PLEASANT PRAIRIE PLAN COMMISSION MEETING
VILLAGE HALL AUDITORIUM
9915 39th AVENUE
PLEASANT PRAIRIE, WISCONSIN
6:00 P.M.
MAY 23, 2016

AGENDA

1. Call to Order.
2. Roll Call.
3. Consider approval of the April 25, 2016 and the May 9, 2016 Plan Commission Meeting minutes.
4. Correspondence.
5. Citizen Comments.
6. Old Business.

   A. **TABLED PUBLIC HEARING AND CONSIDERATION OF A PRELIMINARY PLAT** for the request of SR Mills on behalf of Creekside PP, LLC, the owner of the vacant properties north of the Creekside Crossing development generally located north of 93rd Street and east of Old Green Bay Road for the development of 65 single family lots and 7 Outlots on the remainder of the original Creekside Crossing development to be known as Creekside Terrace.

   B. **TABLED PUBLIC HEARING AND CONSIDERATION OF PLAN COMMISSION RESOLUTION #16-04** for the request of SR Mills on behalf of Creekside PP, LLC, the owner of the vacant properties north of the Creekside Crossing development generally located north of 93rd Street and east of Old Green Bay Road to correct and amend the Village of Pleasant Prairie, 2035 Comprehensive Land Use Plan Map 9.9 and to update Appendix 10-3 of the Village of Pleasant Prairie Wisconsin, 2035 Comprehensive Plan to include said amendments for the proposed Creekside Terrace development. The amendments include: 1) to show the dedicated right-of-way within the "Existing Rights-Of-Way" designation; 2) to show the 7 Outlots as shown on the Preliminary Plat within the Park, Recreation and Other Open Space Lands land use designation and to designate Outlot 5 with an "N" for a Neighborhood Park; 3) to show the wetlands as shown on the Preliminary Plat within the Park, Recreation and Other Open Space Lands with a Field Verified Wetlands land use designation; 4) to show the 65 single family lots as shown on the Preliminary Plat within the Low-Medium Density Residential land use designation; and 5) to remove the Urban Reserve designation on the properties. [Note: The existing retention basins will remain in the Surface Water designation and the location of the 100-year floodplain designation will remain unchanged at this time.]

   C. **TABLED PUBLIC HEARING AND CONSIDERATION OF A ZONING MAP AMENDMENT** for the request of SR Mills on behalf of Creekside PP, LLC, the owner of the vacant properties north of the Creekside Crossing development generally located north of 93rd Street and east of Old Green Bay Road to rezone the proposed 65 single family lots into the R 4.5 Urban Single Family Residential District, to rezone the 7 Outlots (excluding the wetlands) into the PR-1, Neighborhood Park and Recreational District and to rezone the field delineated wetlands into the C-1, Lowland Resource Conservancy District for the proposed Creekside Terrace development. The location of the 100-year floodplain (FPO, Floodplain Overlay District) will remain unchanged at this time.

7. New Business.

A. **PUBLIC HEARING AND CONSIDERATION OF A CONDITIONAL USE PERMIT INCLUDING SITE AND OPERATIONAL PLANS** for the request of Jeff Lambert for Rust-Oleum Corporation to replace a 6,000 gallon nitrogen tank with and 11,000 bulk tank at their facility located at 8105 95th Street in LakeView Corporate Park.

B. **PUBLIC HEARING AND CONSIDERATION OF A ZONING TEXT AND ZONING MAP AMENDMENT** for the request of Jeffery Marlow, President of Lexington Homes Inc., for the proposed development of a 60-unit apartment building with 60 underground parking spaces and 63 surface parking spaces on the property located north of 97th Court and west of 94th Avenue in the Prairie Ridge Development to be known as Skyline Towers. Specifically the property is proposed to be rezoned from the R-9 (UHO), Multi-Family Residential District with an Urban Landholding Overlay District to the R-11 (PUD), Multi-Family Residential District with a Planned Unit Development Overlay District and to create the specific PUD zoning regulations for this development.

C. **PUBLIC HEARING AND CONSIDERATION OF AN AMENDMENT TO CONDITIONAL USE PERMIT #13-03 (4th Amendment)** for the request of Attorney J. Michael McTernan agent for VIDHYA Corp, VIII, Inc., the property owners, to remove condition #54 and allow the BP Amoco gasoline station and convenience store located at 10477 120th Avenue to remain open after June 10, 2017 subject to the terms and conditions of the said Conditional Use Permit and the Settlement Agreement between the Village and the property owners.

D. **PUBLIC HEARING AND CONSIDERATION OF PLAN COMMISSION RESOLUTION #16-07 FOR A COMPREHENSIVE PLAN AMENDMENT** for a portion of the Green Hill Farms Neighborhood Plan related to the development of the property at 8000 128th Street for the Village's new Residential Recycling Center.

E. Consider the request of John Burroughs of Majestic Realty Co., for approval of **Final Site and Operational Plans** for the construction of a 424,164 square foot speculative industrial building on the vacant land located on the east side of 88th Avenue about ¼ mile south of Bain Station Road.

F. Consider the request of John Burroughs of Majestic Realty Co., for approval of a **Certified Survey Map** to subdivide the property located on the east side of 88th Avenue about ¼ mile south of Bain Station Road into two (2) parcels for industrial development.

G. Consider the request of Patricia Soens for approval of a **Certified Survey Map** to subdivide vacant land locked properties and attach the lands to adjacent neighbor properties generally located east of Cooper Road at the 8200 block.

8. Adjourn.

It is possible that members and possibly a quorum of members of other governmental bodies of the municipality may be in attendance in the above stated meeting to gather information; no action will be taken by any other governmental body except the governing body noticed above.

The Village Hall is handicapped accessible. If you have other special needs, please contact the Village Clerk, 9915 39th Avenue, Pleasant Prairie, WI (262) 694-1400.

PLEASANT PRAIRIE PLAN COMMISSION MEETING
VILLAGE HALL AUDITORIUM
9915 39TH AVENUE
PLEASANT PRAIRIE, WISCONSIN
6:00 P.M.
April 25, 2016

A regular meeting for the Pleasant Prairie Plan Commission convened at 6:00 p.m. on April 25, 2016. Those in attendance were Thomas Terwall; Michael Serpe; Wayne Koessl; Deb Skarda; Jim Bandura; Judy Juliana; Bill Stoebig and Brock Williamson (Alternate #2). John Skalbeck (Alternate # 1) was excused. Also in attendance were Michael Pollocoff, Village Administrator; Tom Shircel, Assistant Administrator and Jean Werbie-Harris, Community Development Director.

1. CALL TO ORDER.

2. ROLL CALL.

Tom Terwall:

We have a quorum. Before I move ahead, Mike, you have something you were going to make comments on?

Mike Pollocoff:

I just wanted to introduce the Plan Commission to Brock Williamson. Brock and John Skalbeck had applied for the recent vacancies we had for alternate positions on the Plan Commission. And Brock comes to us from the Park Commission. He's been on that Commission before. So if you want to tell them something about yourself.

Brock Williamson:

I grew up in Lake County, Illinois, and I saw the mistakes they made down there. And so you guys have plenty of land here to do the right thing I can tell. I work in the landscape industry also in Illinois currently. I have a landscape architecture degree from the University of Illinois. So hopefully I can help in some way.

Mike Pollocoff:

[Inaudible]

Brock Williamson:

I'm on the fence. I live on the border. That's why I live so close to the border. I'm on the fence.

Tom Terwall:

Welcome aboard.

Brock Williamson:

Thank you.

3. CONSIDER APPROVAL OF THE MARCH 14, 2016 PLAN COMMISSION MEETING MINUTES.

Judy Juliana:

Move to approve.

Jim Bandura:

Second.

Tom Terwall:

MOVED BY JUDY JULIANA AND SECONDED BY JIM BANDURA TO APPROVE THE MINUTES OF THE MARCH 14, 2016 PLAN COMMISSION MEETING AS RECEIVED IN WRITTEN FORM. ALL IN FAVOR SIGNIFY BY SAYING AYE.

Voices:

Aye.

Tom Terwall:

Opposed? So ordered.

4. CORRESPONDENCE.

5. CITIZEN COMMENTS.

Tom Terwall:

If you're here for an item that appears on the agenda as a matter for public hearing, we would ask that you hold your comments until that public hearing is held. Or if you want to discuss an item that is not a matter for public hearing or is not on the agenda now would be your opportunity to speak. We'd ask you to step to the microphone and begin by giving us your name and address. Anybody wishing to speak under citizens' comments?

6. OLD BUSINESS

Jean Werbie-Harris:

Yes, we'll be taking up Items A and B. And what I'd like to do is have both items be taken up at the same time for one presentation but separate action by the Plan Commission.

Wayne Koessl:

So moved, Chairman, we combine Items A and B for presentation but have separate votes.

Jim Bandura:

Second.

Tom Terwall:

WE HAVE A MOTION BY WAYNE KOESSL AND A SECOND BY JIM BANDURA. ALL IN FAVOR SIGNIFY BY SAYING AYE.

Voices:

Aye.

Tom Terwall:

Opposed? So ordered.

A. Consider approval of two (2) Certified Survey Maps for the request of Martin Hanley, agent for the owner Prairie Place LLC to subdivide the property generally located at the northwest corner of 39th Avenue and Springbrook Court and the property located west of Springbrook Road and north of 101st Street and create two parcels to be dedicated to the Village for park related purposes as part of the Village Green Center development.

B. TABLED PUBLIC HEARING AND CONSIDERATION OF A ZONING MAP AMENDMENT: for the request of Martin Hanley, agent for the owner Prairie Place LLC to rezone a portion of the property generally located at the northwest corner of 39th Avenue and Springbrook Court and a portion of the property generally located west of Springbrook Road and north of 101st Street from the A-2, General Agricultural District to the PR-1, Neighborhood Park-Recreation District. These two areas are proposed to be dedicated to the Village for park related purposes as part of the Village Green Center development.

Jean Werbie-Harris:

Mr. Chairman and members of the Plan Commission and the audience, Item A is to consider approval of two Certified Survey Maps for the request of Martin Hanley, agent for the owner Prairie Place LLC, to subdivide the property generally located at the northwest corner of 39th Avenue and Springbrook Court and the property located west of Springbrook Road and north of 101st Street and create two parcels to be dedicated to the Village for park-related purposes as part of the Village Green Center development.

The second item is a tabled public hearing which we are taking up this evening in consideration of a Zoning Map Amendment, and this is also for the request of Martin Hanley, agent for the

owner Prairie Place LLC, to rezone a portion of the property generally located at the northwest corner of 39th Avenue and Springbrook Court and a portion of the property generally located west of Springbrook Road and north of 101st Street from the A-2, General Agricultural District, to the PR-1, Neighborhood Park-Recreation District. These two areas are proposed to be dedicated to the Village for park-related purposes as part of the Village Green Center development. These items are related and will be discussed at the same time, however separate action is required by the Plan Commission this evening.

The petitioner is requesting approval then of a two Certified Survey Maps. The first CSM is to subdivide the property, again, this is generally located at the northwest corner of 39th Avenue and Springbrook Court. It's identified with the star furthest to the right on the slide. The second property is just to the west of that and west of actually Springbrook Road north of 101st Street. Lots 1 of both CSMs are proposed to be dedicated to the Village for park-related purposes as part of the Village Green Center development. In addition, a Zoning Map Amendment to rezone both of those CSM Lot 1's into the PR-1, Neighborhood Park-Recreational District.

So as you can see, this is a map of the Village Green Center, the aerial photograph actually taken last year. And this is where our proposed Village Green Center is planned to develop over the next couple of years. As part of a development agreement that was entered into last year, one of the negotiated parts was that two parcels of land both identified as Lots 1 on the next slide on the CSMs are proposed to be transferred to us from Prairie Place LLC.

The first CSM subdivides the property located west of 39th Avenue, again, north of the former Springbrook Court into two parcels. Lot 1 is 149,037 square feet with over 350 feet of frontage on 39th Avenue. Lot 2 is 681,572 square feet with over 1,400 feet of frontage on Springbrook Road and over 600 feet on Springbrook Court. Again, Lot 2 of that first CSM is intended to be kept by the developer for development purposes. Lot 1 would be transferred to the Village of Pleasant Prairie and then placed into that PR-1 District.

As a part of this first CSM, a portion of Springbrook Court, which was just to the south, was vacated by Kenosha County through their Resolution#58 and is being incorporated into Lot 1. In addition, a triangle portion of vacant land which was owned by Kenosha County, you can almost see that triangle piece of land immediately to the west of 39th Avenue, that was owned by Kenosha County and was transferred to Pleasant Prairie through Resolution #59. That is also being incorporated as part of Lot 1. For the 2015 Storm Sewer Agreement between Prairie Place LLC and the Village, all of Lot 1 then is being dedicated to the Village for public park-related purposes. And what we tried to do is we tried to square things off based on that portion of vacation of Springbrook Court and that triangle piece of land and the portion of land that's being dedicated by Prairie Place.

The second CSM which is west of Springbrook Road and north of 101th Street is 195,713 square feet with over 300 feet of frontage on Springbrook Road. Per that 2015 Storm Sewer Agreement between Prairie Place LLC and the Village, Lot 1 of this CSM is being dedicated to the Village also for public park-related purposes. And it's also proposed to be rezoned from that A-2, General Agricultural District, into the PR-1, Neighborhood Park-Recreational District.

The staff has drafted additional language to be added to both CSMs as it relates to Dedicated Public Streets and Dedicated Stormwater Drainage, Access and Maintenance Easements. As you

can see on the first CSM, there is a stormwater easement that runs between Lot 1's western edge through Lot 2 to Springbrook Road. There's also a storm easement on the second CSM at the very corner of that Lot 1 by 101st Street and Springbrook Road.

The dedicated public street language pertains to obligations of adjacent land owner as it relates to the street right-of-ways, and the public stormwater drainage easement language is also placed on the CSM relating to ongoing obligations for storm water drainage and land maintenance obligations. Also, there is a note that's being placed on the first CSM, the one that has Lots 1 and 2, which addresses the ongoing rights by the existing utility easement holders that have existing infrastructure under the vacated Springbrook Court. So where Springbrook Court was vacated, the Village staff is not recommending at this time that there be a recorded easement just because it will probably have to be vacated in the near future when we start looking at potential land divisions in the downtown.

So at this point according to the statutes any easement holder that has an easement under that vacated street we have certain rights. So the Village has rights for our sewer, and water infrastructure and gas and electric, telephone they also have easements rights as well. And so we're just placing a note on the CSM that reflects those rights without complicating or encumbering the land with an additional easement at this time.

The owner of Prairie Place LLC, Marty Hanley, he is here this evening if you have any questions. Again, our intent is to continue to implement the illustrative master plan that we have already adopted as part of the neighborhood plan for the Village Green Center. And this Certified Survey Map and the Zoning Map Amendment are just the next in a series of steps towards the implementation of the Village Green Center. This is a public hearing because of the Zoning Map Amendment for the two Lot 1s that are proposed to go into the PR-1. And the staff would like to continue the public hearing at this time.

Tom Terwall:

Is there anybody wishing to speak on this matter? Anybody wishing to speak? Anybody wishing to speak? Seeing none, I'll open it to comments and questions from Commissioner's and staff.

Michael Serpe:

What's our ultimate goal from the Village's standpoint for these parcels?

Jean Werbie-Harris:

What is our ultimate goal? One of the neighborhood plans that we had done as well as the illustrative master plan identifies that a portion, for example the Lot 1, Lot 2 which is the first CSM, that they would be public park in that area. There would be stormwater management through some type of retention basin. Generally we have not planned it all out yet. That's what our next step will be to do a detailed park plan. But there could be a gazebo, and there could be some other type of park-related structures and gathering spaces and so on and so forth. So one of our next steps will be to do a detailed park plan for that Lot 1.

The second one the same thing. We've got some generalized concepts as part of the Village Green Neighborhood Plan and the illustrative master plan that shows a stormwater basin, a retention basin as well as public park areas, possibly a band shelter, different things. But, again, it's really now once the land comes under the Village's ownership it will be the Village's job then to take it to the next level and to do some very detailed park planning for those two areas and to be able to accommodate the stormwater management for that area in those park areas.

Michael Serpe:

So other than the stormwater detention we have there now we're going to put in more basins?

Jean Werbie-Harris:

Again, the basins that have been constructed to date are based on existing conditions out there as well as the modifications that were just recently made. So when and if there is additional impervious surface, new development in that area, likely at least the one on the west side, the Lot 1 west of Springbrook, that will definitely need to be enlarged and put into a more permanent type basin because you don't see a permanent retention basin there today.

Michael Serpe:

Move approval of the Certified Survey Map.

Jim Bandura:

Second.

Tom Terwall:

ANY OTHER COMMENTS OR QUESTIONS? I HAVE A MOTION BY MICHAEL SERPEAND A SECOND BY JIM BANDURA TO SEND A FAVORABLE RECOMMENDATION FROM THE VILLAGE BOARD TO APPROVE THE CSM SUBJECT TO THE TERMS AND CONDITIONS OUTLINED IN THE STAFF MEMORANDUM. ALL IN FAVOR SIGNIFY BY SAYING AYE.

Voices:

Aye.

Tom Terwall:

Opposed? So ordered. Jean, do you have further comments on B, or are you just looking for a motion?

Jean Werbie-Harris:

Looking for a motion.

Michael Serpe:

Move approval of Zoning Map Amendment.

Wayne Koessl:

Second.

Tom Terwall:

MOVED BY MICHAEL SERPE AND SECONDED BY WAYNE KOESSL TO SEND A FAVORABLE RECOMMENDATION TO THE VILLAGE BOARD TO APPROVE THE ZONING MAP AMENDMENTS AS PRESENTED. ALL IN FAVOR SIGNIFY BY SAYING AYE.

Voices:
Aye.

Tom Terwall:

Opposed? So ordered.

7. NEW BUSINESS

A. PUBLIC HEARING AND CONSIDERATION OF A CONCEPTUAL PLAN for the request of William Bohne, P.E. of Jacob & Hefner Associates, agent for Riverview Group LLC owner of the property generally located south and east of 110th Street and 116th Avenue for the development of three (3) industrial buildings for the proposed Riverview Corporate Park (North).

Jean Werbie-Harris:

Mr. Chairman and members of the Plan Commission, the Item A is the public hearing and consideration of a Conceptual Plan for the request of William Bohne, P.E. of Jacob & Hefner Associates, agent for Riverview Group LLC, owner of the property generally located south and east of 110th Street and 116th Avenue for the development of three industrial buildings for the proposed Riverview Corporate Park North.

So I'd like to begin the presentation on this project with some important assumptions. The following report that I'm reading for you is a review of only the Conceptual Plan. This report assumes that the existing Development Agreement, zoning and TID #2 Project Plan remain in place as currently approved and executed. Any requested changes to these items should be formally submitted to the Village using the appropriate forms for any such applications. These staff notes do not envision any changes to the above referenced items. In the event that any of the above referenced items are amended or changed, additional requirements to those provided herein may be required.

So with respect to our Conceptual Plan previous Village approvals that impact this project:

- On June 17, 2013, the Village Board adopted Ordinance #13-24, which rezoned the developable portions of Riverview Corporate Park in addition to other parcels into the M-5 District. The M-5 Zoning District reflects an enhancement of the Village's public policy of sound and diversified economic development. While there have been and still are sufficient economic opportunities for the construction of warehouses and distribution facilities in the existing corporate parks in the Village, the Village believes that it is important to conserve land resources and economic infrastructure in order to assist in providing more employment in the Village. As such, the M-5 District serves to promote and encourage production, manufacturing, and office related employment as the primary uses in the District, with warehousing and distribution to be ancillary to the manufacturing and other permitted uses in this District.

  The M-5 district encourages and promotes more intensive land uses which in turn would promote greater employment opportunities in proximity to both I-94 and State Highway 31. The M-5 District allows for manufacturing, assembly, office, and research and development uses with limited warehouse and distribution uses within an enclosed structure where no high hazard uses are allowed, and the method of manufacturing is not injurious to the point of constituting a nuisance to the occupants of adjacent properties. This District also allows for office parks or individual office buildings and ancillary uses which may or may not include space for manufacturing, assemblies, or research and development but provides direct services to the employees or customers or other uses in the area.

- The second approval for this area and project, on September 13, 2013 the Village Board conditionally approved a Master Conceptual Plan for the development of an approximate 254 acre corporate business park that was generally located east of I-94 south of 110th Street and north of 122nd Street. This included Tax Parcel Numbers 92-4-122-303-0101, -304-0200, -311-0200,-312-0305 and-312-0310 to be known as Riverview Corporate Park. This Master Conceptual Plan had provided the developer with early input from the Village and the abutting neighbors as they continued to prepare more detailed plans and to work through the Village's development review process. The Master Conceptual Plan was designed to accommodate five to seven corporate facilities for office, research and development, manufacturing, production and assembly operations. The buildings were proposed to range in size from about 87,000 square feet to 428,000 square feet and to have open space design features utilizing the prairie and wetlands to transition into the adjoining areas.

  Riverview Corporate Park is intended to accommodate the business expansion of corporations from both the Chicago and Milwaukee markets. It has immediate access to the four-way interchange at State Trunk Highway 165 and I-94. It is 30 minutes from General Mitchell International Airport and 45 minutes from Chicago O'Hare International Airport. From I-94, the park has good access to the interstate highway system for servicing the entire Midwest region. The development of the Corporate Park has an ultimate estimated employment of 1,100 people at full build-out.

- Next approval, on August 18, 2014, the Village Board adopted Ordinance # 14-27 to amend the Lakeview West Neighborhood Plan 13 including a portion of the River Woods

Neighborhood Plan 24 of Appendix 9-3 and the 2015 Land Use Plan of the Village's Comprehensive Plan. And this is for the area generally located between the 9300 block of 120th Avenue which is the East Frontage Road to the Wisconsin/Illinois state line and east of I-94. The Neighborhood Plans identify potential land uses, road layouts, signal locations and access points for future industrial and commercial development along this portion east of the I-94 based on the 2013 Master Conceptual Plan.

- And then the next approval or the final approval until today, on July 21, 2014, the Village Board entered into a Development Agreement with Riverview Group, LLC which specifically outlined the timing of the Riverview Corporate Park North development; the acknowledgment of the existing M-5, Production and Manufacturing Zoning District for the referenced property; the Village's agreement and obligation regarding the expenditure of tax increment funding towards the financing of specific infrastructure improvements; the developer's requirement to present Letters of Credit and the reimbursement obligations to the Village; the developer's requirement to officially notify the Village of its notice to proceed; and other obligations as required by the Developer and the Village as detailed in the Development Agreement.

The Village has nearly completed the public infrastructure designs including sanitary sewer, water, storm sewer, roadway and curb and gutter plans for the extension of the 116th Avenue to accommodate the Riverview Corporate Park North area. Again, in looking at your slides, a good map that Tom has up is that neighborhood plan. It shows that this Riverview area is north of Highway 165 just to the south/southeast of the Premium Outlets development just south of 116th Avenue extended.

The Village has also recently completed a Traffic Impact Analysis or TIA by analyzing the existing and future traffic and transportation system requirements and roadway network to service the Riverview Corporate Park area and the land within the LakeView West Neighborhood Plan area.
The developer has completed environmental delineations on the site including the locations of the wetlands, 100-year floodplain areas, primary environmental corridors, ordinary high water marks and also has incorporated these areas into a more detailed Conceptual Plan for Riverview Corporate Park which we'll be discussion further this evening.

Conceptual Plan: At this time the petitioner is requesting approval of an updated Master Conceptual Plan for the area north of the creek, Riverview Corporate Park North identified as part of Tax Parcel Numbers 92-4-122-303-0101 and 92-4-122-304-0200. The property is proposed to be divided by Certified Survey Map into three building sites and a number of outlots. Pursuant to our Land Division and Development Control Ordinance 395-56, as long as the lots are over 1 1/2 acres in size and aren't used for residential purposes, then they can create more than four lots in any five year time frame.

The Conceptual Plan includes the following three speculative buildings each on their own lot:

- Building A which is located to the north/northwest is proposed to be 105,000 square feet and it's on 0.93 acres of a site.
- Building B which is directly south of that is proposed to be 166,090 square feet, and it would be on a 10.1 acre site.

- Building C is proposed to be 120,065 square feet with potential of a 101,000 square foot expansion, and that would be located on an 11.45 acre site.

Roadways within the Conceptual Plan: Based upon the Development Agreement, 116th Avenue, again that's the main north/south road on the west end of this development, is proposed to be extended as a public roadway by the Village with full urban improvements including municipal sewer, water and storm sewer, and it will terminate at this time in a cul-de-sac just north of the creek.

As shown on the Conceptual Plan, 111th Street does not currently meet Village standards, so it would be considered a private street that provides the required access to the proposed building sites. So, again, 111th Street is the east/west road between Building A and Building B that terminates in a cul-de-sac. The municipal sanitary sewer and water proposed in 111th Street shall be installed at the developer's cost. A separate Development Agreement will be required for these required public improvements within the private street.

The public improvements in 110th Street, and 110th is the street that would border this entire area on the north end of the property. It would be required to be constructed at a future date, unless that requirement is waived or modified by the Village Board. Actually, a portion of 110th Street does extend to the east, and actually a portion of 110th still does exist extending to the west into the Premium Outlets development. But at this time there are no public improvements in 110th Street.

Environmental Features: As noted above, all of the environmental features have been identified and three small areas of the primary environmental corridor that is exclusive of wetlands and 100-year floodplain is proposed to be removed for the installation of the required fire lanes and parking areas. These are some very small areas that are identified in the pink color. Primarily these are some just wooded areas of the site.

Stormwater: Storm water facilities are proposed to be located within outlots north and east of Building C in non-environmentally sensitive areas. They're also identified on the Conceptual Plan on A, B and C in the blue designation.

Zoning: The developable land within the proposed Riverview Corporate Park North is zoned, M-5, Production Manufacturing Zoning District. This district reflects an enhancement of the Village's public policy of sound and diversified economic development. While there have been and still are sufficient economic opportunities for the construction of warehouses and distribution facilities in the existing Corporate Parks in the Village, the Village believes that it is important to conserve land resources and economic infrastructure in order to assist in providing more employment in the Village.

And, as such, this area has been designated as M-5 which serves to promote and encourage production, manufacturing, and office related employment as the primary uses in the District. The district also allows for office parks and individual office buildings and ancillary uses which may or may not include space for manufacturing assemblies or research and development but provides direct services to employees or customers or other uses in the area. It is anticipated that these areas would be developed in an attractive corporate park-like setting with landscaping, consistent signage, and similar or compatible building materials and designed to present an

integrated image to the customers. The Riverview Corporate Park development must comply with all Village Ordinances and requirements and specifically with respect to the requirements of the M-5 District.

The district requires that each lot be a minimum of two acres in size, that they have a minimum lot frontage of 150 feet on a public street which could be reduced to 100 feet on a cul-de-sac or a curve. Their open space requirement is 25 percent minimum. Street setback 65 feet from any arterials, 40 feet from non-arterials depending on whether 110th and 111th Street if they're public or private it would still be a non-arterial or 40 foot setback. Side and rear setbacks would be 45 feet minimum. Shore yard setbacks 75 feet minimum. Wetland setback 25 feet minimum. Parking setbacks 20 feet from all property lines, 25 feet from all wetlands on the property. The shared access is a 20 foot green space between lots of Buildings B and C would be allowed. Fire lanes shall be all weather, paved surface roadways with a minimum width of 30 feet and setbacks at least the maximum height of the building adjacent to the fire lane but not to exceed 50 feet from the building unless otherwise approved by the Fire and Rescue Chief.

Other specific M-5 design criteria include that warehouse and distribution auxiliary uses which are allowed in the M-5 District uses are classified as Storage Group S in Section 311 of the 2006 IBC, that are not classified as a Group H Hazard pursuant to Section 307 of the 2006 IBC shall be auxiliary permitted uses in a building in the M-5 District, provided that all of the following limitations shall be satisfied:

(a) Such uses are auxiliary to the permitted manufacturing or research and development uses, in that they are located in the principal building;
(b) All warehouse and distribution auxiliary permitted uses in a principal building together shall not occupy more than 30 percent of the gross floor area of such building, except that the building occupant's storage of raw materials and finished products assembled or produced on site shall be exempt from this 30 percent requirement;
(c) The building façade area of dock doors is limited to a total of 25 percent of the building exterior walls; and
(d) Such uses are subject to the requirements of Article IX and all other applicable provisions of this chapter and of other Village ordinances and codes.

So next what I'd like to talk about are the zoning related approvals or also known as the next steps of what needs to be approved.

1. Zoning Map and Text Amendments: Since 111th Street is being shown as a private street, the property will be required to be developed as a Planned Unit Development or PUD to allow for the lot for Building C and outlots for the stormwater facilities to be located on a parcel without the required lot frontage on a public street. The developer shall specify in the application which dimensional variations to the ordinance that are being proposed to be amended and the community benefit to be considered by the PUD. In addition to the creation of a PUD Overlay Ordinance for this development and rezoning of the properties into the PUD, the petitioner shall also request to amend the Zoning Map to correctly identify the field delineated environmental features in the C-1, Lowland Resource Conservancy District, and the C-2, Upland Resource Conservancy District. Any non-wetland or non-woodland areas within the outlots shall be rezoned into the PR-1, Neighborhood Park-Recreational District. An illustration and legal

descriptions of all zoning districts shall be submitted as part of the Zoning Map Amendment application.

However, if 111th Street is proposed to be constructed by the developer as a public street, a separate development agreement will need to be entered into between the developer and the Village. At the developer's cost, the developer would need to design and construct 111th Street in accordance with the Village's public infrastructure specifications and regulations. Note that if 111th Street is built as a public street and dedicated to the Village, the PUD Zoning Overlay would not need to address the M-5 requirement of lot frontage on a public street.

2. Comprehensive Plan Amendment: The Village's 2035 Comprehensive Land Use Plan Map 9.9 will also need to be amended to correctly identify the location of the field delineated wetlands and primary environmental corridors as modified so that the Village's Zoning Map and the Land Use Plan Map are consistent. There's just a note, a reminder to the developer that the Plan Commission will conduct the public hearing for the Comprehensive Plan Amendment, and a 30 day public notice is required and the Plan Commission makes recommendation to the Village Board. An illustration and legal description of all land use plan amendments shall be submitted as part of the Zoning Map Amendment application.

3. Certified Survey Map/Variance/Development Agreement: A Certified Survey Map is required to be submitted for the Village's review, approval and recording to dedicate the public right-of-way; to subdivide the property; to identify Dedication and Easement Provisions, Restrictive Covenants and other developer notes and to define the developer maintenance obligations and site restrictions as required. Any public improvements that will be installed pursuant to the Development Agreement for the Riverview Corporate Park North shall be designed, constructed and installed prior to the development of any specific site, unless there is municipal water available for fire protection and adequate site access as determined acceptable by the Village for both inspection purposes and emergency services accessibility.

   The existing Development Agreement sets forth the Village's obligations and the construction requirements for 116th Avenue required public improvements north of the creek within the development sites. A separate Development Agreement would be required along with the associated public infrastructure plans, specifications, permits and approvals, executed contracts, performance and payment bonds, construction related services which includes field staking, inspection contract administration, and financial security for the installation of said 111th Street improvements if it were constructed as a public road. Any new Development Agreement would need to be reviewed and approved by the Village Plan Commission and Village Board at the same time that the required CSM is considered.

   Prior to consideration of a new Development Agreement for 111th Street being a public road, the Village must approve the request, review and approve the engineering plans, specifications, contract documents, etc. Upon the Village's approval of the engineering plans, specs and contract documents, the public sanitary sewer plans would require the following approvals and permits in the following order:

1. City of Kenosha Water / Wastewater Utility approval.
2. SEWRPC "208" water quality approval.
3. Wisconsin DNR approval

Upon the Village's approval of the engineering plans, specs and contract documents, the public water mains will require the following approvals and permits:

1. City of Kenosha Water / Wastewater Utility approvals.
2. Wisconsin DNR approvals.

In addition, a variance petition shall be submitted to the Village Board for an exception from Section 395-58 E of the Village's Land Division and Development Control Ordinance, which requires that public streets be constructed the full distance of the boundaries of the parcel being divided. Specifically, I'm referring here to 110th Street which is considered a boundary street for proposed Building A and no 110th public improvements are being proposed to be constructed at this time. So that is something that would need to be considered. This staff report as a reminder does not review or recommend approval of any amendments to the Development Agreement and only reviews the Conceptual Plan as submitted to the village.

4. Corporate Park Declaration and By-Laws Documents: The petitioner is requesting that Riverview Corporate Park North as shown on the Conceptual Plan and as defined in the existing Development Agreement be developed as a unified industrial/commercial development and specific declarations, restrictions and development standards be approved. Attached is a draft of the By-Laws and the Declaration of Development Standards and Protective Covenants for Riverview Corporate Park North. These documents will need to be finally reviewed by staff and then finalized and then recorded to establish the Riverview Corporate Park North regulations after the Village's review and conditional approval.

5. Preliminary Site and Operational Plan: The developer has indicated that they would like to begin mass grading of the Riverview Corporate Park North area which would include the installation of the stormwater facilities and underground public and private infrastructure to allow three building pads be created. For the Village to allow work to commence, Preliminary Site and Operational Plans which is basically our complete civil plans need to be submitted, reviewed and approved by the Village Plan Commission, prior to the issuance of the required erosion control permit or the Wisconsin DNR NOI permit or the work in the right-of-way permit.

Keep in mind the next steps, items 1 through 4 above that I just talked about, will need to be approved prior to or at the same time that the Preliminary Site and Operational Plans are being considered by the Plan Commission. Again, prior to issuance of any erosion control permit, any work, grading, removing brush, parking lots/fire lanes within 75 feet of the ordinary high water mark of a navigable waterway will require a Stipulated Shoreland Permit as well to be issued by the Village which does require a 20 day notice.

6. And, finally as part of this process to implement the Conceptual Plan, Final Site and Operational Plans: Final Site and Operational Plan approval by the Plan Commission is required for each site. Site and Operational Plans shall include a detailed written narrative that explains the proposed development specifically related to the proposed uses, use, employment, traffic, etc.; the industrial waste surveys, site surveys of existing conditions; site development plans; building construction plans; lighting, landscaping and signage plans; and all other items as required pursuant to Chapter 420 Article IX of the Village Zoning Ordinance. If a Conditional Use Permit is required, then a Conditional Use Permit shall also be applied for and shall be considered by the Plan Commission at the same time that Site and Operational Plans would be considered at a regularly scheduled meeting of the Plan Commission.

With that I would like to continue the public hearing. I'd like to introduce representative from Riverview to make an additional presentation to talk a little bit about their project. I'm not going to read through all of the staff comments at this time or conditions pertaining to the Conceptual Plan because they really have to do with the details of that Conceptual Plan. But I would like to introduce Jeff. Would you like to come up? And for the record we'll need your name and address for the record.

Jeff Raduechel:

Hi, I'm Jeff Raduechel representing Venture One. I live at 1316 40th Court in Kenosha. I'm with Venture One, and I head up development for the firm as its Senior Vice President of Development Services. We're here, and thank you, Jean, for a complete description of the project. We're here to introduce Phase 1 as you see, which is a three building scheme. Building C has been designed around a particular user, but could also become a speculative building as Jean mentioned. Our intention is to do the site work and grading for all three buildings at one time. And then it remains to be seen as to what sequence the three buildings would actually be constructed.

You might note that the Phase 1 as proposed is smaller than was originally talked about a few years ago when this project was introduced. Basically that's because upon further engineering study we learned that there are more extensive PEC areas, floodplains and wetlands. Originally we had thought that we might be able to get approval to fill some more additional wetlands. And we were also delayed, frankly, in this wetland fill approval procedure. And that took us about 16 to 18 months to get through. And the Corps of Engineers required us to submit to them the project as a whole which included Phase 1 and 2 before they would talk about any specific wetlands.

I just wanted to mention, too, I'm here tonight will Bill Bohne who is a principal with Jacob & Hefner. He's our civil engineer. And he's been working on this project right from the inception. I actually came into it about a year ago when I joined Venture One after having been with several other firms based in the Chicago area. As I mentioned I live in Kenosha, and I've been commuting to Chicago for about 25 years. So I'm here to answer any questions. Bill is here to answer any questions, too, related to this specific development. Again, we're focusing on Phase 1. And Phase 2 would follow in the future as more of those details get flushed out.

Tom Terwall:

Thank you. Jean?

Jean Werbie-Harris:

I just want to mention that there is a typo on the slide. That Building A that's an 8.93 acre site, not .93. So in the staff memo on page 3 and on the slide Building A would be a 105,000 square foot building on an 8.93 acre site.

Tom Terwall:

Thank you. This is a matter for public hearing. Is there anybody else wishing to speak? Anybody else wishing to speak? I'll open it up to comments and questions from Commissioners and staff. Go ahead, Jim.

Jim Bandura:

You mentioned that you had 18 months with the Army Corps of Engineers, and that was for the whole site. So what you have right now you're good to go on this.

Jeff Raduechel:

Yes.

Jim Bandura:

What about the Phase --

Jeff Raduechel:

We initially were thinking that we would attempt to fill some of the wetland areas in the Phase 1 area. In the course of the initial conversations with the regulators it became apparent that that wasn't going to be a feasible option. And so at that point we centered on a design that was intended to fit the buildings in and around all those various features and avoid impacts with them. Subsequently at the end of this 18 month period we were successful in obtaining a fill permit for a wetland that occurs on the Phase 2 site to the south which is south of the creek. So as it stands we're not impacting any wetlands or floodplains as part of this. But as Jean mentioned we would have some minor impacts in terms of coordinating the actual PEC delineation with the actual boundaries that exist on the site.

Michael Serpe:

You put your feelers out. Do you have a pretty good feeling for this area to be good for manufacturing?

Jeff Raduechel:

Well, yes we do. And we have a couple of lively tenants right now that we're in active discussions with. And then we're also in discussions with Capitol Partners about the other two buildings, Buildings A and B, to be able to construct those at the same time. There's an appetite to put more spec product into the marketplace. So we do feel confident about it.

Michael Serpe:

Good.

Tom Terwall:

Anybody else? Motion then to send a favorable recommendation.

Judy Juliana:

Motion to send a favorable recommendation please.

Bill Stoebig:

I'll second.

Tom Terwall:

IT'S BEEN MOVED BY JUDY JULIANA AND SECONDED BY BILL STOEBIG TO SEND A FAVORABLE RECOMMENDATION TO THE VILLAGE BOARD TO APPROVE THE CONCEPTUAL PLAN SUBJECT TO THE TERMS AND CONDITIONS OUTLINED IN THE STAFF MEMORANDUM. ALL IN FAVOR SIGNIFY BY SAYING AYE.

Voices:

Aye.

Tom Terwall:

Opposed? So ordered. Item B, Jean.

Jean Werbie-Harris:

I would ask that Items B and C be taken up at the same time and separate actions.

Jim Bandura:

So moved.

Michael Serpe:

Second.

Tom Terwall:

MOVED BY JIM BANDURA AND SECONDED BY MICHAEL SERPE TO COMBINE ITEMS B AND C FOR PRESENTATION PURPOSES BUT REQUIRE TWO SEPARATE VOTES. ALL IN FAVOR SIGNIFY BY SAYING AYE.

Voices:

Aye.

Tom Terwall:

Opposed? So ordered.

B. Consider the request of John Burroughs of Majestic Realty Co., for approval of Preliminary Site and Operational Plans for the mass grading, installation of underground utilities and footings and foundations for the construction of a 424,164 square foot speculative industrial building on the vacant land located on the east side of 88th Avenue about ¼ mile south of Bain Station Road.

C. Consider the request of John Burroughs of Majestic Realty Co., for approval of a Development Agreement and related plans for the off-site public improvements for the development of a 424,164 square foot speculative industrial building on the vacant land located on the east side of 88th Avenue about ¼ mile south of Bain Station Road.

Jean Werbie-Harris:

Mr. Chairman and members of the Plan Commission, Item B is to consider the request of John Burroughs of Majestic Realty Company for approval of a Preliminary Site and Operational Plans for the mass grading, installation of underground utilities and footings and foundations for the construction of a 424,164 square foot speculative industrial building on the vacant land located on the east side of 88th Avenue about a quarter mile south of Bain Station Road.

And Item C, consider the request of John Burroughs of Majestic Realty Co., for approval of a Development Agreement and related plans for the off-site public improvements for the development of a 424,164 square foot speculative industrial building on the vacant land located on the east side of 88th Avenue about a quarter mile south of Bain Station Road. Again, these items are related and I'll be making one presentation, however separate action will be required.

The Village had been working with the developer for the past several years, and to date the following approvals have been obtained for the development of the Majestic site. Again, this is a site that's on the east side of 88th Avenue as shown on the slide about a quarter mile south of Bain Station Road.

1. On October 15, 2012, the Village of Pleasant Prairie Board of Trustees approved the following requests related to the development of the property generally located south of Bain Station Road on the east side of 88th Avenue. The parcel is identified as Tax Parcel Number 92-4-122-162-0301 in the Village. And the following approvals included.

   - Village Comprehensive Plan Ordinance #12-33 was approved by the Village Board on October 15, 2012 to amend the Pleasant Prairie 2035 Comprehensive Land Use Plan Map 9.9 and to amend a portion of the Pleasant Farms Neighborhood Plan.

   - A Conceptual Plan was conditionally approved by the Village Board also on that date October 15, 2012 for the development of a proposed 1.2 million square foot warehouse/distribution facility building to be known as the Majestic Center.

   - Zoning Map Amendments Ordinance #12-34 was approved by the Village Board on October 15, 2012 to rezone a portion of the property that was zoned A-2, General Agricultural District, and it was placed into the M-2, General Manufacturing District. Portions of the property within the 100-year floodplain that were zoned FPO, Floodplain Overlay District, and the C-1, Lowland Resource Conservancy District, remained unchanged at this time. Upon completion of detailed wetland field delineation and the 100-year floodplain field survey including floodplain boundary adjustments additional amendments would be required to the 2035 Comprehensive Land Use Plan as well as the Zoning Map.

2. Floodplain Boundary Adjustment was conditionally approved by the Plan Commission on April 8, 2013 but it has not yet been considered by the Village Board since the plans need to be modified and approval from the Wisconsin DNR is still pending. The floodplain boundary adjustment proposes to remove approximately 98,173 cubic feet of floodplain and to create approximately 99,144 cubic feet of floodplain to compensate for the floodplain being filled. Note this work has now commenced and will be completed this year-2016.

3. Site and Operational Plans were conditionally approved by the Plan Commission on May 13, 2013 for the construction of a 1,180,480 square foot warehouse/distribution building on the property. The Plan Commission granted several extensions to that approval back in May of 2013. However, the petitioner has decided to be a little bit more flexible and has decided to modify the building size for a little bit smaller building and wants to commence a speculative building on the northern portion of the property.

4. Zoning Map Amendment, and this is Ordinance #13-18 and Zoning Text Amendment, PUD #13-19, these were both approved by the Village Board on May 20, 2013. The Zoning Map Amendment rezoned the property to include a PUD, Planned Unit Development Overlay District. The existing M-2, General Manufacturing District, C-1, Lowland Resource Conservancy District, and the FPO, Floodplain Overlay District, all remained unchanged. The Zoning Text Amendment is attached to your packets, and it created the specific PUD requirements for the property.

At this time, the petitioner is requesting to obtain Preliminary Site and Operational Plan approvals to begin the development of the northern portion of the property. As I mentioned, they're looking to put a 424,164 square foot building and associated on-site improvements, along with off-site County Trunk Highway H roadway improvements as specified in the draft Development Agreement. The petitioner is tentatively planning to construct a second building on the southern portion of the property in the future.

Preliminary Site and Operational Plans: The Preliminary Site and Operational Plans will allow the petitioner to begin mass grading, to install underground utilities and to construct footings and foundations for the construction of that 424,164 square foot speculative industrial building. The building has been designed so that it can be easily divided into as many as four tenants. The building design is a cross dock facility with trailer storage as shown on the plans. The design provides for secured truck courts in the event that future tenants require that feature.

Majestic has coordinated their efforts with the Village's Public Work's Department to provide for a 14 foot gravel access maintenance path up to and over the top of the Village's sanitary sewer main that runs diagonally through the property. And it is associated with a Dedicated Sanitary Sewer, Access and Maintenance Easement that was previously granted to the Village.

Wetlands: The wetlands were field delineated on the site in 2008 by Wetland and Waterway Consulting as approved by the Wisconsin DNR on December 19, 2008. The wetland areas shall be shown on the Certified Survey Map as being within a Dedicated Wetland Preservation and Protection, Access and Maintenance Easement. Legal descriptions of the Wisconsin DNR approved wetland delineations shall be shown on the CSM.

Shorelands: The Jerome Creek is located adjacent to the property to the east. This creek has been determined to be a navigable waterway. The location of the ordinary high water mark shall be field identified by the Wisconsin DNR and shown on the plans and the CSM. The plans shall also show the location of the 75 foot ordinary high water mark setback and the 300 foot shoreland jurisdictional area. The property owner has obtained the Village's Stipulated Shoreland Permit for the grading within 75 feet of the ordinary high water mark.

Floodplains: The location of the 100-year floodplain associated with the Jerome Creek were field delineated pursuant to the DFIRM Map panel 191D dated June 19, 2012 and the associated table for the Jerome Creek which identifies the 100-year floodplain elevations. As noted above, the Floodplain Boundary Adjustment was conditionally approved by the Village, the DNR and FEMA. The floodplain boundary adjustment will remove approximately 98,173 cubic feet of floodplain and to create approximately 99,144 cubic feet of floodplain to compensate for the floodplain being filled. The 100-year floodplain area after the amendment shall be shown as being located within a Dedicated Floodplain Preservation and Protection, Access and Maintenance Easement area on the CSM. As noted above, the 100-year floodplain work will be finalized in 2016. Upon its completion, a Zoning Map and Text Amendment will be required to reflect that adjustment.

Woodlands: A tree survey has been completed along the north property lines, and these areas shall be protected and preserved. The woodland areas to be protected will be located in a Dedicated Woodland Preservation and Protection, Access and Maintenance Easement as shown

on the CSM. The grading and berming along the north property line east of the cemetery shall also be constructed in a manner to protect the drip line of the trees.

Building Setbacks: This an M-2 District, so it needs to meet the minimum setbacks. For street setback a minimum of 65 feet from County Trunk Highway H; side and rear setbacks of 45 feet minimum, shore yard setback of 75 feet minimum from the ordinary high water mark of Jerome Creek; wetland setback of 25 feet from the wetlands. There is no setback to the 100-year floodplain, however no structures shall be located within the 100-year floodplain.

Setback for parking areas, and this includes parking spaces, maneuvering lanes and fire lanes as measured from the back of curb shall meet the following minimum requirements:

- Industrial area parking setback: 90 feet minimum to the future residential lot area in the northeast corner of the site.
- A minimum of 20 feet from the front or adjacent to County Trunk Highway H.
- A minimum of 20 feet from other private roadways and drives to the side and rear lot lines with the exception to the east property line wherein a zero setback is proposed and has been approved as part of a PUD.
- A minimum of 70 feet from the north property line at the northeast end abutting future residential development.
- In addition, parking areas shall not be located within any easements unless express written approval is allowed by the easement holder.

And, again, these are all things that we had talked about previously and were included in that PUD.

Site Access and Parking: A Traffic Impact Analysis or a TIA has been prepared by the developer's consultant and reviewed by the Village and Kenosha County. A copy of the consultant's recommendations indicates that both deceleration/acceleration lanes and a by-pass lane shall be installed by the Majestic. Based upon the traffic study completed, Majestic's cost contribution for the future Bain Station/County Trunk Highway H intersection improvements roundabout is $163,500.00. This amount is payable to the Village as a condition precedent to the issuance of a building permit. These funds in turn will be transferred to Kenosha County.

Employee, client, visitor vehicular and truck access to the site will be a driveway from 88th Avenue. All parking areas and maneuvering lanes, fire lanes including the truck court, shall be improved with concrete vertical curb and gutter. The plan includes 292 automobile parking spaces including 12 handicapped accessible spaces and 111 trailer spaces. The truck court face north and south which is particularly beneficial to the Village since we won't be seeing all those trucks when driving north/south on H. They'll be facing north and south instead.

Pursuant to the Village Zoning Ordinance the minimum on-site parking spaces for a manufacturing use requires five spaces, plus one space per employee on the largest work shift and the required number of handicapped accessible parking spaces per the State Code. The minimum on-site parking spaces for a warehouse/distribution center is based on one space for every two employees during any 12 hour period and the required number of handicapped accessible parking spaces pursuant to the State Code. At the time that the proposed building size, use and number of

employees are known, adequate on-site parking shall be re-evaluated and re-determined for approval.

The final number of required parking spaces will be determined based on the actual tenants. However, the number of parking spaces that have been provided to date for the future tenants has been approved and is shown on the site plans.

Public Sewer and Water: The development shall be served by municipal or public sanitary sewer and water. Municipal water is located in 88th Avenue, and public sanitary sewer is located within an easement that runs diagonally through the site. The location of the parking areas, fire lanes and maneuvering lanes may be located over the sanitary sewer easement, but it's subject to certain conditions as imposed by the Village. Also, a fourteen foot wide gravel pathways have been installed and will be reinforced over the sanitary sewer main. The Village must be able to obtain easy access to and over the sewer main on the gravel pathways for maintenance purposes.
Open Space, Storm Water Retention and Landscaping: The M-2 District requires that at a minimum, 25 percent of the site must be open space. Within the amount of 100-year floodplain and proposed storm water facilities there is more than 25 percent of the site that maintain itself as open space; however, verification of that area and percentage of open space, all those things will need to be shown on page one or sheet one of the plans.

Development Agreement: The petitioner is responsible for the required public improvements, construction of a bypass lane and acceleration/deceleration lanes, gravel shoulders, pavement markings, traffic signage and related road repairs within the 88th Avenue or County H within the right-of-way; installation of storm sewer improvements; making hydrant and valve adjustments; making sanitary manhole adjustments and installation of a new sanitary manhole; installation of public street trees and street terrace restoration as well as on-site installation of that 14 foot wide gravel sanitary sewer maintenance path. And this is all pursuant to the Village and County requirements. The developer will be responsible for providing the financial security, a one year letter of credit and insurance certificates for all required public improvements, and for costs associated with the field staking, inspection and contract administration. All contractors undertaking the required public improvements shall be pre-approved by the Village.

Certified Survey Map: A draft CSM has been submitted for initial review. The staff will provide comments probably this next week regarding that CSM. A final CSM will be required for the site development prior to approval of the Final Site and Operational Plans, and it will also used as an exhibit to the Development Agreement. The CSM shall identify the dedication of additional right-of-way, dedicated public street area, as required along County Trunk highway H per Kenosha County's requirements of 60 feet from the centerline and the dedication of the following easements: 1) Dedicated Storm Water Management Facilities/Retention Ponds, Access and Maintenance Easements; 2) relocation or expansion of the existing Dedicated Public Sanitary Sewer, Access and Maintenance Easement; 3) Dedicated Landscape, Berm and Plantings, Access and Maintenance Easement along County H; 4) Dedicated Wetland Preservation and Protection, Access and Maintenance Easements; 5) Dedicated Floodplain Preservation and Protection, Access and Maintenance Easement areas; and 6) Woodland Preservation and Protection, Access and Maintenance Easement areas.

So with that I would like to introduce Adam Artz is here representing Majestic if we have any questions of concerns. Again, the two items before you this evening are the Preliminary Site and

Operational Plans. Again, that's for that mass grading, installation of utilities, footings and foundations. And also the development agreement for the public improvements to be completed in County Trunk Highway H as well as the public onsite gravel path that is on the site.

Adam Artz:

Good evening. Adam Artz, Pinnacle Engineering Group, 15850 West Bluemound Road, Brookfield, Wisconsin. This project has been a long time coming. We've seen the latest iteration. This one is actually going full speed ahead. There's contracts being awarded predicated on approvals. And you'll see that they're moving out there very quick. I'm here to answer any technical questions you may have. I'll open it up to you guys.

Tom Terwall:

Thank you. Comments or questions?

Michael Serpe:

I have a question. I think you better come up. We're glad to see this is moving forward, and it's been a while. Just a couple things I haven't heard in the presentation. Highway H is a very open area and very dark. Wintertime it can be an iced over road. The road itself even though it's controlled by a certain speed limit sometimes people have a tendency to go and exceed that limit. I don't see any mention here about any type of street lighting or any type of warning. Semis coming and going could cause a serious, serious traffic problem accident-wise. Is there any plans that you know of to address this.

Adam Artz:

Absolutely. If you look at the site plan right now this is actually a different concept that was previously approved. If you look on the south side of the building this development is going to have one access point. It's actually moved off the blind top of the hill by the cemetery. Previously it was approved for those trucks to come up and actually go up about 23 feet vertically on a hillside and come out at the top. This is now the south end of the site. So if you're coming over the hill you'll actually have the better line of sight than previously.

There are lights being proposed at the entrance not in the right of way. They're private lights at this time. There are no public street lights out there. So the entrance is proposed to be lit per the Village standards at the time. This has been sent to the County for their review, and to this date we don't have our access permit, that's usually the last thing we get. The County wants all the technical details established. But we envision that it will be approved by the County as well.

Michael Serpe:

That's okay. But if you're only talking lights at the entryway, if trucks are going to be coming and going at all hours of the night I don't know how much -- I just would like to see some consideration for these solar powered warning lights. You don't have to hook them up to a telephone pole. It might be expensive, $1,500 or $2,000 to put in but they're done. You just let it run. And it gives some warning for the traffic on H that there's trucks entering and leaving the

site. I just fear that we might have some serious accidents in that road and in that area if we're not careful.

Adam Artz:

Well, I can say that tonight we're here for Preliminary Site and Operational, and I unfortunately can't make that decision. I'm just their technical agent on this one. But I'd be glad to take that back to Majestic and then incorporate that into the next meeting that comes before you for final operations.

Michael Serpe:

Jean's got something to say.

Jean Werbie-Harris:

I will definitely have a conversation with Gary Sipsma. We did talk about it briefly. He's been out of town for the last week and a half, so I will visit with him again. And we've talked about this as a staff as to whether or not there should be some public street lights in this vicinity because it is a very dark stretch. So we will have that discussion further. Again, we're at the preliminary stage because we're just doing mass grading, and they'd still need to submit their fully detailed site and operational. But as part of the development agreement I will have that conversation with the staff and with Gary Sipsma.

Michael Serpe:

Appreciate that, thank you.

Jim Bandura:

So there's no plans as of now for maybe widening H.

Mike Pollocoff:

No.

Adam Artz:

If you don't mind we are widening it at our intersection. There will be bypass lanes for the traffic that is intended to go around any stopped or queued vehicles in the development, and that's about 360 feet long.

Mike Pollocoff:

That's a little bit different than widening it, though. We'd require that anyway, but that intersection works pretty good. Right now you look at Kenosha County's -- County H is still a two lane road. It's been a two lane since the park started in 1989. And it should be widened out

to probably a more normal standard, and it should have a truck foundation to it, concrete and asphalt.

Jim Bandura:

And I just came down that road, and there was traffic backed up from Bain Station all the way down to Terwall Terrace and 95th. It was.

Jane Romanowski:

There was an accident tonight.

Jim Bandura:

There was?

Judy Juliana:

Yeah, a semi rolled over on 165.

Adam Artz:

I will say as part of the traffic impact analysis that was done under the guidance of Kenosha County the impacts of this development at full build out were analyzed, and that's why when Jean mentioned a financial contribution instead of having Majestic make the improvements themselves, a [inaudible] if you will at the intersection of Bain Station and H, they're contributing to a larger project that the County is getting funding for.

Wayne Koessl:

I have the same concerns as Mike about the traffic on that road. Because the times I go through there especially at the end of the day they start backing up to the south because it's a north exit out of LakeView Corporate Park. And with the increase in truck traffic and with the school to the south I think we should pursue it with the County, and I'm glad Jean is going to do that. Because anything we can do to enhance the quality of the warning and the lighting there to help the people would be beneficial. H is not really geared for a truck highway.

Bill Stoebig:

I'm assuming all the truck traffic is going to head south to 165. It can't go routed north out of that site?

Adam Artz:

The intention is yes. Although the traffic impact analysis, again, prepared under the guise of the County assumed some going north. It's something you can't just restrict. But, again, the improvements on Bain Station and H are assuming that some traffic is coming out of LakeView Corporate Park and this development going north. It's not a preferred truck route by any means.

Deb Skarda:

Just a quick question with regard to the land improvements and protection of the cemetery. Is there any special plans. It looks like the setback -- 45 feet is pretty standard, Jean?

Jean Werbie-Harris:

It is pretty standard. Why don't you tell --

Adam Artz:

So there's two things with the cemetery. One the tree preservation easement that Jean discussed that's actually the south like, if you will, the hedgerow on the south side of that those are all being preserved. There are some very nice trees there. So the setback has been increased there. But there's also a fence being installed along that property line to ensure that there's no interaction between the two. Realistically there probably won't be any interaction simply because if you go out to the site today and you look from south to the north the vantage point will show you that right at the north property line by the cemetery it goes way up in elevation. So you can imagine a 425,000 square foot plateau or ten acres of perfectly flat, it's going to be lower than that elevation just for the overall [inaudible].

Jean Werbie-Harris:

So there's actually going to be a retaining wall that's pretty significant between the two. And the possibly some type of decorative fence on top of that retaining wall that separates that northern area to the cemetery as well. And then there will be a flat green space that's still mowable in that area as well.

Adam Artz:

One more point on that. This site was the former site of the Badger Generating Station, they were going to build a power plant on it. As part of their due diligence on that site they did a very extensive archeological package on this. They actually had two dig sites on this site where they thought there could be some remains of the cemetery or even Indian burial grounds. The site was cleared for all archeological. It's contained within the cemetery limits. That was their finding of the report.

Deb Skarda:

Okay, thank you.

Tom Terwall:

If nothing further -- yes, Jean?

Jean Werbie-Harris:

Just to clarify. So, Adam, it looks like there's still going to be a connection to the north in the photograph that you had sent us. That is not accurate.

Adam Artz:

That is not accurate.

Jean Werbie-Harris:

Just so that everyone understands. Go back to the other slide, the previous slide. So the one that's circled in red that is accurate because you're just having one connection.

Adam Artz:

We'll actually have two but one is an emergency services access only. You can kind of picture on the south driveway access there's a bottom of the gray area there's actually going to be another road that projects down. There's an existing farm drive right there, there's an existing construction entrance. They're going to pave that for a secondary emergency access entrance into the development. We worked with the Chief on that. It will be gated.

Jean Werbie-Harris:

So there won't be a northerly entrance right south of the cemetery?

Adam Artz:

Correct.

Jean Werbie-Harris:

So that's a little confusing. They kind of gave us an old drawing on that one. So just so you know that that won't be at that location. So it will be a greater separation.

Adam Artz:

And with the assumption we get approved tonight you'll actually see drawings tomorrow reflecting all the --

Jean Werbie-Harris:

Correction.

Adam Artz:

-- evolution of the project since we started interacting with the Village.

Tom Terwall:

With that a motion to approve the Site and Operational Plan is in order.

Jim Bandura:

So moved.

Wayne Koessl:

Second.

Tom Terwall:

IT'S BEEN MOVED BY JIM BANDURA AND SECONDED BY WAYNE KOESSL TO APPROVE THE SITE AND OPERATIONAL PLAN AS PRESENTED SUBJECT TO THE CONDITIONS AND COMMENTS IN THE STAFF REPORT. ALL IN FAVOR SIGNIFY BY SAYING AYE.

Voices:

Aye.

Tom Terwall:

Opposed? So ordered. Jean, anything further you want to add?

Jean Werbie-Harris:

I just want to say one of the things to the staff report I'm adding some comments regarding the questioning for a need for public street lights or some type of warning system for traffic on Highway H. And I will discuss that with Kenosha County.

Tom Terwall:

With that we need to send a favorable recommendation to the Village Board for the development agreement.

Jim Bandura:

So moved.

Michael Serpe:

Second.

Tom Terwall:

MOVED BY JIM BANDURA AND SECONDED BY MICHAEL SERPE THEN TO SEND A FAVORABLE RECOMMENDATION TO THE VILLAGE BOARD TO APPROVE THE DEVELOPMENT AGREEMENT AND RELATED PLANS SUBJECT TO THE TERMS AND CONDITIONS OUTLINED IN THE STAFF MEMORANDUM. ALL IN FAVOR SIGNIFY BY SAYING AYE.

Voices:

Aye.

Tom Terwall:

Opposed? So ordered.

D. Consider the request of Mark Eberle, P.E. of Nielsen Madsen and Barber, agent for the owners of Westwood Estates Manufactured Home Park for approval to complete the private improvements for the previously approved expansion of the Manufactured Home Park located at 7801 88th Avenue.

Jean Werbie-Harris:

Mr. Chairman and members of the Plan Commission, this is a request of Mark Eberle, P.E. of Nielsen Madsen and Barber, agent for the Owners of Westwood Estates Manufactured Home Park for approval to complete the private improvements for the previously approved expansion of the Manufactured Home Park located at 7801 88th Avenue.

The Village had been working with the owners of the Westwood Estates for several years related to the phased construction of public and private improvements for the Westwood Estates Manufactured Home Park addition. The following is a brief history of the project and what items remain unfinished. And, again, just to remind everyone, Westwood Mobile Home Park is located on the east side of County Highway H. It's just south of Highway 50. It's just kind of north/northeast of the roundabout where H and C intersect. So north of 85th Street.

Nielsen Madsen and Barber originally worked with the owners and the Village on the approval of the engineering and platting documents for the 85 lot park expansion in 1997/1998 and the initial phase of construction which took place in 1999. That initial phase included mass grading of the site, construction of the two required storm water detention basins and the installation of the sanitary sewer metering manhole.

Since that time, four additional phases of construction have taken place at the site expanding the private roadways and utilities which has allowed 67 of the 85 lots to be considered buildable. The remaining 18 lots for which the private infrastructure needs to be completed to become buildable are Lots 285 through 291 and 316 through 329 as shown on the Westwood Estates Infrastructure Completion Exhibit. As noted on the exhibit, the following private improvements have yet to be constructed:

- Pavements and Water main on Pine Street, Oak Street to Evergreen Drive and Evergreen Drive Lot 284 to 85th Avenue.
- Storm Sewer on Evergreen Drive Lot 284 to 85th Avenue and the intersection of Evergreen Drive and Pine Street.
- Water Services and Risers for Lots 285 to 291 and 316 to 329.
- Public Utilities, gas, electric, phone and cable for a majority of the aforementioned 18 lots.

Since the original design documents are 15 plus years old and Nielsen Madsen and Barber no longer utilizes the software in which they were designed, modifications using phase lines had to be added to the drawings via Adobe. These modifications are shown in red on the 2016 Infrastructure Completion drawings. As far as the design is concerned, nothing has changed and Westwood Estates Owners are planning on completing the work per the original design documents.

In order to move forward with the construction, the following permits as listed below which have since expired need to be updated, resubmitted and reapproved by the various public agencies. In addition, a pre-construction meeting will need to be held at the Village offices after permits are obtained and prior to the start of the project. Permits required:

1. Wisconsin DSPS General Plumbing Permit for the private onsite water mains and storm sewers. A new WI DSPS will be issued upon submittal of application to the State.
2. Village of Pleasant Prairie Erosion Control Permit. A new permit will be issued upon submittal of application.
3. Village Work in the Right-of Way Permit for the minor work at the Evergreen Drive / 85th Avenue intersection. A new permit will be issued upon submittal of application.
4. Village Exterior Plumbing Permit for the private water and private storm sewer main. Inspections by the Village's Plumbing Inspector are required. A new Village exterior plumbing permit will be issued upon submittal of the application.

Since the mass grading is complete at the site and all roadways were originally constructed to sub-grade and then covered with topsoil, the limits of disturbance will be just below the one acre limit, eliminating the need for a Wisconsin DNR NOI permit.

In addition to completing the park build-out, it is the owner's intention if funding allows to do some minor asphalt base patching on the previously constructed private pavements in the expansion area and install the final lift of asphalt on all of the roadways giving the site a uniform finished appearance. This is not a matter for public hearing, and the staff recommends approval of the previously approved expansion subject to all the comments and conditions as outlined in the staff memorandum.

Tom Terwall:

What’s your pleasure?

Michael Serpe:

So moved.

Jim Bandura:

Second.

Tom Terwall:

IT'S BEEN MOVED BY MICHAEL SERPE AND SECONDED BY JIM BANDURA TO SEND A FAVORABLE RECOMMENDATION TO THE VILLAGE BOARD TO APPROVE THE IMPROVEMENTS SUBJECT TO THE TERMS AND CONDITIONS OUTLINED IN THE STAFF MEMORANDUM. ALL IN FAVOR SIGNIFY BY SAYING AYE.

Voices:

Aye.

Tom Terwall:

Opposed? So ordered.

8. ADJOURN.

Judy Juliana:

So moved.

Jim Bandura:

Second.

Tom Terwall:

All in favor signify by saying aye.

Voices:

Aye.

Tom Terwall:

Opposed? We stand adjourned. Thank you.

Meeting Adjourned: 7:17 p.m.

PLEASANT PRAIRIE PLAN COMMISSION MEETING
VILLAGE HALL AUDITORIUM
9915 39TH AVENUE
PLEASANT PRAIRIE, WISCONSIN
6:00 P.M.
May 9, 2016

A regular meeting for the Pleasant Prairie Plan Commission convened at 6:00 p.m. on May 9, 2016. Those in attendance were Thomas Terwall; Michael Serpe; Wayne Koessl; Deb Skarda; Jim Bandura; Judy Juliana; Bill Stoebig; John Skalbeck (Alternate #1); and Brock Williamson (Alternate #2). Also in attendance were Michael Pollocoff, Village Administrator; Tom Shircel, Assistant Administrator; Jean Werbie-Harris, Community Development Director; and Peggy Herrick, Assistant Zoning Administrator.

1. CALL TO ORDER.

2. ROLL CALL.

3. CORRESPONDENCE.

4. CITIZEN COMMENTS.

Tom Terwall:

If you're here for an item that appears on the agenda as a matter for public hearing, we would ask that you hold your comments until that public hearing is held. However, if you're here to discuss an item that's not a matter for public hearing now would be your opportunity to do so. We would ask you to step to the microphone and begin by giving us your name and address. Anybody wishing to speak under citizens' comments?

5. NEW BUSINESS.

Michael Serpe:

Tom, I would ask that Item D be moved to the front of the agenda.

Jim Bandura:

Second.

Tom Terwall:

MOVED BY MICHAEL SERPE AND SECONDED BY JIM BANDURA TO TAKE IT OUT OF ORDER. WE'LL TAKE ITEM D FIRST. ALL IN FAVOR SIGNIFY BY SAYING AYE.

Voices:

Aye.

Tom Terwall:

Opposed? So ordered.

D. **Consider the request of Michael Christiansen, owner of the property at 9301 River Road for approval of the Lot Line Adjustment with the adjacent property to the north located at 9109 River Road.**

Jean Werbie-Harris:

Mr. Chairman and members of the Plan Commission, Item D is to consider the request of Michael Christiansen, owner of the property at 9301 River Road, for the approval of the lot line adjustment with the adjacent property to the north located at 9109 River Road.

The owners of the properties located at 9301 River Road, Tax Parcel Number 92-4-122-181-0102, and 9109 River Road, Tax Parcel Number 92-4-122-181-0101, are proposing to adjust their lot lines. The north lot line of 9301 River Road is being adjusted to add approximately 3,264 square feet from the property at 9109 River Road. By adjusting the common lot line, it will allow for the owner of 9301 River Road to construct a detached garage.

Both properties are zoned A-3, Limited Agricultural District, and both have portions that are located within the FPO, Floodplain Overlay District. The parcel at 9109 River Road also has portions zoned C-1, Lowland Resource Conservancy District. The property at 9301 River Road is considered a non-conforming lot in that the lot does not meet the minimum requirements for the A-3 District with respect to the lot size and lot frontage. The A-3 District requires a minimum lot area of five acres with a minimum lot width on a public street of 300 feet. This lot line adjustment adds more area to that non-conforming lot making the lot less non-conforming. The lot line adjustment will comply with the requirements set forth in the Village Zoning Ordinance and Land Division and Development Control Ordinance.

So the purpose of this lot line adjustment will allow him to build that detached garage. The Village staff recommends approval of the lot line adjustment subject to the petitioners recording the proper transfer and deed documents with the plat of survey for the lot line adjustment as an exhibit at the Kenosha County Register of Deed's office within 30 days of the approval.

Tom Terwall:

What's your pleasure?

Jim Bandura:

I would move for approval.

Wayne Koessl:

Second.

Tom Terwall:

IT'S BEEN MOVED BY JIM BANDURA AND SECONDED BY WAYNE KOESSL TO SEND A FAVORABLE RECOMMENDATION TO THE VILLAGE BOARD TO APPROVE THE LOT LINE ADJUSTMENT SUBJECT TO THE TERMS AND CONDITIONS OUTLINED IN THE STAFF MEMORANDUM. ALL IN FAVOR SIGNIFY BY SAYING AYE.

Voices:

Aye.

Tom Terwall:

Opposed? So ordered.

A. PUBLIC HEARING AND CONSIDERATION OF A FLOODPLAIN BOUNDARY ADJUSTMENT for the request of Matt Fineour, P.E. Village Engineer on behalf of the Village of Pleasant Prairie, owner of the property located at 8600 Green Bay Road to remove 1,500 cubic yards from the 100-year floodplain and to create 1,615 cubic yards of 100-year floodplain to compensate for the 100-floodplain begin filled for the construction of a 65,664 square foot Public Works equipment storage building.

Wayne Koessl:

We're doing A and B together.

Tom Terwall:

Is there a motion?

Wayne Koessl:

I make a motion that we do Items A and B as one item and do separate votes on them.

Judy Juliana:

Second.

Tom Terwall:

MOTION BY WAYNE KOESSL AND A SECOND BY JUDY JULIANA TO DO ITEMS A & B AS ONE ITEM WITH SEPARATE VOTES. ALL IN FAVOR SIGNIFY BY SAYING AYE.

Voices:

Aye.

Tom Terwall:

Opposed? So ordered.

B. Consider the request of Matt Fineour, P.E. Village Engineer on behalf of the Village of Pleasant Prairie, owner of the property located at 8600 Green Bay Road for approval of Site and Operational Plans for the construction of a 65,664 square foot Public Works equipment storage building and associated site improvements.

Jean Werbie-Harris:

Mr. Chairman and members of the Plan Commission and the audience, the first item is a public hearing and consideration of a floodplain boundary adjustment, and this is at the request of Matt Fineour, who is our Village Engineer on behalf of the Village of Pleasant Prairie, owner of the property located at 8600 Green Bay Road to remove 1,500 cubic yards from the 100-year floodplain and to create 1,615 cubic yards of 100-year floodplain to compensate for the floodplain begin filled. And this is for the construction of a 65,664 square foot public works equipment storage building.

The second request is to consider the request of Matt Fineour, Village Engineer on behalf of the Village of Pleasant Prairie, owner of the property located at 8600 Green Bay Road. This is for the approval of Site and Operational Plans for the construction of a 65,664 square foot public works equipment storage building and associated site improvements.

As indicated, these items are separate, but we're going to discussing them at one time, but separate action is required.

Specifically then, the petitioner is requesting approval of a floodplain boundary adjustment, and the second item is Site and Operational Plan approval. And this is for a 65,664 square foot public works equipment storage building and associated site improvements at the Village's Roger Prange Municipal Center located at 8600 Green Bay Road.

Site and Operational Plan: The Village is proposing to construct a new 65,664 square foot, pre-cast, fully-sprinklered storage building for the Public Works Department equipment at the Roger Prange Municipal Center at 8600 Green Bay Road. The property is currently zoned I-1, Institutional District, C-1, Lowland Resource Conservancy District, and FPO, Floodplain overlay District. The new storage building will house equipment and vehicles that are currently being stored outside due to lack of space in the existing covered storage buildings. Such equipment includes snow plow trucks, plow blades, light duty vehicles and other seasonal and general public works equipment. In conjunction with the new storage building, the Public Works Department will be relocating the residential recycling/compost site operations from the Roger Prange Municipal Center site to the former 73-1 site located at 8000 128th Street in the Village.

The hours of operation at the proposed building will correspond with typical Public Works Department operations, which are from Monday through Friday 6:30 a.m. to 3:30 p.m. and as needed for Village snow plowing, garbage collection, sanitary sewer and water operations or other municipal services.

The new building and related site improvements, including grading, expanding the storm water retention facilities, amending the 100-year floodplain and installing the required fire lane for the new building that will result in the reduction of 12 parking spaces along the north side of the building, and this is to accommodate the 30 foot wide fire lane. The total number of outside surface parking spaces for employees and guests for the Prange Center buildings is 139 spaces, plus 3 handicapped accessible parking spaces.

The mass grading for the storage building project is projected to begin in May of 2016 with building construction to begin shortly thereafter. The project is proposed to be completed by late fall 2016.

The existing storm water pond and depression area west of the pond is not considered a wetland by the Wisconsin Department of Natural Resources. The U.S. Army Corps of Engineers has not yet made a determination yet as to whether they are taking jurisdiction of these wetland areas. If the Army Corps. of Engineers takes jurisdiction, then the Village will be required to submit for a Zoning Text and Map Amendment to rezone the field delineated wetlands into the C-1, Lowland Resource Conservancy District, and to create a PUD or a Planned Unit Development Overlay District to modify or reduce the building's 25 foot setback from the wetlands and the existing gravel area setback to the wetlands. In addition, an amendment to the Village's Comprehensive Land Use Plan will be required to correctly reflect the field delineated wetlands on the property.

Floodplain Boundary Adjustment: The Village is proposing to amend the Federal Emergency Management Agency or FEMA Federal Insurance Rate Maps or FIRM maps which have an effective date of June 19, 2012. The floodplain boundary amendment is associated with the 100-year floodplain of the Jerome Creek being impacted by the Public Works equipment storage building and associated site improvements as noted on the slide. The proposed project will remove 1,500 cubic yards from the 100-year floodplain and create 1,615 cubic yards of 100-year floodplain to compensate for the 100-floodplain being filled. Upon the project's completion, there will be a net increase of 115 cubic yards of floodplain storage volume over the existing condition floodplain storage.

The proposed floodplain boundary adjustment amendment is consistent with the purposes of Section 420-131 of the Village Zoning Ordinance, and it is not in conflict with the applicable rules of the Wisconsin DNR or the FEMA. Furthermore, this project is proposed to be in compliance with 420-131 of the Village Zoning Ordinance and will comply with the following Village Ordinance requirements:

- The floodplain boundary adjustment shall be consistent with Section 420-131 of the Village Zoning Ordinance and not in conflict with the applicable rules of the Wisconsin DNR and FEMA.

- Amendments to the floodplain boundaries shall not be permitted where the change will increase the regional flood stage elevation unless the applicant has made appropriate legal arrangements with the Village and any other affected governmental units and any other property owners that might be affected by the flood stage increase.

- Petitions for the floodplain amendment shall provide adjusted water surface profiles and adjusted floodplain limits to reflect the increased flood elevation.

- Any area removed from the floodplain shall be contiguous to land lying outside the floodplain.

- Whenever any volume of flood storage capacity is removed from the floodplain, as defined by the ground surface and the regional flood elevation, an equal volume of flood storage capacity shall be created within the existing or newly created floodplain boundary in the vicinity of the removal to compensate for the lost flood storage capacity. Excavation below the ordinary high water mark shall not be considered as providing any equal volume of storage capacity for compensation purposes. Any such area of compensating flood storage capacity shall drain freely to the receiving stream.

- Removal of land from the floodplain shall not be permitted unless the land has been filled to an elevation at least two feet above the elevation of the floodplain.

The Village received technical approval from the Wisconsin DNR on April 18, 2016 for the proposed floodplain adjustment. And the letter is attached in your information. Village staff is recommending that the requirement to obtain a Conditional Letter of Map Revision based on fill or known as the CLOMR-F be waived for this project to allow the petitioner to move forward at their own risk. However, a Letter of Map Revision based on fill or a LOMR-F after construction is completed will be required. Upon obtaining the LOMR-F, which is the LOMR based on fill, the Zoning Map and the Text Amendments and a Comprehensive Land Use Plan Amendment will also be required.

With that I'd like to continue the public hearing. We have representatives from both the Public Works Department and the Village Engineering Department, John Steinbrink, Jr., from the Public Works Department, and Matt Fineour from the Village Engineering Department to answer any questions that you may have with respect to the storage unit project or with respect to the floodplain boundary adjustment.

Tom Terwall:

John or Matt anything you want to add? This is a matter for public hearing. Is there anybody wishing to speak? Anybody wishing to speak? Anybody wishing to speak? Hearing none I'll open it up to comments -- yes, sir?

Steven Keller:

Steven Keller, 8809 Old Green Bay Road, basically across the street from the project. I hear all these words, the floodplains, and the water is not moving now in Jerome Creek and the creeks in that area. So there's not a free flow of water, but I've been hearing what she's reading that I don't see a lot of -- there's a lot of stoppage right by Green Bay Road. And I'd say the water is going to be moving to keep it going towards the floodplain. And I'm just saying with all that build up, parking and asphalt the water flow is not going to be flowing any quicker. It's not moving now. You go out there now every ditch over there is full of water. So that's my concern is that you're going to build up space for the water flow to go, but is it going to be moving to that? Can I get a comment?

Tom Terwall:

Sure. Matt or John?

Wayne Koessl:

Beavers.

John Steinbrink, Jr.:

John Steinbrink, Jr., 8600 Green Bay Road, Director of Public Works. I do agree with the gentleman that just spoke. There has been some restrictions within the creek. And a majority of those are on the Pleasant Prairie Power Plant site. So we have been working with representatives from Pleasant Prairie Power Plant to remove the beavers. But as beavers do they continually are rebuilding the dams. So we've been in contact with representatives. They've taken out about 18 beaver dams so far this year, but they continually rebuild back.

There's also a blockage underneath the UP rail which they removed all of the wood and debris that was in there. They actually had to hire a boring company because it was packed to tightly in there. So I will continue to work with the power plant to make sure that all the beavers and the beaver dams are removed and the beavers are trapped and relocated all the way from almost Prairie Springs Park all the way back to the Whittier Heights area. But I do agree with the gentleman that the water is not flowing, but that is because of the beaver dams. And I will work with the power plant to make sure that they're removed and maintained on a regular basis.

Tom Terwall:

Thanks, John. Anybody else? I'll open it to comments and questions.

Jim Bandura:

This is a couple questions for John, Jr. Is there going to be enough turning radiuses for some of the larger equipment hearing going in circulation around the building?

John Steinbrink, Jr.:

Yes, as part of the design process we did to turning radiuses with the axle lengths of all the vehicles that we have within public works. And they meet and exceed the DOT standards for turning radiuses.

Jim Bandura:

Okay. And I also see that you're going to have heat, you're going to have water and sewer, right?

John Steinbrink, Jr.:

Yes, that's correct. We're going to heat it to around maybe 48 degrees. It's not going to be warm by any means, but the fire protection code has a minimum temperature that we need to keep it above. And I believe it's 45 degrees, so we'll be setting the thermostat around 48 degrees.

Jim Bandura:

Are you going to be repairing any vehicles in there?

John Steinbrink, Jr.:

No, we do not plan on moving our shop over to the storage facility. It will just truly be for storage of public works vehicles and equipment.

Jim Bandura:

Any thought of at least adding a washroom in there?

John Steinbrink, Jr.:

No. We actually evaluated that. And for the cost of what a restroom would cost it really does not pay for it. It's not the intention to have staff in there on a regular basis. It's just the intention truly just for storage for public works vehicles.

Tom Terwall:

Anybody else? If not, I'll entertain a motion.

Michael Serpe:

Move approval of the floodplain boundary adjustment.

Jim Bandura:

Second.

Tom Terwall:

IT'S BEEN MOVED BY MICHAEL SERPE AND SECONDED BY JIM BANDURA TO SEND A FAVORABLE RECOMMENDATION TO THE VILLAGE BOARD TO APPROVE THE FLOODPLAIN BOUNDARY ADJUSTMENT SUBJECT TO THE TERMS AND CONDITIONS OUTLINED IN THE STAFF MEMORANDUM. ALL IN FAVOR SIGNIFY BY SAYING AYE.

Voices:

Aye.

Tom Terwall:

Opposed? So ordered.

Jim Bandura:

Mr. Chairman, I would recommend the site and operational plan.

Wayne Koessl:

Second subject to the comments made by staff today.

Jim Bandura:

Correct.

Tom Terwall:

MOTION BY WAYNE KOESSL AND A SECOND BY JIM BANDURA THEN TO APPROVE THE SITE AND OPERATIONAL PLAN SUBJECT TO THE TERMS AND CONDITIONS OUTLINED IN THE STAFF MEMORANDUM. ALL IN FAVOR SIGNIFY BY SAYING AYE.

Voices:

Aye.

Tom Terwall:

Opposed? So ordered. John, you can start building.

C. PUBLIC HEARING AND CONSIDERATION OF A CONDITIONAL USE PERMIT (INCLUDING SITE AND OPERATIONAL PLANS) for the request of John Steinbrink, Jr. Public Works Director, agent for Village of Pleasant Prairie owner of the property located at 8000 128th Street, for the proposed Residential Recycling Center. This facility is the Village's new residential compost site that is being relocated from the Roger Prange Municipal Center Building site.

Jean Werbie-Harris:

Mr. Chairman and members of the Plan Commission and the audience, Item C is a public hearing in consideration of a Conditional Use Permit including the Site and Operational Plans. And this is for the request of John Steinbrink, Jr., Public Works Director, agent for Village of Pleasant Prairie owner of the property located at 8000 128th Street, for the proposed Residential Recycling Center. This facility is the Village's new residential compost site that is being relocated from the Roger Prange Municipal Center Building site.

Since this is a conditional use, I'll be reading the public hearing comments, and as part of the public hearing record the Village staff has compiled a listing of findings, exhibits and conclusions regarding the petitioner's request and are going to be presented and read into the record.

Findings of Fact

1. The petitioner is requesting approval of a Conditional Use Permit including Site and Operational Plans to operate the Village of Pleasant Prairie Residential Recycling Center

at 8000 128th Street. This facility is the Village's new residential compost site that is being relocated from the Roger Prange Municipal Center Building site. The property is referred to as the former 73-1 sewerage treatment facility site. Exhibit 1 has a copy of the application and the plans.

2. The subject property is located in a part of the U.S. Public Land Survey Section 33, Township 1 North, Range 22 East, lying and being in the Village of Pleasant Prairie, Kenosha County, Wisconsin and further identified as Tax Parcel Number 92-4-122-333-0800.

3. As part of the 2016 Village budget funds were allocated for the construction of an additional storage building at the Roger Prange Municipal Center. The storage building is intended to provide indoor storage space for equipment used by the Public Works Department in order to better protect and prolong the life of the equipment. Because the new storage building is being constructed at the current compost site location, the Village is working to relocate the compost site to 8000 128th Street.

4. Currently the Village processes leaves, grass and branches into compost at the Prange site. The material is then hauled monthly to the 8000 128th Street processing site. The proposed plan is to have the residents drop off the material directly at the 8000 128th Street site. This will eliminate the need to haul the material in and out with large trucks. The new site will also accept other recyclable materials such as electronics, residential hazardous materials, oil, antifreeze, batteries, residential garbage and recycling, broken concrete and asphalt, tires, leaves, grass, branches, wood chips and compost.

5. Relocating the compost operations to the Residential Recycling Center will offer a cost savings that will partially offset a decrease in grant funding received from the State for recycling and hazardous waste elimination programs. In addition, relocating the compost operations will eliminate transportation costs for moving compost material from the old site to the new site and will then improve its efficiency for staff and residents. The move will also enable the Village to establish a waste transfer site in the future to consolidate transportation costs by hauling larger loads of non-recyclable materials to the landfill less often.

6. The existing 2,100 square foot electronics recycling building on the 8000 128th Street site will remain, and a new 49 square foot check-in building will be constructed. The existing hazardous materials storage building will be relocated from the Prange site to the new site. Hazardous materials include anything that is marked: Caution, combustible, corrosive, danger, flammable, pesticide, poison, reactive, toxic or warning.

7. The existing residential compost site at 8600 Green Bay Road is expected to close at the end of business on Saturday, June 4th, and the new Residential Recycling Center is expected to open at 9:00 a.m. Monday, June 6th.

8. The facility is going to be open to the public including deliveries or shipments Monday through Friday from 9:00 a.m. to 7:00 p.m. and Saturday 7:00 a.m. to 4:00 p.m. During the Monday through Friday time period one part-time employee will be on-site, and on Saturdays one full-time and one part-time employee will be on-site.

9. Access to the site will be from 128th Street or the State Line from the south, and a parking lot area will allow for up to 15 off-loading spaces and 9 loading spaces for residential trailers. The average daily number of trips is expected to be up to 100 per weekday with an anticipated maximum of 250 on Saturdays.

10. The property where the proposed facility is to be located is zoned I-1, Institutional District. Other non-impacted or non-developable portions of the site are zoned C-1, Lowland Resource Conservancy District, and FPO, Floodplain Overlay District. No work is proposed with the wetlands or 100-year floodplain on the property.

11. The 2035 Land Use Plan Map 9.9 of the Village Comprehensive Plan indicates that this property is located within the Governmental and Institutional land use designation, and the non-impacted environmental areas are located within the Primary Environmental Corridor, Other Open Space with wetlands and 100-year floodplain land use designations.

    A refinement of the Land Use Plan is a Neighborhood Plan. Neighborhood Plans take into account the compatibility of existing and planned land uses, identifies how future land divisions and developments could occur, plans how access roadways to the land divisions should be provided and interconnected to existing roadways, examines the practicability of providing certain lot layouts, road layouts, parkways, open space areas, park areas, preservation areas, public community facilities, infrastructure improvements and municipal services to service the area. This property is located within the Green Hill Farms Neighborhood Plan area.

    As recommended as part of the Implementation Element of Chapter 10 of the Village Comprehensive Plan, Neighborhood Plans shall be revised and updated to ensure that these plans are consistent with the Comprehensive Plan. If there is a conflict between a specific Neighborhood Plan and the Comprehensive Land Use Plan Map 9.9, then the Comprehensive Plan Land Use Plan shall govern and the Neighborhood Plan should be amended.

    With that being said, the proposed Residential Recycling Center is allowed with a Conditional Use Permit in the I-1, District, which is consistent with the Comprehensive Land Use Plan; however the Green Hill Farm Neighborhood Plan needs to be amended. The Plan Commission action this evening is subject to the approval of that Neighborhood Plan Amendment which is going to be considered at the May 23, 2016 Plan Commission meeting. Exhibit 2 is a copy of the notice of that public hearing.

12. Notices were sent to adjacent property owners via regular mail on April 21, 2016, and notices were published in the *Kenosha News* on April 25, 2016 and May 2, 2016.

13. The petitioner was e-mailed a copy of this memo on May 6, 2016.

14. According to the Village Zoning Ordinance, the Plan Commission shall only approve a Conditional Use Permit if they find after viewing the findings of fact, the application and related materials and any information presented at the hearing that the project as planned, will not violate the intent or the purpose of all the Village Ordinances and it meets the minimum standards for the granting of a Conditional Use Permit. Furthermore, the Plan

Commission shall approve any site and operational plan application if they find in their decision that the application, coupled with satisfaction of any conditions of approval, will comply with all applicable Village ordinance requirements and all other applicable federal, state or local requirements relating to land use, buildings, development control, land division, environmental protection, sewer service, water service, noise, storm water management, streets and highways and fire protection.

With that I'd like to continue the public hearing. And, again, I'd like to introduce John Steinbrink, Jr., who is our Director of Public Works to answer any questions that you may have with respect to the residential recycling center.

Tom Terwall:

Before I open it up, John, anything you want to add?

John Steinbrink, Jr.:

No.

Tom Terwall:

This is a matter for public hearing. Is there anybody wishing to speak. Yes, sir. Come to the microphone please.

Steve Franklin:

Good evening.

Tom Terwall:

Need your name and address, sir.

Steve Franklin:

Sure. Steve Franklin, 8400 122nd Street. I generally have no issue with the compost. It's the hazardous waste that I'm concerned about. Well water is what we get from there, and I'm wondering about the abatements and what we'd do in case of a spill. That's the biggest concern I have. As you mentioned one of the things is water use. So a four year old home. I'm concerned about that.

Tom Terwall:

Thank you. You want to answer right away, John?

John Steinbrink, Jr.:

Sure. John Steinbrink, Jr., 8600 Green Bay Road, Director of Public Works. Like the gentleman said we are going to have hazardous waste collection. It is a residential households hazardous waste. The Village did purchase back I believe it was three years ago an actual DNR EPA

certified hazardous waste storage unit that has containment and ventilation. And it's all set amongst an impervious area. And so on the days of collection everything goes from the impervious area on a tarp or under a tent right into that storage facility. And so that the possibility of anything leaking or spilling out is next to nothing with that.

Tom Terwall:

Then how do you transfer out of there then, John?

John Steinbrink, Jr.:

Once we go and we bulk it into the drum which is done inside the containment facility, we hire a hazardous waste company that comes and takes the sealed barrels out and brings them to the certified landfill. And so the process as it goes from the resident's car, they park over top of an impervious tarp that's on top of the asphalt, it's bulked into a container, then the container is stored within the hazardous storage unit. It's actually a special made container. It's actually sitting right now next to the salt shed just to the south on the west end of the Prange Center. And so then that will have its own self-containment and defined space and air and ventilation. And so we do everything that's out there to make sure that the spill hazardous is eliminated.

Tom Terwall:

Thanks.

Bill Stoebig:

How often does it get transported?

John Steinbrink, Jr.:

It probably happens about every three months. We don't get such a large volume of hazardous waste. Keep in mind the hazardous waste that we're getting is fluorescent light bulbs, paint thinner, stuff like that, anything that's household hazardous.

Deb Skarda:

Is it prescheduled, or do you wait until you get to a certain threshold and then schedule it?

John Steinbrink, Jr.:

Well, the collections are the first Saturday of the month. And then once we reach a certain threshold then we call for collection. It happens to be historically about every three months we do the collection.

Tom Terwall:

Any other questions? Thanks, John. Yes, sir.

[Inaudible]

Jean Werbie-Harris:

We need to have you come up to the microphone, I'm sorry.

Steve Franklin:

I'm curious about the history of the results of the groundwater surrounding that.

John Steinbrink, Jr.:

We've not done any testing. I'm not sure if you're talking about at the Prange Center or at the new residential recycling center. But we have not tested the water in either of the sites.

Tom Terwall:

Thank you.

Steve Franklin:

So you said it was impossible to leak but you don't know?

John Steinbrink, Jr.:

I would not say that anything is impossible, but we do take every precaution to minimize any spill that may happen.

Tom Terwall:

Mike, do you have something to add?

Mike Pollocoff:

Yeah, I would just say that public works follows the standard accepted best practices for handling the hazardous waste. This isn't corporate waste as John indicated. It's residential waste. We've successfully operated this at Roger Prange for three years with no spills, no contamination outside the site. The Village's interest in having any of this get offsite is not in our interest at all. And if we were going to do a water sample of the site, right now I don't even believe there's a well out there to check.

But the site is reasonably close to the landfills over across the State line as well as landfills to the north, the abandoned City of Kenosha landfill and the abandoned Town of Pleasant Prairie landfill. So currently there's more than enough sites where there could be some anticipated problems. And the testing that has occurred because of those landfills hasn't revealed any contamination in that area. And the landfills that have been abandoned by the City of Kenosha

and the Town of Pleasant Prairie were in place and abandoned long before there were any significant standards to control how those landfills were operated. So in the absence of any contamination from those sites if there was something going on in the area we would see that.

One of the things that we could offer to the residents that are in that area is to provide us with a water sample since the residents in the Green Hill Farms Subdivisions are currently on wells, is to provide us a water sample, and we could do that prior to starting and then at the end of a year and take a look and see if there's any appreciable change in the content of the water to see if anything happens.

Steve Franklin:

I appreciate the offer. However, I know what my water is right now. The issue is not what the standard is right now, it's after the hazardous waste being collected for a period of time at that site. Is it six days a week right now or once a month?

Mike Pollocoff:

It's not every day of the year, but it's probably seven months a year.

John Steinbrink, Jr.:

Currently we have a collection the first Saturday of every month from April through December. And so it's one day that it's available for collection. If the gentleman would like I'd be willing to kind of show him our practice that we have and how it's collected at the site and the precautions that we take.

Mike Pollocoff:

I think one thing you misunderstood what I said --

Steve Franklin:

And I absolutely think that the training will be fine for seven days a years, but now you're talking about expanding it Monday through Saturday and you're having --

Mike Pollocoff:

No, that's just the regular compost.

Steve Franklin:

Regular compost. So the hazardous waste will still be seven days a year?

Mike Pollocoff:

Right. And as I indicated, I think you might have misunderstood me. I mean if you have a sample that's fine, and the Village is offering to do another sample after a year to see if there's any change in your water supply. So if you know what it is today and you feel it's adequate, the Village will do a sample at the end of the year to see if there's any change or if there's any elements that are coming off the site that we would classify as -- that we're collecting as hazardous waste. We know what we collect and we know what gets shipped, so we would know what those materials are. And based on the process that we use I'm confident that won't happen. But that being said it's easy for me to say we're confident, but I'm willing to say we'll test it at the end of the year and see if there's any trace elements that show up in your water supply.

Steve Franklin:

And what if there?

Mike Pollocoff:

Then we'd have to go from there and determine what the --

Steve Franklin:

I'm better. When it was presented I thought it was seven days a week or six days a week. But it's seven days a year. I guess I don't understand what the method is for the Village doing it versus the County doing it.

Mike Pollocoff:

No, the big reason that we're doing it instead is because it was difficult for Village residents to have one day a year that they could get everything out there. And my experience is, and I think John would echo this, not all residents but there are some if they miss that day at the County then whatever they had for hazardous waste is going in the garbage.

[Inaudible]

Mike Pollocoff:

I know and neither do we, but that's what happens. If people can't get rid of it they'll find a way to get rid of it. And by making it easier where we have seven days versus one day a year for that to be collected it really increases that getting in there, and it decreases or is less opportunity that it's just going to just show up in the regular solid waste.

Steve Franklin:

And I would lessen my objection now that I find it's a handful of days a year versus the volume of it, imagine me thinking it's six days a week for seven months.

Mike Pollocoff:

Right. I think if we had it open that much I don't think we'd receive that much more. And we'd have somebody there that deals with that specialty every day. We generate in this community a

lot of residential household waste, but it doesn't warrant being open any more than one day a month for seven months. Okay.

Deb Skarda:

Question. What's the plan for communicating the change as far as signage and newsletters so that people know to start dropping it off at the new location?

Mike Pollocoff:

We've been doing it through the newsletter. And plus everybody that does come to the compost site that we have now have been given a flier reminding them that as of June 6th that we have a new place. We'll have signage at the old site. I think the fliers we've been giving out have a map of how to get to the new site as well.

Deb Skarda:

Okay, thank you.

Bill Stoebig:

Currently are you taking -- hazardous waste, would that include like medications, old medications that have expired and stuff like that?

John Steinbrink, Jr.:

Medications are not included in hazardous waste. There is a drop site at the Pleasant Prairie Police Department in the front lobby. And so the PD sponsors medical waste that's open 24/7 for residents if they choose to drop it off there.

Bill Stoebig:

Does that go then get process through that facility?

John Steinbrink, Jr.:

No, it's actually a separate grant altogether that's administered by our police department.

Bill Stoebig:

Okay.

Tom Terwall:

Anything further?

Wayne Koessl:

Mr. Chairman, if there aren't any further comments --

Tom Terwall:

Yes? I'm sorry.

[Inaudible]

Jean Werbie-Harris:

You need to come up.

Mike Pollocoff:

You need to come up and give us your name and address.

Paul Schulz:

My name is Paul Schulz. My address is 12345 85th Avenue. The house is right across. You can see it right there, the second lot right on that fence line. This one right here. [Inaudible]. My main concern is the noise. I understand about the waste and stuff and the seven days out of the year, but the biggest thing is the noise. Right now as a school teacher one of the things I notice is when I'm home -- actually there's two things. The smell of the compost which I always have to call and tell them they have to shuffle it or whatever they have to do to keep it from stinking. And the other thing is the noise, the backup noise from the truck or the dump truck with the shaking of the beds. It shakes the whole house.

So I called earlier in regards to that when they were transporting stuff over to the other site that in order to get all this stuff out of the beds the vibration of the trucks it just whoosh. My house is right there and it just rattles it. It shakes and things like that. The biggest thing is the noise. The backup is a safety thing but all day long, beep, beep, beep, beep, beep, beep, beep, beep, beep all day long. And they start early like seven o'clock or whenever they start their shift or whatever. And that's my main concern. And I know Bruce my neighbor he also mentioned that. And he had some idea. I don't know if you want to share some ideas that you had in regards to maybe cut back on the noise or something.

Bruce Lorenzen:

I'm Bruce Lorenzen, I live in the lot –

Tom Terwall:

Give us your address, sir, for the record.

Bruce Lorenzen:

Yeah, 12335 85th Avenue. So just over the berm and just north of Paul's there, and that's my lot. So the concern is on Saturdays when we are home that how early would the backup alarms start

there, how late would they run. Saturday afternoon you can imagine if this was 200 feet from your back deck, and that's where it is for me. And the alarms with the construction there we've seen a lot during the day so we know how loud they are. And we know how loud they are when you turn the compost, say, during the week one day turning compost. That's not so bad.

But now on Saturday that's my concern. Can we control when we do the wheel loader work to push and move so it's not too early? And then knock it off even if we're collecting until four o'clock or something, knock it off earlier. Because I know the wheel loader doesn't have to run all the time from being over there and using the other site. But if we can kind of compact that to where it's not all day or it's not like it runs constantly. But just do it a few times to get it out of the way. And I know there's always going to be a backup alarm on the wheel loader. But cars will be coming and going. They don't have backup alarms, but the wheel loader that's a concern.

Tom Terwall:

John, you're on.

John Steinbrink, Jr.:

Yes, sir. I'll start out with addressing the wheel loader. We do provide a service for the residents which is only on Saturday where we offer loading of compost and mulch. And so there should be no loader operation Monday through Friday within the site. Right now the noise is probably exponentially greater because of the grading and excavation and all the prep work that's been going on for a couple years. We brought in some of the -- the base of the site has been recycled road millings from Meadowdale farms that we hauled in there and graded. And we're trying to do everything to really keep the costs down and under control.

But we are looking at only having the loader operationally on the site just for loading of the residents that come that want wood mulch or compost. And that's just on Saturday. I can't really tell how many people come throughout the day. We are open from 9 a.m. until 4 p.m. on Saturday. There will be some loading probably going on at 3:50 p.m. But we will do our best effort to when there's no one waiting to be loaded not to have the loader operational.

And the other points were with some of the noise I think we addressed from Paul's concern the smell. The biggest smell probably complaint that we have is on the days that we haul it to the site. And so the first Wednesday of every month the process is we take the browns and the greens or the grass and the branches, grind them and mix them together, but then it sits statically in a pile without the introduction of oxygen at the Prange Center until we can haul it out to the new facility. And sometimes that starts Thursday, Friday. Sometimes it's not until Monday. And so by having the site over there we'll be able to put it the first Wednesday of the month right from the grinder right into the compost pile, introduce wood chips which introduces oxygen which really keeps the smell down. So hopefully we can manage it a little bit better. If someone has something going on or they notice that the smell is bad I will offer my business card, and we'll do whatever practice that we can to reduce the amount of smell that we have on the site for processing.

Tom Terwall:

Yes, sir?

Paul Schulz:

What about the dump trucks? You're saying that they're [inaudible], and a lot of times the dump trucks, knowing that I've been a dump truck driver and all that stuff sticks to the bed, and in order to get it off you've got to vibrate it to get that stuff out of there. And I mean it's like when they vibrate it it shakes my house.

Mike Pollocoff:

We're not getting your comments into the record. That's one of the primary purposes of the public hearing.

Paul Schulz:

One of the concerns is the dump truck in regards to the shaking of the beds. Because it's so close and it's so frequent and they're going to be doing a lot of hauling, a lot more hauling of the material in that site, I called several times before for them to stop shaking because it vibrates my house. The windows shake, all the things on the window are going shake, shake, shake like that. So that's a concern especially when I'm home. When I'm at work it doesn't work, during the school year it doesn't matter. But when I'm off during the summer you can't even go outside either, one, because of the mosquitos, but the other one is the noise and the stink when it happens. You have people over and you want to have a barbeque or something and it smells awful. If anybody has the chance to smell compost when it's not regulated or taken care of it stinks. It's like sitting in a manure patch.

Michael Serpe:

By use eliminating the trunks going back and forth from the Prange Center to the new site wouldn't that eliminate some of the dump trucks that are working there now?

Paul Schulz:

I don't know [inaudible].

John Steinbrink, Jr.:

Our current practice as I mentioned is the first Wednesday of the month we grind at 8600 Green Bay Road and then we haul it Thursday, Friday and then the following Monday. By actually having the material at the residential recycling center there's no need to truck it at all. And so we have a seven yard bucket, a seven cubic yard bucket on our front end loader that will take it from the grinding and put it right into the pile hence eliminating the truck traffic for hauling 100 percent.

Michael Serpe:

John, while you're there, is there any possibility in the future that we could put some type of berm or something between the residents and the site?

John Steinbrink, Jr.:

Back in 1974 when the 73-1 treatment plant was built there was about a ten foot berm put in with pine trees. Those pine trees have now matured probably to around 40 feet. We have extended that berm around the west edge of the property, and kind of south where [inaudible] is there's a horse farm and a couple other properties, and we've extended that berm. And we do plan on planting some more spruce or pine trees within there. But there is a pretty thick stand of trees in there right now. And I believe that some of the pictures were included in your packet also.

Tom Terwall:

Anything further?

Steve Franklin:

Pine trees would be nice at the back there. I mean I have some on top. But to fill it out a little bit more but to fill it out a little bit more because I can see through, I can see the lights, I can see the building lights and stuff like that from my house. And I see all the barrels out there. It looks sort of dumpy actually because I can see right through it. Some of my trees ended up dying on that berm.

Michael Serpe:

We'll try and make that work.

John Steinbrink, Jr.:

I can schedule some time to meet with him onsite and go over the specific area that he's talking about. We'll attempt to address his needs as best we can.

Tom Terwall:

Thank you. Is there anybody else? Yes, ma'am.

Lisa Snider:

Hi. Lisa Snider. My address is 4631 122nd Street. But I own the property just east of all this, 25 acres there at 7800 128th Street. I had always planned on building a home there and still may, still working towards it. As you enter from Russell Road and you enter to go back all those trees were cut down because of the power line. And then also you guys are putting the road through there. Is it an actual road or is it a driveway? Is it going to be a road name?

Mike Pollocoff:

It's going to be a road with a name. We have no name right now.

Lisa Snider:

It's going to be a road?

Mike Pollocoff:

It's a municipal street.

Lisa Snider:

So this road will be there. I was wondering if there was a possibility to be able to -- I don't think you can put a berm there because there's a lot of wetlands and everything. I just don't think you'd be able to do that on the east side of that entrance. But if you could plant some tall evergreens, one, for the traffic that will be coming through there, 100 cars a day or 250 on Saturday or whatever was possible you were saying, but also for the lights. I mean at nighttime here when these lights are on I can see them at my house at 4600 over to 47th Avenue. So those lights you guys are going to be building over time. If these trees are planted now maybe that will help the lights not just be so bright.

Jean Werbie-Harris:

Where would this be right now?

Lisa Snider:

Okay, see that little entrance, that little curve that takes you in there? If you put some trees to the right of that road along the lake there. And then pretty much it gets real thick later on.

Jean Werbie-Harris:

Part of that is on Spiller's property, and the other part is in the Lake County right of way. So I don't know unless John would like to meet with them.

John Steinbrink, Jr.:

One of the issues that we may have we have done some environmental studies in there. And that entire area is a floodplain or a wetland. And I don't believe that with the ATC easements that's in there and then the distance from the ATC easement to the road that we would have any room to put any trees. One of the things that I have talked with the Village electrician about is when we do have the street lights in there's different throws of street lights, or kind of meaning the way that it throws light from the pole. And we are very sensitive to make sure that all the light is thrown -- the poles are going to be on the east side of the drive throwing light to the west. And we can even do a photometric study or have the Village electrician put one together to just verify that the type of light that we use only throws light to the west and not to the east. I'd be willing to go over the photometrics study with her once we have it completed, and it may take a week or so to have that done.

Tom Terwall:

Thank you.

Lisa Sinder:

And I would also [inaudible] if you didn't have enough room there to plant those trees you could plant them on our property just to have them get taller and start growing so that when we do build it will be blocked. We do have land that you could do that, and then maybe even the Spillers would want that on theirs, too. It might be a problem, but I'm just trying to think forward that if we plant trees this tall now then in a few years [inaudible].

Michael Serpe:

We totally understand. It's just that when we start putting trees on private property then we --

Lisa Snider:

I understand that, but there's only so much space to plant them.

[Inaudible]

Tom Terwall:

Is there anybody else? Hearing none, I'll open it up to comments and questions from Commissioners and staff.

Wayne Koessl:

Mr. Chairman, if the Commission doesn't have any more questions or comments I've been assured by the comments made by the Village Administrator and Director of Public Works that this is going to be handled property and I have no doubt about that. So I'd make the motion that we approve the Conditional Use Permit including the Site and Operational Plan subject to the comments and conditions of the Village staff report of November 9, 2015.

Tom Terwall:

Is there a second?

Jim Bandura:

Second.

Tom Terwall:

IT'S BEEN MOVED BY WAYNE KOESSL AND SECONDED BY JIM BANDURA TO APPROVE THE CONDITIONAL USE PERMIT INCLUDING SITE AND OPERATIONAL PLANS. ALL IN FAVOR SIGNIFY BY SAYING AYE.

Voices:

Aye.

Tom Terwall:

Opposed? So ordered.

Mike Pollocoff:

Before we adjourn, Mr. Chairman, before you adjourn, and I'm sorry I didn't get this in during roll call. Tonight we have with us our most recent appointee from the Village Board to the Plan Commission John Skalbeck. He's sitting here at the end of the table. He's another alternate to the Commission. John, if you could just give the Commission your speedy resume so they know who you are and where you're from.

John Skalbeck:

I'm trying to think I owe you guys a [inaudible]. I live at 11212 86th Street in Pleasant Prairie in River Oaks. I've lived there since 2001. I'm a Professor of Geology at the University of Wisconsin-Parkside.

Tom Terwall:

Welcome aboard. With that a motion to adjourn would be in order.

6. ADJOURN.

Michael Serpe:

So moved, yes.

Tom Terwall:

Is there a second?

Bill Stoebig:

Second.

Tom Terwall:

All in favor signify by saying aye.

Voices:

Aye.

Tom Terwall:

Opposed? We stand adjourned.

Meeting Adjourned: 6:55 p.m.

The petitioner has submitted the ***attached*** letter dated May 18, 2016 to withdrawn the following applications. They intend to continue to evaluate the merits and economics of the single family subdivision at this location.

Old Business.

A. **TABLED PUBLIC HEARING AND CONSIDERATION OF A PRELIMINARY PLAT** for the request of SR Mills on behalf of Creekside PP, LLC, the owner of the vacant properties north of the Creekside Crossing development generally located north of 93rd Street and east of Old Green Bay Road for the development of 65 single family lots and 7 Outlots on the remainder of the original Creekside Crossing development to be known as Creekside Terrace.

B. **TABLED PUBLIC HEARING AND CONSIDERATION OF PLAN COMMISSION RESOLUTION #16-04** for the request of SR Mills on behalf of Creekside PP, LLC, the owner of the vacant properties north of the Creekside Crossing development generally located north of 93rd Street and east of Old Green Bay Road to correct and amend the Village of Pleasant Prairie, 2035 Comprehensive Land Use Plan Map 9.9 and to update Appendix 10-3 of the Village of Pleasant Prairie Wisconsin, 2035 Comprehensive Plan to include said amendments for the proposed Creekside Terrace development. The amendments include: 1) to show the dedicated right-of-way within the "Existing Rights-Of-Way" designation; 2) to show the 7 Outlots as shown on the Preliminary Plat within the Park, Recreation and Other Open Space Lands land use designation and to designate Outlot 5 with an "N" for a Neighborhood Park; 3) to show the wetlands as shown on the Preliminary Plat within the Park, Recreation and Other Open Space Lands with a Field Verified Wetlands land use designation; 4) to show the 65 single family lots as shown on the Preliminary Plat within the Low-Medium Density Residential land use designation; and 5) to remove the Urban Reserve designation on the properties. [Note: The existing retention basins will remain in the Surface Water designation and the location of the 100-year floodplain designation will remain unchanged at this time.]

C. **TABLED PUBLIC HEARING AND CONSIDERATION OF A ZONING MAP AMENDMENT** for the request of SR Mills on behalf of Creekside PP, LLC, the owner of the vacant properties north of the Creekside Crossing development generally located north of 93rd Street and east of Old Green Bay Road to rezone the proposed 65 single family lots into the R 4.5 Urban Single Family Residential District, to rezone the 7 Outlots (excluding the wetlands) into the PR-1, Neighborhood Park and Recreational District and to rezone the field delineated wetlands into the C-1, Lowland Resource Conservancy District for the proposed Creekside Terrace development. The location of the 100-year floodplain (FPO, Floodplain Overlay District) will remain unchanged at this time.

BEAR
DEVELOPMENT
4011 80th Street, Kenosha, WI 53142
Phone: (262) 842-0556 Fax: (262) 842-0557

May 18, 2016

Jean M. Werbie-Harris
Community Development Director
Village of Pleasant Prairie
9915 39th Avenue
Pleasant Prairie, WI 53158

Dear Ms. Werbie-Harris:

Bear Development and Creekside PP, LLC have submitted Village applications for various approvals related to the Creekside Terrace project in the Village of Pleasant Prairie. Per your request and after extensive consideration, we are hereby withdrawing the following requests from Plan Commission consideration:

CONSIDERATION OF A PRELIMINARY PLAT for the request of SR Mills on behalf of Creekside PP, LLC, the owner of the vacant properties north of the Creekside Crossing development generally located north of 93rd Street and east of Old Green Bay Road for the development of 65 single family lots and 7 Outlots on the remainder of the original Creekside Crossing development to be known as Creekside Terrace.

CONSIDERATION OF PLAN COMMISSION RESOLUTION #16-04 for the request of SR Mills on behalf of Creekside PP, LLC, the owner of the vacant properties north of the Creekside Crossing development generally located north of 93rd Street and east of Old Green Bay Road to correct and amend the Village of Pleasant Prairie, 2035 Comprehensive Land Use Plan Map 9.9 and to update Appendix 10-3 of the Village of Pleasant Prairie Wisconsin, 2035 Comprehensive Plan to include said amendments for the proposed Creekside Terrace development. The amendments include: 1) to show the dedicated right-of-way within the "Existing Rights-Of-Way" designation; 2) to show the 7 Outlots as shown on the Preliminary Plat within the Park, Recreation and Other Open Space Lands land use designation and to designate Outlot 5 with an "N" for a Neighborhood Park; 3) to show the wetlands as shown on the Preliminary Plat within the Park, Recreation and Other Open Space Lands with a Field Verified Wetlands land use designation; 4) to show the 65 single family lots as shown on the Preliminary Plat within the Low-Medium Density Residential land use designation; and 5) to remove the Urban Reserve designation on the properties. [Note: The existing retention basins will remain in the Surface Water designation and the location of the 100-year floodplain designation will remain unchanged at this time.]

CONSIDERATION OF A ZONING MAP AMENDMENT for the request of SR Mills on behalf of Creekside PP, LLC, the owner of the vacant properties north of the Creekside Crossing development generally located north of 93rd Street and east of Old Green Bay Road to rezone the proposed 65 single family lots into the R 4.5 Urban Single Family Residential District, to rezone the 7 Outlots (excluding the wetlands) into the PR-1, Neighborhood Park and Recreational District and to rezone the field delineated wetlands into the C-1, Lowland Resource Conservancy District for the proposed Creekside Terrace development. The location of the 100-year floodplain (FPO, Floodplain Overlay District) will remain unchanged at this time.

As you are well aware, we are facing significant challenges at this site. We continue to evaluate the merits and economics of a single-family subdivision at this location and we remain hopeful that a successful neighborhood can be designed for the Creekside property.

Should you have any questions regarding this request, please do not hesitate to contact me. I can be reached at (262) 842-0556 or by email, dan@beardevelopment.com

Thank you for your time and consideration.

Sincerely,

Daniel Szczap
Bear Development, LLC

A. **PUBLIC HEARING AND CONSIDERATION OF A CONDITIONAL USE PERMIT INCLUDING SITE AND OPERATIONAL PLANS** for the request of Jeff Lambert for Rust-Oleum Corporation to replace a 6,000 gallon nitrogen tank with and 11,000 bulk tank at their facility located at 8105 95th Street in LakeView Corporate Park.

Recommendation:

Village staff recommends approval of Conditional Use Permit including Site and Operational Plans subject to the comments and conditions of the Village Staff Report of May 23, 2016.

VILLAGE STAFF REPORT OF MAY 23, 2016

PUBLIC HEARING AND CONSIDERATION OF A CONDITIONAL USE PERMIT INCLUDING SITE AND OPERATIONAL PLANS for the request of Jeff Lambert for Rust-Oleum Corporation to replace a 6,000 gallon nitrogen tank with and 11,000 bulk tank at their facility located at 8105 95th Street in LakeView Corporate Park.

PUBLIC HEARING COMMENTS:

As a part of the hearing record, the Village staff has compiled a listing of findings, exhibits and conclusions regarding the petitioner's request as presented and described below:

Findings of Fact

1. The petitioner is requesting a Conditional Use Permit including Site and Operational Plans to replace a 6,000 gallon nitrogen tank with and 11,000 bulk nitrogen tank at their facility located at 8105 95th Street in LakeView Corporate Park. (See **Exhibit 1**).

2. The property is identified as CSM #1203 located in a part of U.S. Public Land Survey Section 21, Township 1 North, Range 22 East in the Village of Pleasant Prairie and further identified as Tax Parcel Number 92-4-122-212-0355.

3. Pursuant to the application (See **Exhibit 1**):

   a. Rust-Oleum Corporation operates a paint manufacturing facility located in the Lakeview Corporate Industrial Park at 8105 95th Street. The facility produces a variety of both water-based and solvent-based coatings. The plant is made up of a few main areas. The bulk raw material storage tank farm is where liquid solvents and resins are stored. Powder raw materials such as color pigments are stored in the receiving warehouse portion of the plant. These raw materials are then mixed together in tanks of varying sizes to make the finished paint product. The finished product is then filled and packaged on the plant's filling lines. The product can be filled into half-pint cans, quart cans, 1 gallon cans, 5 gallon pails or aerosol spray cans.

   b. This project involves the replacement of 6,000 gallon nitrogen tank with and 11,000 bulk tank.

   c. Nitrogen is used in three main processes within the facility because of its inert, safe properties. The first is that it is used to increase the safety while mixing paint batches. It is pumped into the mixing tanks to displace the oxygen thus reducing the likely hood of a flammable vapor explosion. The second use is to push plugs through the paint transfer piping lines. The plugs help clean the lines between different paint colors. The third use is to help facilitate the offloading of resin tanker trucks. Most of our resins have a high viscosity which makes pumping them from the tankers to the bulk storage tanks difficult and time consuming. The nitrogen is used to slightly pressurize the tankers thus adding help to the transfer pumps.

   d. As a result of increased paint production; Rust-Oleum has determined the need for additional liquefied Nitrogen storage capacity in order to reduce the risk associated with "just-in-time" deliveries to the existing 6,000-gallon storage tank. A usage of 100,000-130,000 cubic feet per day of Nitrogen is anticipated within the next five (5) years. Rust-Oleum currently receives 4-5 partial loads per week due to the fact that the 6,000 gallon tank cannot hold a full tanker and keep a sufficient safety stock. The vendor did not supply nitrogen in a timely fashion last fall which resulted in shutting the entire plant down for 3 hours. Rust-Oleum has since determined the most efficient and least costly storage arrangement is to replace the existing 6,000 gallon tank with an 11,000 gallon tank. The tank will be vertical, single-walled carbon steel tank similar to the existing tank. It will be 9'-6'' in

diameter and 32'-8" in straight side height and will be fabricated in accordance with NFPA 55. The existing tank being replaced is 27'-6" above grade. The existing building height is 32'-0".

e. The storage tank will sit on top of an existing concrete pad after the existing tank is removed. The new larger vaporizer set will be placed on the existing pad next to the nitrogen tank. A six foot high chain link fence will be installed around the tank and new vaporizer location with 6" concrete filled pipe bollards per NFPA requirements. No new electrical or lighting is anticipated. The entire arraignment is located within the rear fenced area of the site that is monitored by security cameras.

4. The current zoning of the property is M-2, General Manufacturing District and High-Hazard Group H Uses within the District pursuant to Chapter 3 of the 2006 International Commercial Code are allowed within the District on this property with the approval of a Conditional Use Permit.

5. Previous Conditional Use Permits approved for this property include:

a. Kenosha County Resolution #94 was approved on July 27, 1988 for a Conditional Use Permit to operate a manufacturing, research and development facility for Rust-Oleum Corporation.

b. Conditional Use Grant Document #92-009 was approved by the Village on November 11, 1992 for the storage of product on site.

c. Conditional Use Grant Document #95-017 was approved by the Village on November 6, 1995 to construct a 480 sq ft building to be used in the recovery of paint and propellant from returned/rejected aerosol containers.

d. Conditional Use Grant Document #96-01 was approved by the Village on April 1, 1996 to construct housing for equipment used to inject propellant into aerosol cans.

e. Conditional Use Grant Document #03-03 was approved by the Village on February 10, 2003 for the installation of thermal oxidizer and relocation of maintenance office (interior).

f. Conditional Use Grant Document #07-01 was approved by the Village on April 9, 2007 to construct a 3,320 square foot addition for testing new products with proper temperature and humidity controls. In addition, the emergency access roadway was re-routed to accommodate the addition.

g. Conditional Use Grant Document #12-07 was approved by the Village on October 8, 2012 to install a new aerosol spray-paint filling equipment that includes the installation of a 192 square foot pre-fabricated structure located on a concrete pad outside rear of the facility located at 8105 95th Street that will house the required equipment that adds propellant to the cans.

h. Conditional Use Grant Document #13-07 was approved on September 9, 2013 to install new aerosol spray-paint can filling equipment that includes the installation of a 320 square foot pre-fabricated structure that will be located outside on a concrete pad in the rear of the facility that will house the required equipment that adds propellant to the cans.

i. Conditional Use Grant Document #13-08 was approved on September 9, 2013 to install a new aerosol spray-paint filling equipment which includes the installation of a 192 square foot pre-fabricated structure that will house the required equipment that adds propellant to the cans outside in the rear of the facility.

j. Conditional Use Grant Document #15-05 was approved on October 26, 2015 to install a new propellant storage tank (30,000 gallons) on the west side of the facility.

6. Notices were sent to adjacent property owners via regular mail on May 3, 2016 and notices were published in the Kenosha News on May 9 and May 16, 2016.

7. The petitioner was e-mailed a copy of this memo on May 20, 2016.

8. According to the Article XVIII of the Village Zoning Ordinance, the Plan Commission shall approve a Conditional Use Permit if they find after viewing the findings of fact, the application and related materials that the project as planned, will not violate the intent and purpose of all Village Ordinance and meets the minimum standards for granting of a Conditional Use Permit. Furthermore, the Plan Commission shall approve any site and operational plan application if after finding in the decision that the application, coupled with satisfaction of any conditions of approval, will comply with all applicable Village ordinance requirements and all other applicable Federal, State or local requirements relating to land use, buildings, development control, land division, environmental protection, sewer service, water service, noise, storm water management, streets and highways and fire protection.

Village Staff Conclusions and Recommendation: (to be read out loud)

The Village staff has determined that based upon the foregoing information presented in the application, at the public hearing and the memorandum from the Fire & Rescue Department that the project meets the following standards for granting a Conditional Use Permit and Site and Operational Plan approval in that the project:

- The project does not impede the traffic patterns on the site or cause traffic congestion or traffic circulation problems and the traffic patterns on the site do not hinder, harm or distract the provisions of public services.
- The project does not impair an adequate supply of light and air to the adjacent properties.
- The project does not increase danger of fire, insofar as the danger of fire does not exceed the capabilities of the Village Fire & Rescue Department.
- The project does not create storm water flooding or drainage, create obnoxious odors, problems or otherwise endanger the public health, safety or welfare.
- There are no existing identified hazard, danger, harm, noxiousness, offensiveness, nuisance or other adversity or inconsistency that would endanger the public's health, safety or welfare related to the proposed use.
- The proposed and applied for use on this particular parcel is not inherently inconsistent with the M-2, General Manufacturing District in which it is located or the adjoining zoning districts and land uses.

Based on the foregoing information, the Village staff recommends that if the Plan Commission determines that the petitioner has met the specific standards for granting of a Conditional Use Permit and Site and Operational Plan approval as specified above; then approval of the Conditional Use Permit and Site and Operational Plan shall be approved subject to the following conditions:

1. Prior to issuance of permits, written approval from LakeView Corporate Park Business Owners Association shall be submitted to ensure compliance with the Protective Covenants and Development Standards of the LakeView Corporate Park. Contact Ed Harrington with CenterPoint for plan review and to obtain Association approval.

2. Continued compliance with all previously approved and valid Conditional Use Permits that were recorded at the Kenosha County Register of Deeds Office for this property is required.

3. The project shall comply with all provisions of NFPA 55 including but not limited to: fencing, bollards and signage including NFPA 704 placards.

4. The tank shall be grounded and bonded properly to eliminate any potential static electrical energy.

5. **Upon approval of the Village will prepare the required Conditional Use Grant Document to be executed by the property owner prior to issuance of the required permits. After the document is executed, it shall be recorded at the Kenosha County Register of Deeds office at the owner's expense.**

6. This Conditional Use Grant shall become effective upon the execution and recording of said document and shall constitute an effective covenant running with the land.

7. Construction and operation of the use granted shall be in strict conformity to the approved plans filed in connection with the petition for this permit. Violations of these conditions may result in the revocation of the conditional use permit or zoning violation prosecution, or both.

8. All required permits shall be obtained from the Village prior to commencing work. At a minimum a Commercial Electrical Permit will be required from the Building Inspection Department and a fence permit will be required from the Community Development Department.

9. The property owner shall comply with all provisions of the Conditional Use Permit and Site & Operational Plan submittal, including compliance with the Village Performance Standards.

10. Operation of the use granted herein shall be in strict conformity to both plans and documents filed and approved in connection with the petition for Site and Operational Plan approval. Any violation of these conditions may result in the revocation of the approval or zoning violation prosecution, or both.

11. No use shall be conducted in such a way as to constitute a public or private nuisance or to violate any of the performance standards set out in Section 420-38 of the Village Zoning Ordinance.

12. The Conditional Use Grant is subject to amendment and termination in accordance with the provisions of the Village General Zoning and Floodplain/Shoreland Zoning Ordinance.

13. All plans and the proposed and applied for use shall conform to applicable Village Ordinance requirements, and to all other applicable local, County, State and Federal requirements relating to land use, buildings, development control, land division, environmental protection, sewer service, water service, storm water management, noise, streets and highways and fire protection; and in the event of conflicting requirements or standards, the most restrictive shall apply.

14. If permits are not issued within said 180 days the Site and Operational Plan approval said approval shall be void.

RECEIVED

Exhibit 1

APR 21 2016

PLEASANT PRAIRIE

VILLAGE OF PLEASANT PRAIRIE

VILLAGE OF PLEASANT PRAIRIE
SITE AND OPERATIONAL PLAN
AND CONDITIONAL USE PERMIT ZONING APPLICATION

USE THIS FORM FOR:
Tenants/Use changes proposing to occupy 50% or more of an existing commercial/industrial building.

To construct a **new** or addition to principal or accessory structure.

Use requires a Conditional Use Permit.

FOR OFFICE USE ONLY
Application Filed on _____ 20__
Preliminary Determination of Completeness on: _____ 20__
Revised Plans Submitted: _____ 20__
☐ Public Hearing Required: Hearing Date: _____, 20__ Published on: _____ and _____, 20__ Notices sent on: _____, 20__
Approved by ☐ Plan Commission on _____ 20__ ☐ Zoning Administrator on _____ 20__
Denied by ☐ Plan Commission on _____ 20__ ☐ Zoning Administrator on _____ 20__

SECTION 1: GENERAL INFORMATION

NAME OF BUSINESS: Rust-Oleum Corp.

SITE ADDRESS: 8105 95th St Pleasant Prairie, WI 53158

BRIEF PROJECT DESCRIPTION: Replace a 6000 gal Nitrogen tank with a 11,000 gallon bulk tank.

PROPOSED NUMBER OF FULL TIME EMPLOYEES: Currently 293

PROPOSED NUMBER OF PART-TIME EMPLOYEES: _____

SITE SIZE: 253,000 **sq. ft.** 28 acres **acres**

PROPOSED BUILDING SIZE: X **sq.ft. HEIGHT:** X **ft.**

PROPOSED ADDITION SIZE: X **sq.ft. HEIGHT:** X **ft.**

LEGAL DESCRIPTION: CSM #1203 located in a part of the Northwest One Quarter of U.S. Public Land Survey Section 21, Township 1 North Range 22 East of the fourth Principal Meridian Lying + being in the Village of Pleasant Prairie

TAX PARCEL NUMBER(S) : 92-4-122-212-0355

CURRENT ZONING CLASSIFICATION(S) OF THE PROPERTY: M2

1. **Is a zoning map amendment proposed with this project?** ☐ **Yes** ☒ **No**
   - **If yes**, proposed Zoning Classification(s): _____
2. **Is a zoning text amendment proposed with this project?** ☐ **Yes** ☒ **No**
   - **If yes**, provide a copy of the proposed text amendment with this application

3. **If property is zoned M-1 or M-2, indicate the Occupancy Type pursuant to the Use and Occupancy Classification specified in Chapter 3 of the 2006 International Building Code (2006 IBC). Include all that apply and associated square footage for each classification:**

- ☒ **Factory Group F-1 (Moderate-hazard)** 253,000 sq ft
- ☐ **Factory Group F-2 (Low-hazard)** _____ sq ft
- ☐ **Storage Group S-1 (Moderate-hazard)** _____ sq ft
- ☐ **Storage Group S-2 (Low-hazard)** _____ sq ft
- ☐ **Business Group B** _____ sq ft
- ☐ **High-Hazard Group H*** _____ sq ft
- ☐ **Other** _____ _____ sq ft
- ☐ **Other** _____ _____ sq ft

If Use and Occupancy Classification is High-Hazard Group H please provide a detailed written narrative that explains the specific use, quantity of storage and handling of the high hazard materials along with appropriate MSSD sheets with this application.

PUBLIC SERVICES:

1. **Is the property serviced by Public Sanitary Sewer?** ☒ **YES** ☐ **NO**
   - **If no,** the closest public sewer is located at _____
2. **Is the property serviced by Public Water?** ☒ **YES** ☐ **NO**
   - **If no,** the closest public water is located at _____
3. **Maximum number of gallons/minute of water expected to be used per day is:** No Change.

THIS APPLICATION IS FOR A: **(check one)**

- ☐ **Preliminary Site and Operational Plan:** An applicant may apply for preliminary site and operational plan approval in connection with an erosion control permit application for early mass grading, or in connection with an early foundation permit, or for other good cause shown
- ☒ **New Site and Operational Plan**
- ☐ **Amendment to an existing Site and Operational Plan**
  - **Date of initial site and operational plan approval:** _____
  - **Date of each approved amendment:** _____

SECTION 2: EXISTING USES AND BUILDINGS ON THE SITE

Are there any existing buildings on the site? ☒ **YES** ☐ **NO**

- **If yes,** provide an attachment that explains the current uses on the property and current uses in each building and if the use(s) is proposed to continue; and the gross floor area and height of each building.
- **If no,** what is the current use of the property? _____

SECTION 3: PHOTOGRAPHS

Standard-sized photographs (not Polaroid) showing all aspects of the site (e.g. locations of proposed improvements, bodies of navigable water, wetlands, wooded areas, etc.) and of the exterior of structures or other site improvements, together with a statement regarding each photograph, which includes the date the photograph was taken, the location from which it was taken, the direction in which the camera was pointed, and a description of what is shown in the photograph. With respect to all existing signs, the applicant shall file photographs of all existing signs and shall specify in the written statement accompanying each such photograph and show the dimensions of such sign. Digital images are acceptable.

SECTION 4: CONDITIONAL USE

1. **Does the proposed project require a Conditional Use Permit?** ☒ **YES** ☐ **NO**
   - **If no** then skip to Section 5.
   - **If yes**, then continue with this Section.
2. **Are you amending an existing Conditional Use Permit?** ☐ **YES** ☒ **NO**
   - **If yes**, provide a copy of the Conditional Use Grant Document you are proposing to amend.
   - **If no**, continue with this Section.
3. If you answered **YES** to either question 1 or 2 above then this application shall include information as to how the proposed project will not impair an adequate supply of light and air to adjacent properties; increase danger of fire; cause traffic congestion or traffic circulation problems; create storm water flooding or drainage; create obnoxious odors, problems or otherwise endanger the public health, safety or welfare; will not hinder, harm or distract the provision of public services; and that the proposed project is not inherently inconsistent with either the district in which it is located or adjoining districts or neighborhoods as required pursuant to the Village Zoning Ordinance.

SECTION 5: NON-CONFORMING USE

1. **Is any use on the site a nonconforming use?** ☐ **YES** ☒ **NO**
   - **If no**, then skip to Section 7.
   - **If yes**, then continue with this section.
2. If you answered **YES** to question 1 above, prima facie proof of each element of legal nonconforming use status shall be submitted to the Village with this application (i.e. that the nonconforming use was legal in its inception, that the use was active and actual and not merely casual, occasional, incidental or accessory when it became nonconforming, that the use has been continuous with no gap of 12 or more consecutive months since it became nonconforming, that no building or structure housing the nonconforming use has been structurally repaired or altered to the extent of fifty (50) percent or more of its assessed value since the use became nonconforming, and that the use has not been changed in nature or physically extended or expanded since becoming nonconforming).

SECTION 6: PERFORMANCE STANDARDS

Pursuant to the Village Zoning Ordinance, any application for a permit under this ordinance or any use subject to the regulations and standards set forth in the Village Zoning Ordinance shall be accompanied by a sworn statement by the owner of the subject property that said property and use will be operated in accordance with the performance standards set forth in Section 420-38 of the Village Ordinance. Continued compliance with the regulations and standards is required. Violations of such standards shall remedied as required by the Village Zoning Ordinance.

No land or building in any district shall be operated in such a manner so as to create any dangerous, injurious, noxious or otherwise objectionable fire, explosive or other hazard; noise or vibration, smoke, dust, dirt or other form of air pollution; water pollution; electrical, radioactive or other disturbances; glare; or other substance, condition or element (referred to herein as "dangerous or objectionable elements") in such amount as to adversely affect the surrounding area or premises; provided that any use permitted by this ordinance may be undertaken and maintained if it conforms to the regulations of this subsection limiting dangerous and objectionable elements at the specified point or points of the determination of their existence.

The Village may require additional information be submitted to ensure that the Village Performance Standards are being met.

SECTION 7: PLAN COMPONENTS

The application shall include a list of all documents, materials or information that are attached to and a part of the application form. Submit eight (8) full-sized and one (1) set reduced to 11" x 17" of all plans and other attachments shall be included as part of this application, except if a component has been waived or deferred in writing by the Village Zoning Administrator. **For specific details related to each of the required information and plans see the attachment entitled "*Plan Components and Related Standards*" in Section 420-57 of the Village Zoning Ordinance.**

- ☒ Application—Applicant, Site, Use, Project and Plan Information
- ☒ Application fee
- ☒ Operational plan
- ☒ Title sheet
- ☐ Survey
- ☒ Site plan
- ☐ Grading and drainage plan
- ☐ Building and fire protection plans
- ☐ Lighting plan
- ☐ Landscape and open space plan
- ☐ Signage plan
- ☐ Industrial/commercial waste survey
- ☐ Performance standards compliance
- ☐ Additional requirements, as determined by the Village Zoning Administrator, other appropriate Village staff members, or the Village Plan Commission, as appropriate.

Two or more plans may be combined, provided that all of the information submitted on the combined plan is clearly legible, but in no case shall the combined plans fail to show any of the information required for each individual plan as described below, unless such information is waived or deferred pursuant to the Zoning Ordinance.

SECTION 8: SIGNATURES

I,(We), hereby certify that all the above statements and all attachments submitted herewith are true and correct to the best of my knowledge. In addition I, (we) understand the requirements and procedures for Site and Operational Plan/Conditional Use Permit approval.

PROPERTY OWNER:

Name: Rust-Oleum Corporation
(Please Print)

Signature: William C. Whiting, Exec. V.P.

Address: 11 Hawthorn Parkway

Vernon Hills, IL 60061
(City) (State) (Zip)

Phone: _____

Fax: _____

E-mail: _____

Date 4-11-2014

APPLICANT:

Name: JEFF LAMBERT
(Please Print)

Signature: Jeff Lambert

Address: 8105 95th Street

Pleasant Prairie WI 53158
(City) (State) (Zip)

Phone: 262-947-6740

Fax: 262-947-8262

E-mail: jlambert@rustoleum.com

Date: 4-6-16

Is the applicant the owner of the property? ☒ **YES** ☐ **NO**

If no, then either proof of the applicant's legal interest in the subject real property (e.g. accepted offer to purchase, lease, etc., which may be appropriately redacted to preserve confidential information) or written authorization signed by the owner for the applicant to act as the owner's agent in connection with the application shall be included with the application.

DEVELOPER (if Applicable)

Name: _____
(Please Print)

Signature: _____

Address: _____

_____
(City) (State) (Zip)

Phone: _____

Fax: _____

E-mail: _____

Date _____

USER OR OCCUPANT OF SITE:

Name: _____
(Please Print)

Signature: _____

Address: _____

_____
(City) (State) (Zip)

Phone: _____

Fax: _____

E-mail: _____

Date: _____

Operational plan.

(1) Operational plan requirements. The applicant shall prepare and file as part of the application for site and operational plan approval an operational plan which shall include at least the following information or materials:

(a) A detailed narrative description of the operations, processes and functions of the existing and proposed uses to be conducted in or on the real property constituting the site, together with any diagrams, maps, charts or other visual aids that are helpful in understanding the operations and any potential adverse impacts on neighboring properties.

Rust-Oleum Corporation operates a paint manufacturing facility located in the Lakeview Corporate Industrial Park at 8105 95th Street in Pleasant Prairie, Wisconsin. The facility produces a variety of both water-based and solvent-based coatings. The plant consists of several main production areas described as follows: The bulk raw material storage tank farm is used for liquid solvent and resin storage. The powder-based raw materials such as color pigments are stored in the receiving warehouse portion of the plant. The raw materials are mixed together in process tanks of varying sizes to produce finished paint product. The finished product is then filled and packaged on the plant's filling production lines. The finished product can be filled into half pint cans, quart cans, 1-gallon cans, 5-gallon pails, or aerosol spray cans.

(b) A detailed description of the proposed project or activity giving rise to the need for site and operational plan approval and a detailed explanation of how such project or activity relates to the site and to the existing or proposed operations to be conducted in or on the real property constituting the site.

Nitrogen is used in three main processes within the facility because of its inert, safe properties. The first is that it is used to increase the safety while mixing paint batches. It is pumped into the mixing tanks to displace the oxygen thus reducing the likely hood of a flammable vapor explosion. The second use is to push plugs through the paint transfer piping lines. The plugs help clean the lines between different paint colors. The third use is to help facilitate the offloading of resin tanker trucks. Most of our resins have a high viscosity which makes pumping them from the tankers to the bulk storage tanks difficult and time consuming. The nitrogen is used to slightly pressurize the tankers thus adding help to the transfer pumps.

As a result of increased paint production; Rust-Oleum has determined the need for additional liquefied Nitrogen storage capacity in order to reduce the risk associated with "just-in-time" deliveries to the existing 6,000-gallon storage tank. A usage of 100,000-130,000 cubic feet per day of Nitrogen is anticipated within the next five (5) years. Rust-Oleum currently receives 4-5 partial loads per week due to the fact that the 6,000 gallon tank cannot hold a full tanker and keep a sufficient safety stock. The vendor did run us out of Nitrogen last fall and shut the entire plant down for 3 hours. Rust-Oleum has determined the most efficient and least costly storage arrangement is to replace the existing 6,000 gallon tank with an 11,000 gallon tank. The tank will be vertical, single-walled carbon steel tank similar to the existing tank. It will be 9'-6" in diameter and 32'-8" in straight side height and will be fabricated in accordance with NFPA 55. The existing tank being replaced is 27'-6" above grade. The existing building height is 32'-0".

The storage tank will sit on top of existing concrete pad after the existing tank is removed. The new larger vaporizer set will be placed on the existing pad next to the nitrogen tank. A six foot high chain link fence will be installed around the tank and new vaporizer location with 6" concrete filled pipe bollards per NFPA requirements. No new electrical or lighting is anticipated. The entire arraignment is located within the rear fenced area of the site that is monitored by security cameras.

(c) Gross floor area of the existing building(s) and/or proposed addition.

The size of the existing facility is 253,192 square feet. The size of the new concrete pad is 19' x 19' or 361 sqft.

(d) Anticipated hours of operation, hours open to the public, and hours of deliveries or shipments.

The facility is not open to the public. The facility standard hours of operation are 24 hours per day, broken into four (4) shifts, seven (7) days per week. Deliveries can occur during any of these hours of operation and will reduce from 4-5 partial loads per week to 1-2 full loads per week.

(e) Anticipated startup and total number of full- and part-time employees.

(f) Anticipated number of shifts and the anticipated number of employees per shift.

Start-up of the Nitrogen Bulk Tank Expansion is anticipated at the end of June 2016. There are currently 293 full-time employees for the entire facility. Additional staff is not anticipated for this project.

(g) Anticipated maximum number of employees on site at any time of the day.

The most employees in the entire plant at any given time would include all of 1st shift R&D employees and all production staff at shift change between the night and day shift, which totals 170 employees.

(h) Number of anticipated students, participants or persons to be gathered in places of assembly, if applicable.

Not applicable.

(i) Number of parking spaces required per this chapter and the method used to calculate such number.

(j) Number of existing and proposed on-site parking spaces to be provided (conventional spaces and handicapped accessible spaces to be stated separately).

(k) Anticipated daily average and maximum potential number of automobile trips to and from the site (excluding trucks).

No additional parking spaces will be required for this project.

(l) Anticipated daily average and maximum potential number of truck trips to and from the site.

Nitrogen deliveries will decrease from an average of four (4) deliveries per week to a maximum of two (2) deliveries per week.

(m) Types and quantities of goods and materials to be made, used or stored on site.

Nitrogen is used in paint production as described in Item 1b.

(n) Types of equipment or machinery to be used on site.

No additional machinery is anticipated for this project.

(o) Types and quantities of solid or liquid waste materials which will require disposal.

No additional waste materials will be generated from this project.

(p) Method of handling, storing and disposing of solid or liquid waste materials.

There will be no new waste streams from this new Nitrogen Bulk Tank.

(q) Methods of providing site and building security other than the Village Police Department.

The facility is also surrounded by a 6'-0" high chain-linked fence and gates that prevent public access except at designated entrance locations. Security cameras are also monitored at entrances and critical interior operations.

(r) Description of the methods to be used to maintain all buildings, structures, site improvements and sites in a safe, structurally sound, neat, well cared for and attractive condition.

Maintenance of the new tank will be incorporated into the systems and operations used to maintain existing buildings and landscaping.

(s) Description of potential adverse impacts to neighboring properties or public facilities and measures to be taken to eliminate or minimize such adverse impacts.

Rust-Oleum is confident that there will be no adverse impacts to neighboring properties and/or public facilities. Rust-Oleum has sound safety and environmental procedures in place to mitigate the impact of any unforeseen issue. All setbacks from property lines and other important buildings are within State and NFPA 30 Code requirements and therefore there is no anticipated increase in risk of fire, impairment of light and air to adjacent properties, the creation of obnoxious odors, or other dangers to public health.

(t) A list of all local, Kenosha County (highway access), State and federal permits or approvals required for the project or activity giving rise to the need for site and operational plan approval. Provide copies of such permits and approvals that have been obtained.

Rust-Oleum is in full compliance with all Federal, State and Local operating permits and approvals. The facility currently has a Registration Operation Permit (ROP) for air emissions with the WDNR. As long as Rust-Oleum continues to meet the requirements of this permit, changes can be made at the facility without notification of the WDNR.

To the best of our knowledge, this project is consistent with the district in which it is located, adjoining districts, and neighborhoods, pursuant to the Village Zoning Ordinance.

(2) Operational plan standards. In addition to any other applicable requirements or standards specified in this chapter, the following requirements or standards shall apply to the operational plan:

(a) No use shall be conducted in such a way as to constitute a public or private nuisance.

The equipment will not be operated in a manner that will cause a public or private nuisance.

(b) No use shall be conducted in such a way as to violate any of the performance standards set out in § 420-38 of this chapter.

Rust-Oleum will not use or operate the Bulk Storage Tank System in a manner that would cause a violation to 420-38 of this Chapter.

(c) (reserved)

(d) No owner, occupant or user of real property shall conduct a use so intensively that there is inadequate provision of on-site parking spaces and/or loading spaces to accommodate the needs of such use.

No additional parking spaces will be required for this project.

(e) All buildings, structures, site improvements and sites shall be maintained in a safe, structurally sound, neat, well cared for and attractive condition.

The new storage tank will be painted white to match the existing facility. Pipe bollards will be painted yellow increase visibility for safe operation.

(f) Within a building, any provision of live entertainment in connection with a business or club use involving the selling or service of alcoholic beverages shall comply with the following restrictions:

[1] Live entertainment shall be provided only on a raised platform that is not less than 23 inches higher than the elevation of the surrounding floor surfaces where customers, members or their guests are sitting, standing or dancing;

[2] Customers, members or their guests shall at all times be separated from the raised platform on which live entertainment is being provided by a distance of not less than four feet and a physical barrier to mark and enforce such separation distance; and

[3] There shall be no touching of any kind between entertainers and customers, members or their guests.

Not applicable.

(g) No proposed new or expanded use shall be permitted to create or significantly exacerbate unsafe traffic conditions on any street or highway in the Village.

There are no changes planned for the entrances to the Rust-Oleum facility, therefore, we do not anticipate any unsafe traffic conditions on Village streets or highways.

(h) Indoor pyrotechnic displays are prohibited.

Not applicable.

Signature

4-11-2016
Date

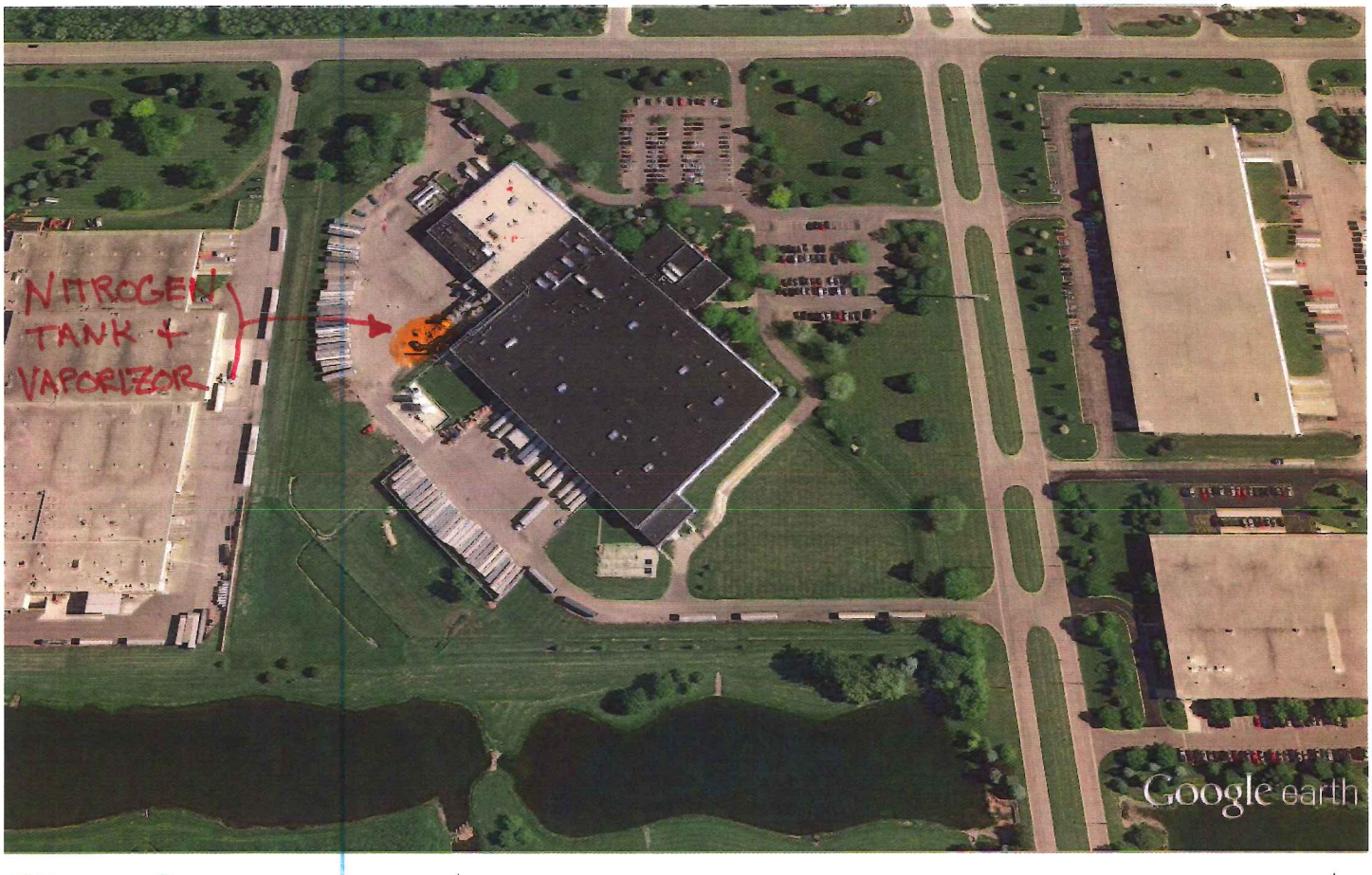

Google earth

feet 900
meters 200

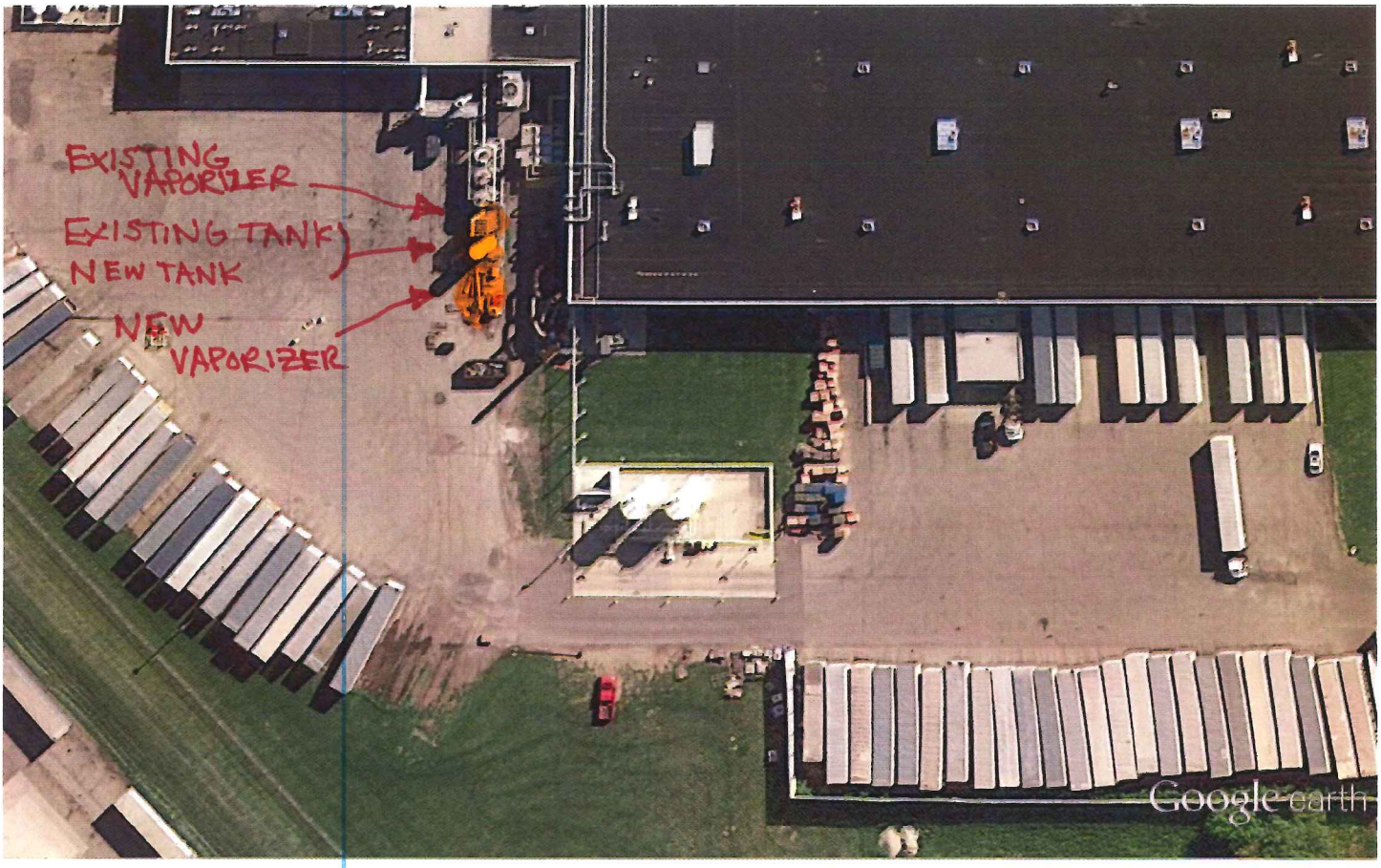

Google earth

feet 300
meters 90

REVISION			
SYM	DESCRIPTION	DATE	DRAWN
A	ADDED PROPELLANT TANK	12/1/15	JAL

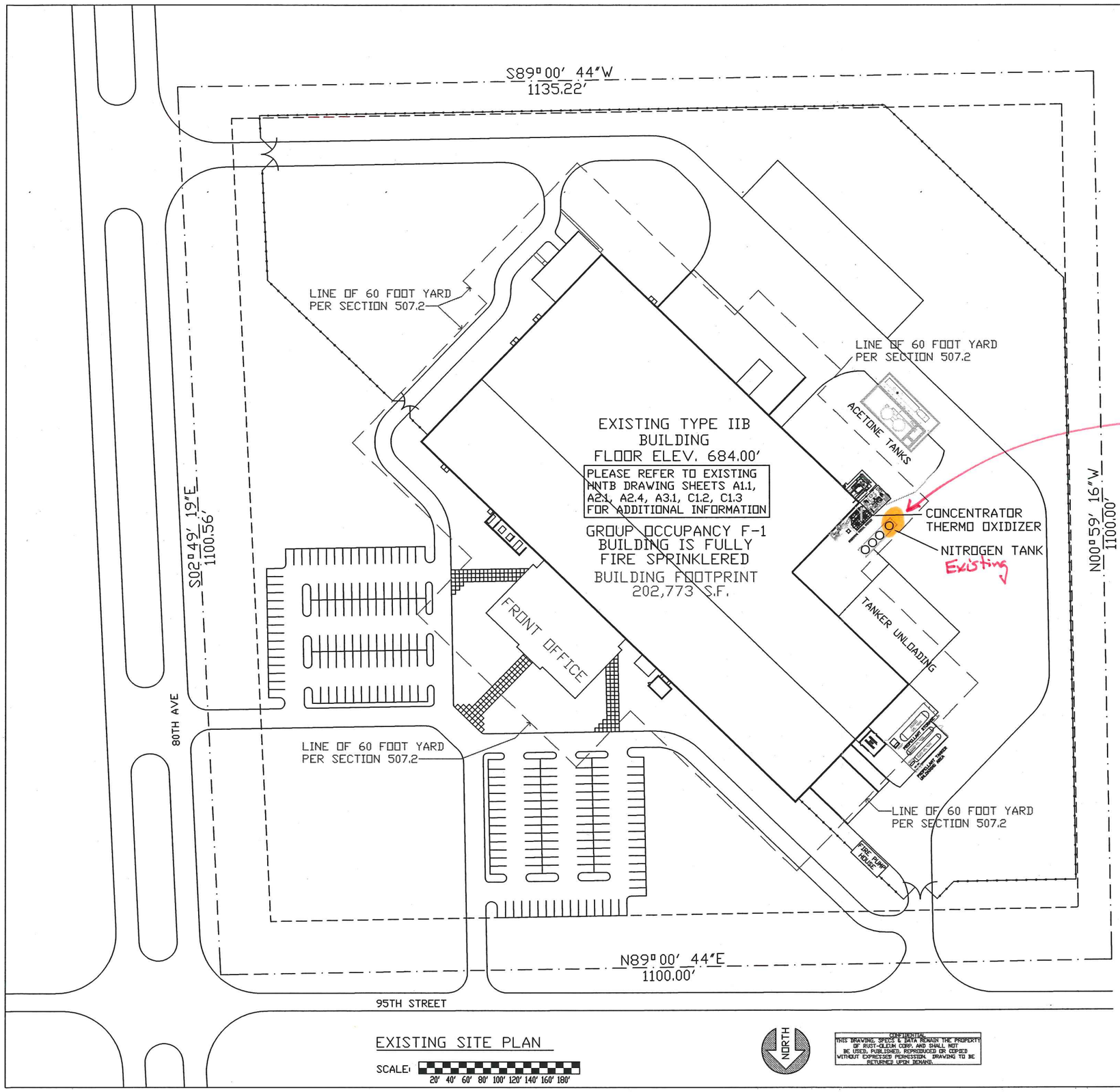

EXISTING SITE PLAN

SCALE: 20' 40' 60' 80' 100' 120' 140' 160' 180'

NORTH

CONFIDENTIAL
THIS DRAWING, SPECS & DATA REMAIN THE PROPERTY OF RUST-OLEUM CORP. AND SHALL NOT BE USED, PUBLISHED, REPRODUCED OR COPIED WITHOUT EXPRESSED PERMISSION. DRAWING TO BE RETURNED UPON DEMAND.

NOTES
EXISTING BUILDING FULLY SPRINKLERED IN ACCORDANCE WITH CHAPTER 9, WISCONSIN ENROLLED COMMERCIAL CODE. NEW ADDITION FULLY SPRINKLERED IN ACCORDANCE WITH CHAPTER 9, WISCONSIN ENROLLED COMMERCIAL CODE.

NOTES
ALL FEDERAL, STATE AND LOCAL CODES AND AMERICANS WITH DISABILITIES ACT REQUIREMENTS ARE INCORPORATED INTO THESE DOCUMENTS BY REFERENCE. EACH CONTRACTOR AND SUBCONTRACTOR SHALL COMPLY WITH ALL APPLICABLE PROVISIONS. DEVIATION FROM PLANS & SPECIFICATIONS REQUIRE A WRITTEN REQUEST FROM THE CONTRACTOR AND A WRITTEN RESPONSE FROM THE ARCHITECT/ENGINEER. ALL DISCREPANCIES IN CONSTRUCTION DOCUMENTS AND SPECIFICATIONS ARE TO BE RESOLVED IN WRITING PRIOR TO COMMENCEMENT OF WORK ON THE ITEM IN QUESTION. ELECTRICAL/PLUMBING/HVAC ALL WORK TO BE DONE IN STRICT COMPLIANCE WITH STATE & LOCAL CODES AND THE AMERICANS WITH DISABILITIES ACT. ELECTRICAL, PLUMBING AND HVAC DESIGN AND CONSTRUCTION DOCUMENTS TO BE SUBMITTED FOR APPROVAL BY THE APPROPRIATE SUBCONTRACTORS. ALL PENETRATIONS THROUGH RATED ASSEMBLIES TO BE U.L. APPROVED.

DIMENSIONAL TOLERANCES UNLESS OTHERWISE SPECIFIED			
FRAC.	XXDEC.	XXXDEC.	ANG.
± 1/64	± 1/64	± .005	± 30'

RUST-OLEUM CORPORATION PLEASANT PRAIRIE WI 53158

THE INFORMATION DISCLOSED HEREIN WAS ORIGINATED BY AND IS THE PROPERTY OF THE RUST-OLEUM CORPORATION. RUST-OLEUM RESERVES ALL PATENT, PROPRIETARY, DESIGN, USE, SALE, MANUFACTURING REPRODUCTION RIGHTS THEREIN.

RUST-OLEUM CORP. Pleasant Praire Plant Site Plan

MATERIAL	FINISH		
~	~		
DRAWN: JAL	DATE: 3/12/08	INV. NO.	SER. NO.
CHECKED	APPROVED	SIZE	SCALE: N.T.S.
DWG. NO.	SHT 1 OF 1		

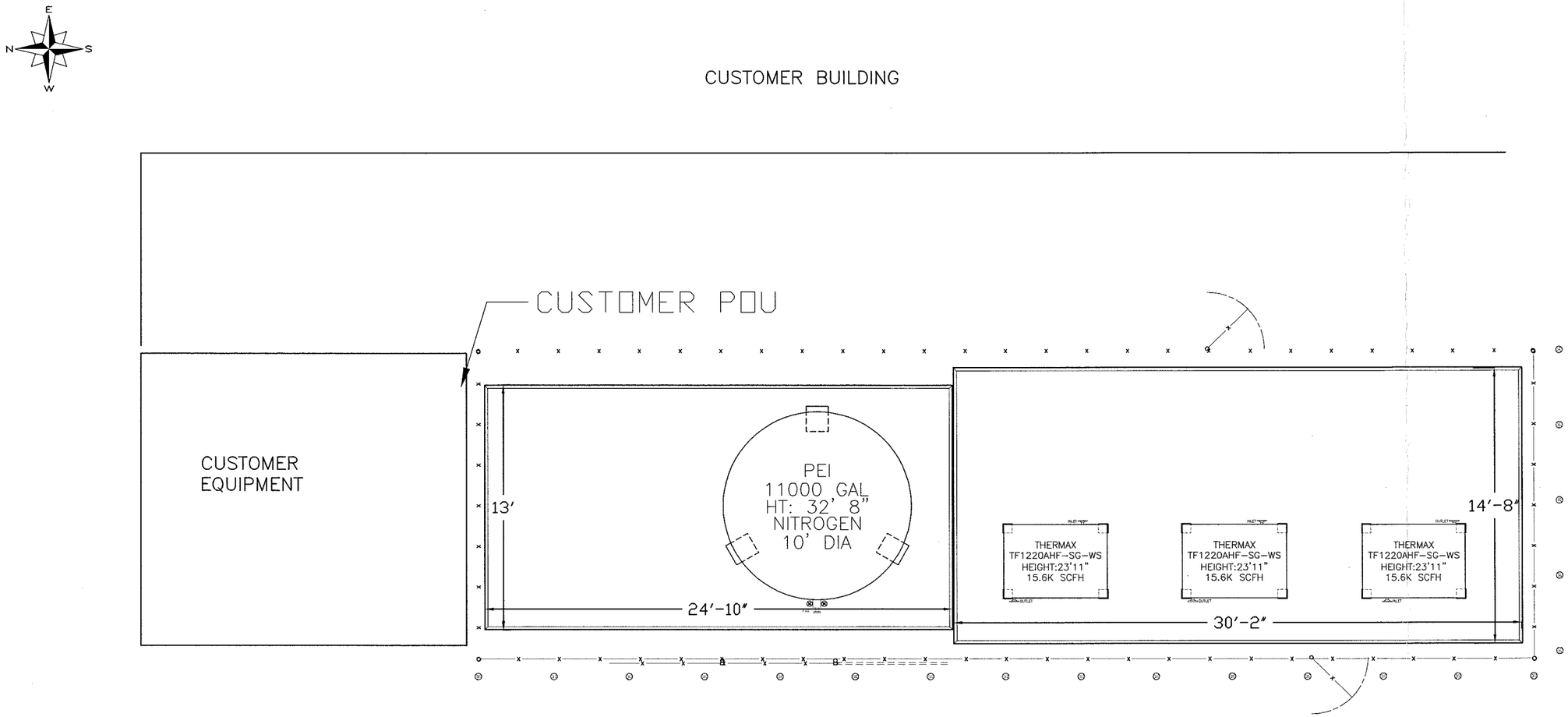

NOTES:

1. TANK PAD IS 20" THICK.
2. VAPORIZER PAD IS 14" THICK.
3. GATES TO BE INSTALLED FOR FILL ACCESS (SLIDING PREFERRED) AND SECONDARY EXIT. (REFERENCE STA 1023)
4. BOLLARDS TO BE INSTALLED IN AREAS EXPOSED TO VEHICULAR TRAFFIC. (REFERENCE STA 1023)

PRELIMINARY

REV	DATE		DWN	CHK	APVD	REV	DATE		DWN	CHK	APVD	REV	DATE		DWN	CHK	APVD
												0	4/19/16	DRAWING CREATION	CM	XXX	XXX

DATE 4/19/16 | DRAWN BY C. MAK
JOB No. ACE # | APPRD. / D.A. F. LAST
COMPUTER FILE CSA-2016062.DWG

CONFIDENTIAL

THE INFORMATION CONTAINED HEREIN IS PROPRIETARY INFORMATION OF AIR LIQUIDE INDUSTRIAL U.S. LP AND SHALL BE USED SOLELY FOR THE PURPOSE OF THIS DRAWING. THE USER HAS NO ANY PURPOSE WHATSOEVER EXCEPT AS SPECIFICALLY PERMITTED PURSUANT TO WRITTEN AGREEMENT WITH AIR LIQUIDE INDUSTRIAL U.S. LP

AIR LIQUIDE™

AIR LIQUIDE
INDUSTRIAL U.S. LP
HOUSTON, TEXAS

SITE LAYOUT
11,000 GAL NITROGEN
RUST OLEUM
PLEASANT PRAIRIE, WI

PAGE: 1 OF 1 | REV. No. 0
DWG. No. CSA-2016062

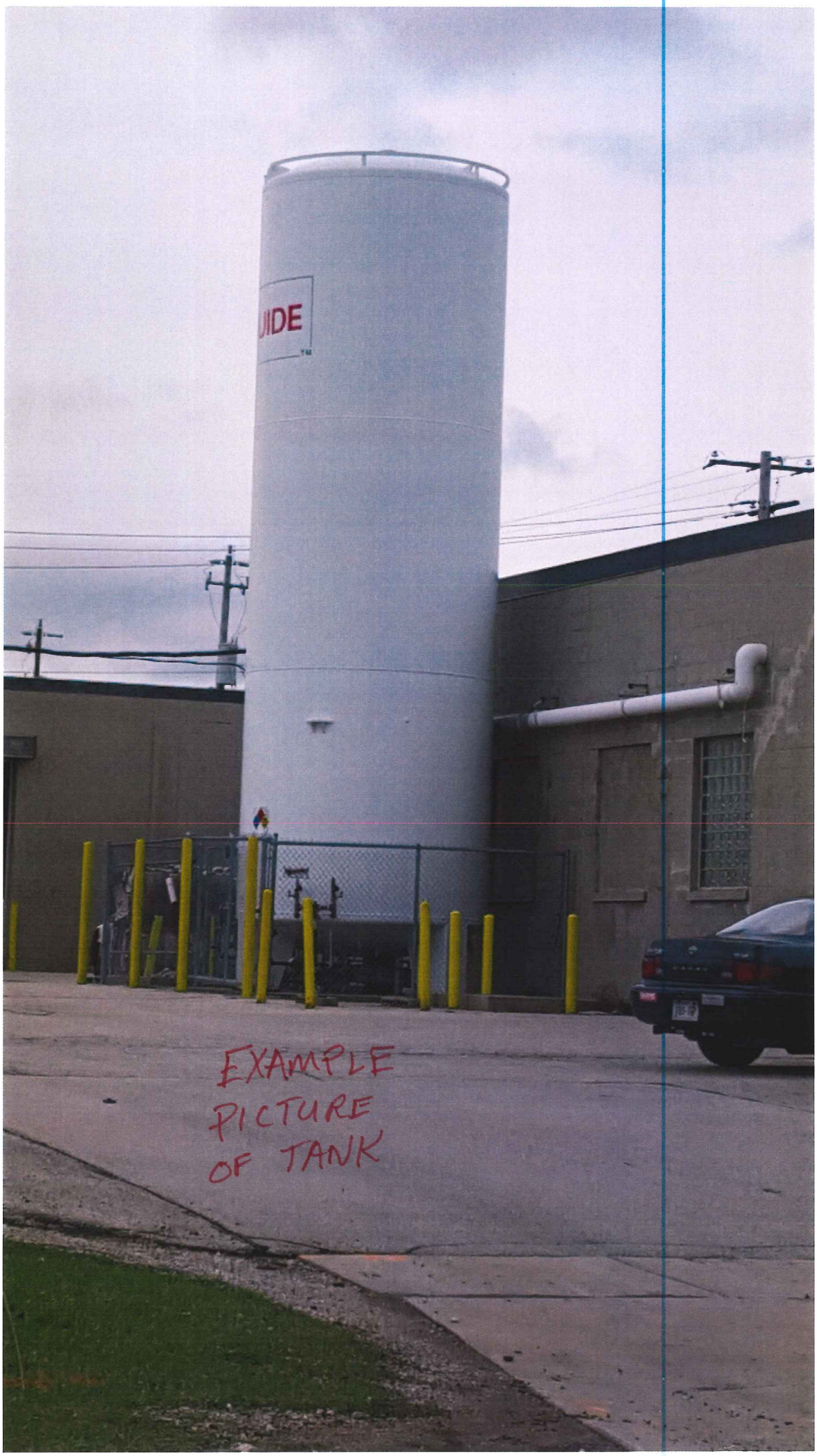
UIDE
EXAMPLE
PICTURE
OF TANK

B. **PUBLIC HEARING AND CONSIDERATION OF A ZONING TEXT AND ZONING MAP AMENDMENTS** for the request of Jeffery Marlow, President of Lexington Homes Inc., for the proposed development of a 60-unit apartment building on the property located north of 97th Court and west of 94th Avenue in the Prairie Ridge Development to be known as Skyline Towers. Specifically the property is proposed to be rezoned from the R-9 (UHO), Multi-Family Residential District with an Urban Landholding Overlay District to the R-11 (PUD), Multi-Family Residential District with a Planned Unit Development Overlay District and to create the specific PUD zoning regulations for this development.

Recommendation:

Village staff recommends that the Plan Commission send a favorable recommendation to the Village Board to approve the **Zoning Map and Zoning Text Amendments** subject to the comments and conditions of the May 23, 2016 Village Staff Report.

VILLAGE STAFF REPORT OF MAY 23, 2016

CONSIDERATION OF A ZONING TEXT AND ZONING MAP AMENDMENTS for the request of Jeffery Marlow, President of Lexington Homes Inc., for the proposed development of a 60-unit apartment building on the property located north of 97th Court and west of 94th Avenue in the Prairie Ridge Development to be known as Skyline Towers. Specifically the property is proposed to be rezoned from the R-9 (UHO), Multi-Family Residential District with an Urban Landholding Overlay District to the R-11 (PUD), Multi-Family Residential District with a Planned Unit Development Overlay District and to create the specific PUD zoning regulations for this development.

The petitioner is requesting approval of the Zoning Text and Zoning Map Amendments for the proposed Skyline Towers development. The 60-unit Skyline Towers apartment building will provide 60 underground parking spaces and 63 surface parking spaces on a 3.35 acre property located north of 97th Court and west of 94th Avenue in the Prairie Ridge Development. A Zoning Map Amendment to rezone the property from the R-9 (UHO), Multi-Family Residential District with an Urban Landholding Overlay District to the R-11 (PUD), Multi-Family Residential District with a Planned Unit Development Overlay District is being proposed. In addition, the Zoning Text Amendment to create the specific PUD zoning regulations for this development is being proposed. The PUD also includes the approval of the final PUD Development Plans and a Digital Security Imaging System (DSIS) Agreement and Access Easement.

Skyline Towers is proposed to be located at 9511 81st Street in the Prairie Ridge development will consist of 1-60 unit 3 story building. Parking will be accommodated primarily by underground parking with additional surface parking available. Storage lockers are available internally in the underground parking area as well as on each floor. All units will have individual high efficiency top load washers/front load dryers along with built in microwaves, smooth top ranges and fridges. The anticipated rents based on a thorough market study will range from the mid $700 up to in excess of $1,600. The residents will be responsible for their heat and water. The billing of the water will be accomplished by the building having one main water meter which will be billed to the property owner and paid. This water bill will then be split up and billed to the individual units by owner.

The 60-unit building will offer an array of floor plans ranging from an efficiency style to a luxurious 1,622 sq. ft. unit with 2 bedrooms and 2.5 baths. The building will breakdown as follows:

FIRST FLOOR

- 5- 2 bedroom with 2.5 baths--units range in size from 1,200-1,370 sq. ft.
- 5- 2 bedroom with 2 baths -- units range in size from 1,132-1,260 sq. ft.
- 1- Luxury 1 bedroom with 1.5 baths- unit is 1173 sq. ft.
- 8- 1 bedroom with 1 bath—units range in size from 820-980 sq. ft.
- 4- Efficiency with 1 bath – units are 617 sq. ft.

SECOND FLOOR

- 3- Luxury 2 bedroom with 2.5 baths—units range in size from 1,370-1,400 sq. ft.
- 3- 2 bedroom with 2.5 baths—units range in size from 1,200-1,218 sq. ft.
- 5- 2 bedroom with 2 baths—units range in size from 1,132-1,260 sq. ft.
- 2- 1 bedroom Loft with 1.5 baths—unit is 1,000 sq. ft.
- 6- 1 bedroom with 1.5 baths – units range in size from 820-980 sq. ft.
- 2- Lofts with 1.5 baths—units are 1,032 sq. ft.
- 2- Efficiency with 1 bath—units are 617 sq. ft.

THIRD FLOOR

- 6- 2 bedroom loft with 2.5 baths-units range in size from 1,503-1,622 sq. ft.
- 4- 1 bedroom loft with 2.5 baths—units range in size from 1,281-1,411 sq. ft.
- 1- 1 bedroom loft with 1.5 baths—unit is 1,401 sq. ft.
- 3- Lofts with 1.5 baths—units range in size from 900-903 sq. ft.

Population: Based upon the current projections of 2.34 persons per household (rental) in Pleasant Prairie, a maximum total of 140 persons are intended to live at this development. The Developer anticipates less than 10% of the occupants will be children or less than 5% being school age children.

Site Amenities: Skyline Towers will have access to an executive clubhouse which is located next door (northeast) at their current community Cobblestone Creek. "Club Cobblestone" will house the staff of the property management team from Lexington Management, which is the management arm of Lexington Homes, Inc. It is complete with security monitoring via cameras and access key system. (Cobblestone Creek is located direct east of this development.)

Site Access, Parking and Open Space: The three (3) story building is comparable and compatible with the surrounding three (3) story 3-story senior housing development on the north and the Cobblestone development to the northeast. The 3.35-acre property will retain 50% open space which greatly exceeds the minimum requirement of 25% of the site to remain in open space.

There are a total of 60 underground parking spaces with an additional 63 surface parking spaces for a total of 123 parking spaces. The development limits the number of cars per unit and is providing one (1) designated space per unit of underground parking. The PUD will provide for reducing the required enclosed parking of the required 67 to the 60 parking spaces as proposed. The overall number of parking spaces meets the total minimum requirements of the zoning ordinance as outlined below.

Pursuant to Section 420-50 of the Village Zoning Ordinance a minimum of 113 parking spaces (67 enclosed) are required for the apartments and an additional 9 are required for the clubhouse including handicapped accessible parking pursuant to the State requirements:

> 1 bedroom: (33 1 bedroom and efficiencies) 33 x 1.5 spaces=50 spaces (25 enclosed) + 5 guest parking spaces (1 space for each 8 unit) or 55 spaces.
>
> 2 bedrooms: (27 2 bedroom) 27 x 2 spaces=54 spaces (42 enclosed) + 4 guest parking spaces (1 space for each 8 unit) or 58 spaces.

The lighting of the parking areas will be done by a pole system with shoebox fixtures, along with building mounted dark sky compliant LED wall pack lights, and can lights at building entrances. Additionally, the apartment building entrances, parking lots and garage entrances will be monitored via a camera monitoring system pursuant to the Village's Security Ordinance.

The ***attached*** Digital Security Imaging System Agreement (DSIS) and Access Easement are required to be executed prior to issuance of permits and the system shall be installed and operational in accordance with the DSIS Agreement prior to occupancy of the building. The Access Easement document will be required to be recorded at the Kenosha County Register of Deeds also (recording fees to be paid by Developer).

The driveway access points to 81st Street (a private street) will align with the access to the Senior Housing Apartment on the north side of the road. The access to the underground parking is from 96th Avenue (a private street) on the west side of the development.

Construction Practices: Lexington Homes, Inc. prides itself on building communities in which are built of high quality and intricate conceptual design. Highlighted below is a list of some of their construction practices as outlined in their written narrative and included in the PUD Ordinance:

- The building will have an internal sprinkling system for fire safety.
- The external walls of the building will have 2 x 6 construction.
- High performance vinyl windows and patio doors with low E glass and argon gas will be installed.
- Partial stone façade blended with maintenance free products with aluminum frame and full glass front entry doors for security and aesthetics will be provided.
- Complete intercom system for entry.
- Custom plastered interior walls (this is not a drywall board system).
- Individual sound walls divide each unit.
- Sound insulation between the floors and RC-1 channel is added to the underside of the floor truss for additional reduction of sound transfer.
- ¾ inch gypcrete poured on 2nd and 3rd floors for another sound barrier and it also acts as another fire preventative.
- Deadbolt and peephole for individual unit entry doors.
- 30 year dimensional shingle roofs.
- All exterior site building and landscaping maintenance to be performed regularly by Lexington Management.

Postal service is proposed to be accommodated inside the building for convenience and also as another security measure. The Developer shall work with the Post Office directly to determine the location of the internal mailboxes.

Property Management/Maintenance: Pursuant to the approved Conceptual Plan written narrative, Lexington Management knows that the real success to any community lies within the long term management and maintenance of the site. Lexington operates under a very structured process and has included a copy of their management forms and provided further description information as noted below:

> **"Leasing:** Every potential resident that tours our site is required to fill out a "Welcome to the Community" form. This ensures the safety of their staff before each tour occurs. This form requires that they see a valid ID and gives them current living information. When the tour results in someone wanting to reside with them they are given a "Rental Process" form along with a "Standard Application for Occupancy". The rental process form clearly highlights what the qualifications are to reside at the property. The application is a more detailed document that allows them to further qualify every potential resident.
>
> With the receipt of the application, security deposit and signed rental process form they start the detailed approval process. This includes a credit check which requires a score of 600 or higher, the renter's gross monthly income shall be 2.5 times the amount of the monthly rent and a criminal background check is run. Lexington Management as a standard allows only 2 people per bedroom and 2 vehicles per unit. There are variables to this approval process which are also outlined on the rental process form.
>
> Residents are required to sign a <u>one year</u> lease with variable terms after that one year period depending on the individual situation. Is it management's goal to always try to secure one year leases continually with a built in parameter that does not allow anyone to move out November-February. They <u>do not allow dogs</u>. Cats are permitted with an extra deposit and extra monthly rent.

Management Structure: As one of the principal owners of Lexington Homes, Michelle Stimpson, has a focus on the day to day operations of the entire management division. Overseeing just under 1,700 units she believes in treating every resident as she would like to be treated. She physically reviews every resident file and signs every single lease that occurs within the entire company. With 20 years of experience in this industry and having both a real estate and broker's license, she knows that on the management side of things the difference is always the details. Weekly she meets with her district staff to review every property that they oversee. In these meetings site suggestions along with marketing and maintenance are discussed in great detail with implementation plans to be carried out and reported each week. Their district staff is required to be at each property working with the site management. Monthly reports are clearly documented (provided) to ensure the continued success of each site. Our management operates on the principal that this is "someone's home". They focus on the presentation not only to their prospective and current residents but to their guests as well. Additionally, they will have property staff which will include a Property Manager, Assistant Manager, Cleaning staff and Maintenance. Their goal is always to have as many of our staff physically living at the property so that someone is always available. At a minimum, one of the managers will live at the property.

They are very centered on routine inspections. Monthly they do property inspection reports along with exterior and interior building inspection reports. Yearly they inspect the interior of every single apartment and complete a full report as to the interior condition of that unit. At that time, an annual property review is also completed to help plan for upcoming projects."

Site Construction Schedule: Anticipated start date is June of 2016 with site grading and excavation work and completion to be April 1, 2017.

ZONING TEXT AND MAP AMENDMENTS: The Developer is requesting to rezone the property from the current R-11 (UHO) Multi-Family Residential District with an Urban Landholding Overly District to R-11 (PUD) Multi-Family Residential District with Planned Unit Development Overlay District. Developing the site as a PUD will allow for flexibility with some requirements of the Village Zoning Ordinance provided there is a defined benefit to the community.

The following modifications from the Zoning Ordinance are included in the ***attached*** PUD:

- To increase the net density from 9.6 dwelling units per acre to 21.2 dwelling units per acre.
- To increase the number of apartment units allowed per building from 24 to 60 units with a unit mix of 6-efficiency units, 27 1-bedroom units and 27 2-bedroom units.
- To allow the building height of the apartment building to increase from 35 feet to a maximum height of 51 feet.
- To allow for efficiency units to be reduced from a minimum of 700 square feet to 617 square feet.
- To reduce the reduce the required 40 foot setback to 35 foot setback to the property line adjacent to 94th Avenue (consistent with the apartment building to the north).
- To allow for a reduction of the required enclosed parking from 67 to 60 spaces (one for each unit).

In consideration of these modifications to the Village Zoning Ordinance, the following is required and included in the PUD Ordinance:

- A minimum one (1) parking space per unit shall be provided in an enclosed garage attached to the building.

- Three (3) bedroom units are prohibited.
- To provide additional secured storage spaces for each unit in the underground parking area and on the floors of the units (approximately 20 sq. ft. per unit is proposed).
- The exterior building materials and design of the apartment building shall be a combination of stone and cement board with a 30 year architectural shingle.
- An increase from 25% to a minimum of 50% of the site shall remain in open space.
- The apartment building will be fully sprinklered in accordance with Chapter 180 of the Village Municipal Code.
- Landscaping and exterior turf shall be sprinklered.
- The height of the Multifamily Residential Development Identification Sign to be a maximum height of six (6) feet rather than eight (8) feet.
- The Developer shall install an on-site security system and enter into a Digital Security Imaging System (DSIS) Agreement and provide the Village with the required Access Easement which meets the Village Security Ordinance requirements (see ***attached*** agreement and easement).
- As required by the Developer and supported by the Village, no dogs are allowed within the development.
- Additional landscaping will be required.

Village staff recommends approval of the Zoning Map and Text Amendments including the Final Development Plans the DSIS Agreement and DSIS Access Easement subject to the above comments and the following conditions:

1. ***Attached*** is the PUD ordinance for the Development. The following Exhibits are required to be finalized and approved prior to the ordinance being effective:

    a. Exhibit 1 is the Site and Civil Plans (including grading and erosion control plan, detailed grading plan, storm sewer plan, sanitary and water plan, site construction details, landscape plan and details, light plans and details.

    b. Exhibit 2 is the Architectural Building Plans.

    c. Exhibit 3 is list of exterior building materials and colors.

2. The PUD Development Plans have been reviewed for conformance with generally accepted engineering practices and Village Ordinances and policies. Although the data has been reviewed, the design engineer is responsible for the thoroughness and accuracy of plans and supplemental data and for their compliance with all state and local codes, ordinances, and procedures. Modifications to the plans, etc. may be required should errors or changed conditions be found at a future date and detailed engineering plans are prepared and reviewed. **The following information shall be submitted and noted changes shall be made to the plans. Three (3) full size sets of plans and a pdf copy of all plan sheets shall be submitted for review by the Village with a memo explaining how and where each comment was addressed.**

    a. The ***attached*** listing of government/agency contacts shall be added to the cover sheet.

    b. Provide revised landscaping plans:

        i. In consideration of the PUD one of the community benefit items is increased sizes and numbers of landscaping on the site-additional landscaping, bushes and other plant-life on the berms adjacent to 94th Avenue.

ii. Provide the detailed planting specifications which details of the landscaping sizes at planting (no 1 gallon sizes) and mature sizes and mulch/staking and planting beds.

iii. No stone islands shall be provided.

c. Provide written approval from the Prairie Ridge Commercial Owners Association will be required to for the development project and specifically to allow the parking lots within the 25 Foot Landscape and Planting Easements that surround the property.

d. Provide written approval from the utility easement holders to install said improvements, including landscaping and berms, driveways and parking lots that encroach into. These written approvals shall be submitted to the Village prior to issuance of any permits.

e. Compliance with the ***attached*** comments from the Village Fire & Rescue Department dated April 6, 2016.

f. Provide the required Fire Compliance Letter indicating the project will comply with all requirements addressed within the April 6, 2016 Fire & Rescue memorandum. A copy of this letter shall also be provided to the Community Development Department.

g. The ***attached*** draft Digital Security Imaging System (DSIS) Agreement and Easement shall be finalized (after staff received the following information), executed prior to issuance of permits. Provide the following as Exhibits to the DSIS Agreement:

i. Detailed executed DSIS contract documents.

ii. Detailed DSIS camera, DVR and other specifications.

iii. The DSIS Access Easement shall be executed and recorded at the Register of Deeds Office prior to issuance of building permit. ($40 recording fee).

h. Provide Airport Overlay Site Plan approval from the City of Kenosha. Contact City Planning 262-653-4030.

i. Compliance with ***attached*** comments from the Village Public Works Department dated April 5, 2016.

j. Clarify and provide details of the noted pumper pad location. Show the configuration, Fire Department Connection, FDC hydrant, etc. Is the proposed removal of concrete curb and replacement with mountable curb on 81st Street part of this configuration? Further information is required for review.

k. Dimension the building setbacks from the right-of-way for the three building corners that are not dimensioned on the site plan.

l. All curb and gutter removals / replacement sections shall be to the nearest joint and shall meet the requirements of the Village standard construction specifications. Curb and gutter constructed adjacent to existing curb and gutter shall be installed using (2) No.4 (1/2-inch), 18-inch long tie bars, evenly spaced, driven 9-inches into the existing curb and gutter. Note requirements on the plan.

m. Sidewalk removals or replacement sections due to driveways, utility connections, or damage shall be to the nearest joint and shall be replaced in-kind. Note on plans.

n. Are there cleanouts being provided along the storm sewer roof drain collection system? Note / show on plans.

o. A sampling manhole is required for the project. The sampling manhole shall be located to allow easy access for utility crews and shall be within pavement areas but not located in parking stalls. No alignment changes are allowed at a sampling manhole. Plans shall be revised as needed.

p. Proposed topographic contours and pavement grades shall be provided. We are unable to review the grading plan, since they are missing. Also show existing utilities on the grading plan.

q. Provide proposed pavement sections. Also, provide pavement marking legend with marking width and color information.

r. Provide details for (applicable Village Standard Details are ***attached***):

   i. Driveway entrance(s).

   ii. All Curb and gutter sections used.

   iii. Standard Village Sanitary Manhole

   iv. Standard Village Sampling Manhole and Flume Details.

   v. Standard Village Fire Hydrant Assembly Detail – If a hydrant is part of the overall design.

   vi. Storm sewer manhole and inlet details.

   vii. Sidewalk detail.

   viii. Trench drain detail.

   ix. Other relevant civil site details which may not be listed.

s. Provide proposed topographic contours and utilities on the landscaping plan.

t. Provide storm sewer sizing calculations.

u. Provide an engineer's estimate of the amount of import or export of fill required for the project.

v. Provide a written response as to how the site security is being provided and how the security is being addressed in the front entry.

w. Note: Construction fencing (6' chain link fencing) shall be installed around the perimeter of the site and remain in place while the site is under construction.

x. Label the location of the Multi-Family Residential Development Identification Sign on the plans. If a sign detail in available shown on the plans. The following is the minimum requirements for this sign.

   i. Maximum number: one sign per development.

   ii. Minimum setback: five (5) feet from any property line or the back of curb of a private street.

   iii. Maximum height: six (6) feet per Prairie Ridge Commercial Covenants.

   iv. Maximum area: 36 square feet per face.

v. Landscaping shall extend a minimum of three feet in every direction from the base or other support structure of the sign, except if the sign is located in a boulevard island, then the landscaping shall not extend closer than two feet from the back of the curb of the boulevard island. This needs to be confirmed on landscaping plans

vi. May be illuminated.

vii. May be placed on two supports or may be placed on a solid-appearing decorative base which supports a minimum of 75% of the display of the sign.

viii. The sign supports or base shall be constructed of materials that complement the materials used in the development.

ix. Maximum height of base under display: two (2) feet per Prairie Ridge Commercial Covenants.

x. All other informational signs proposed on site shall meet the requirements of Article X of Chapter 420 of the Village Code.

3. Compliance with the ***attached*** comments from the Building Inspection Department dated May 19, 2016.

4. **Upon approval Zoning Text and Map Amendments by the Village Board (to be considered at their June 6, 2016) and the revised Development Plans. The following <u>is required to be submitted/completed prior to issuance of the required permits to commence construction:</u>**

a. <u>Provide the required DNR Notice of Intent Permit</u> shall be submitted with the required Erosion Control Permit application and plans (2 paper copies and a pdf).

b. The required Village Building Permit application and required drawings (2 paper copies and a pdf) shall be submitted.

c. **Prior to commencement of construction, the Developer's engineer shall conduct a pre-construction meeting at a Village office with all of the contractors, utilities, Village on-site inspectors and Developer representatives.** (Tentatively scheduled for June 6, 10:00 a.m. at the Village Hall). Developer shall contact and coordinate attendance of owner, engineer, and contractors.

i. The Developer's engineer shall coordinate the set-up of this meeting with the Community Development Department when the building permits are submitted.

ii. The Developer's engineer shall run the pre-construction meeting.

iii. The Developer's engineer shall come prepared with extra copies of the plans and specifications, copies of the agenda for the meeting, copies of the construction schedule and copies of the listing of emergency contact personnel and phone numbers. (The Village can provide a sample agenda).

iv. After the pre-construction meeting the contractor can pick-up the permits for work to commence on the project.

v. Within 7 days of the pre-construction meeting the Developer's engineer shall provide detailed minutes of the meeting.

d. Impact fees pursuant to Chapter 181 of the Village Code are required to be paid at time of building permit.

e. Understand and agree that after footings and foundations are installed and prior to framing or construction of walls, an as-built survey stamped by a Wisconsin Registered Land Surveyor shall be submitted to the Village to verify that required building setbacks have been met.

f. Understand and agree that a sign permit is required to be issued prior to the installation of the Multifamily Residential Development Identification Sign or any other on-site signage on the site. Prior to the issuance of any sign permits, written approval from the Prairie Ridge Commercial Owners Association shall be submitted to the Village.

g. A fence permit is required for the temporary construction fencing which shall be installed around the perimeter of the site.

5. **Other Conditions <u>prior to Verbal Occupancy</u>**:

a. Postal service is accommodated inside the building for convenience and also as another security measure—the location of the mailboxes shall be discussed directly with the Post Office. If the mail boxes must be placed outside, the structure, materials and location must also be acceptable to the Village.

b. All downspouts shall be interconnected to the private storm sewer system. The downspouts shall be wrapped in the same material and color as the downspouts no silver or plastic PVC shall be visible above grade.

c. The parking lot areas, sidewalks and all impervious surfaces shall be swept and cleaned from all mud and debris.

d. All garbage and debris shall be picked up or cleaned up from the site.

e. All construction related dumpsters, trailers and building equipment shall be removed from the site.

f. Any damage to the public infrastructure during construction of the development shall be repaired by the developer to the Village's satisfaction.

g. All required landscaping and screening for the building and signage shall be installed prior to occupancy of the building. A written letter verification and certification shall be provided to the Village by the landscape designer that all building and signage landscaping has been installed in accordance with the approved landscape plan prior to the issuance of a certificate of compliance/occupancy. However, if weather conditions prevent installation of all or portions of the landscape materials, the developer shall enter into a written agreement with the Village that specifies the date by which all approved landscaping shall be completed and grants the Village a temporary easement to complete the landscaping if not timely completed and shall deposit with the Village Clerk a cash deposit, an irrevocable letter of credit, or other financial assurance approved by the Zoning Administrator to ensure timely completion of all required landscaping; the amount of the financial assurance shall be equal to 110% of the contracted amount to complete the landscaping improvements in order to reasonably compensate the Village for the cost of completion of any landscaping improvements not completed within the specified time. <u>Prior to building occupancy, written certification from the landscaping installation company shall be provided that the landscaping was installed pursuant to the approved final landscaping plans.</u>

h. The monument and site signage shall be inspected and approved. Written certification from the signage installation company shall be provided that the signage was installed pursuant to the approved final signage plans.

i. Three (3) copies and a pdf of an as-built plan stamped by a Wisconsin Registered Land Surveyor shall be submitted to the Village to verify that the required building, above ground structures and all impervious surfaces meet the minimum setbacks and that all pavement markings were marked per the approve site plans and the grading of the site was completed pursuant to the approved plans.

j. An as-built record drawing of graphical data of all private sewer, water, and storm sewer facilities and underground irrigation system installed shall be provided to the Village for the Village to update the Village's Geographic Informational System. Information shall conform to the Village's electronic format requirements. In addition, a paper copy prepared and stamped by the Engineer of Record for the project shall be submitted.

k. The address on the building shall be placed on the front of the building above the door in attractive brass or black metal address numbering (not sticker numerals).

l. The exterior man doors shall be numbered consecutively inside and outside starting with one at the front door and moving clockwise around the building. The numbers shall be tasteful in appearance and consistent with other font as the address. The numbers shall be 3" in size and conspicuously located in the same place on adjacent to the door. (Work with Jean Werbie-Harris).

m. The DSIS system shall be fully inspected and operational. Adequate outdoor lighting must be maintained on the property for the DSIS camera system to operate effectively.

n. This development shall be in compliance with the Village Land Division and Development Control Ordinance, the Village Municipal and Zoning Codes, the Village Construction Site Maintenance and Erosion Control Ordinance and the Wisconsin Statutes.

o. All Village fees and billing incurred by the Village Community Development and the Engineering Department and/or expert assistance required by the Village throughout the development process shall be paid by the Developer. Outstanding invoices processed after occupancy shall be paid in a timely manner.

p. Compliance is required with all Building Inspection and Fire & Rescue comments, conditions and punch lists.

Draft 5 19 16

AGREEMENT REGARDING DIGITAL SECURITY IMAGING SYSTEM ("DSIS")
BETWEEN THE VILLAGE OF PLEASANT PRAIRIE
AND SKYLINE TOWERS LLC

THIS AGREEMENT regarding the Digital Security Imaging System (DSIS) (hereinafter referred to as the "Agreement"), is entered into this ___ **day of _____, 2016**, by and between the VILLAGE OF PLEASANT PRAIRIE, WISCONSIN, a Wisconsin municipal corporation with offices located at 9915 39th Avenue, Pleasant Prairie, Wisconsin 53158 (referred to as the "Village") and Skyline Towers LLC, a Wisconsin Limited Liability Company with a business address of 1300 North Kimps Court, Green Bay, WI 54313 (920-662-1630) (referred to as "Skyline Towers Apartments"). In this Agreement, Skyline Towers is also referred to as the "Owner".

WITNESSETH:

WHEREAS, the Owner of the real estate commonly known as Lot 3 of Certified Survey Map No. 2458, also referred to as a part of the Re-Division of Outlot 9 of the Prairie Ridge Subdivision Plat # 5745, **(Exhibit A - CSM)** recorded in the Office of the Register of Deeds for Kenosha County, Wisconsin as Document No. 1420259, being a part of the Southeast One-Quarter of the Northeast One-Quarter of the Northwest One-Quarter and the Northwest One-Quarter of U.S. Public Land Survey Section 8, Township 1 North, Range 22 East of the Fourth Principal Meridian, in the Village of Pleasant Prairie, Kenosha County, Wisconsin and having Village Tax Parcel Number 91-4-122-084-0413 known as the "Owner's Property" in this Agreement; and

WHEREAS, The Owner desires to proceed with the development of the Skyline Towers Apartments (referred to as "Skyline") on the Owner's Property with a building to be located at 9511 81st Street in the Village; and

WHEREAS, the Skyline development consists of one 3-story, 60-unit apartment building providing a variety of efficiency, 1-bedroom, 2-bedroom and loft style apartments ranging in size from 617 to 1,622 square feet in size on a 3.35-acre development site **(Exhibit B – Site Plan)**; and

WHEREAS, The Owner's Property is presently zoned R-11, Multi-Family Residential with a Planned Unit Development Overlay District (PUD), which zoning classification allows the development of multi-family residential housing with underground and surface parking in accordance with **Village Zoning PUD Ordinance #16-__ (Exhibit C - PUD).** The PUD was adopted by the Village Board of Trustees (the "Village Board") on June 6, 2016; and

WHEREAS, the Village Plan Commission conditionally approved the revised **Final Development Plans** for the Skyline development on _____ __, 2016 subject to a number of conditions, one of which was the execution of this Agreement and the installation and operation of a DSIS for the Property. Said Plans are on file in the Village's Community Development Department; and

WHEREAS, the Village has asserted and the Owner agrees that the development of the Skyline development will require additional security provisions pursuant to Village regulations in order to maintain a safer environment for their residents and for the protection of their personal property; and

WHEREAS, the Owner further agrees to be in compliance with Village Municipal Code Chapter 410 entitled, "Security Ordinance" through the implementation and use of a DSIS which is described in **Exhibit D – DSIS Plan** attached hereto, that monitors the exterior public access areas, underground parking and driveways of the Owner's Property located in the Village; and

WHEREAS, the DSIS will afford the opportunity for the public safety departments (e.g. the Village Police Department and Village Fire & Rescue Department) to visually examine retail sales and service development sites such as the Skyline development in the Village and will provide emergency response personnel with a live visual assessment of any emergency situation in advance of arrival without placing an undue burden on the Village taxpayers; and

WHEREAS, the implementation and usage of the DSIS will greatly aid law enforcement agencies in subsequent criminal investigations and prosecutions because of the advanced visual assessment of the Property as it may pertain to a person or persons (personal identification), a location (scene identification) and/or a situation (action identification) in emergency situations; and

WHEREAS, Section 410-7 of the referenced Security Ordinance Chapter of the General Code of the Village provides the authority to the Community Development Department to have the discretion, on a case by case basis, to determine the adequacy, ownership and easement requirements of the DSIS; and

WHEREAS, the Owner and the Village Community Development Department have reached an agreement under Section 410-7 that the Owner shall install, inspect and maintain the DSIS per the Village's Security Ordinance requirements, except as may be modified by this Agreement. Further, the Owner shall grant a property Access Easement **(Exhibit E - Easement)** to the Village allowing access and maintenance rights to the

DSIS system and areas associated with the DSIS insofar as the Village has the right, but not the obligation, to maintain the DSIS system at the Owner's cost, if the Owner fails to do so; and

WHEREAS, the Owner recognizes that the Village may incur some inspection or maintenance costs with respect to the inspection or maintenance of the DSIS system on the Owner's Property and said costs shall be invoiced to the Owner and the Owner has agreed to reimburse the Village for certain referenced costs related to the DSIS program.

NOW, THEREFORE, in consideration of the promises and covenants contained herein, the sufficiency of which is hereby acknowledged, the Owner and the Village agree as follows:

1. Video Surveillance and Easement Requirements. As a pre-condition to the Village granting any verbal or written building occupancy permits or approvals required by the Owner for the Skyline development to be occupied, the Owner shall install, make operable and usable to the satisfaction of the Village, the on-site DSIS for security surveillance purposes. The DSIS shall be the system described in **Exhibit D** which was created pursuant to the proposal prepared by Dakota Security Systems, Inc. with offices located at 414 S. Vermont Street, Palatine, IL 60067 (877-804-8622), for the Owner, with the plans and video surveillance hardware specifications dated **_____ __,** 2016, which is incorporated herein by reference. The Owner will hire a qualified contractor who shall install the DSIS. During the installation of the DSIS as provided herein, the Village shall have the right to inspect the DSIS at the Owner's expense. After the installation, Village inspection and system testing is complete, and if it meets with the approval of the Village, the Village shall notify the Owner of the Village's acceptance of the DSIS. The Owner agrees to sign and deliver to the Village copies of any and all documents (e.g. DSIS installation and warranty information, copies of paid invoices for the work performed, copies of contractor lien waivers and an as-built drawing of the DSIS) that are reasonably requested by the Village to confirm such installation and operation of the DSIS to the Village. The DSIS shall be installed with at least a one (1) year warranty from the manufacturer and installer. The Owner shall be solely responsible for the costs for the purchase and installation and the subsequent ongoing maintenance of the DSIS.

In the event that the Owner alters the building, adds on to the building or otherwise changes or increases the development on their Property, such Owner shall be responsible for installing, at the Owner's sole expense, such additional cameras and other exterior DSIS as the Village determines are necessary and appropriate to carry out the purposes of this Agreement. The initial DSIS system installed in accordance with **Exhibit D** and any future additions to such system as exterior building alterations or changes within the development or new or additional development takes place on the

Owners' Property, shall all be referred to as the "DSIS" for purposes of this Agreement.

a. Digital Security Imaging, Storage Devices, Related Equipment and Easements Required.

(i) The DSIS shall provide for surveillance of the exterior building entrances, underground parking entrances, and parking lot entrances within the development. The DSIS as described in **Exhibit D** shall adequately cover the Owner's Property as the Village deems reasonably necessary. If any changes or expansions are made to any portion of the Owner's Property, the determination as to the number and type of cameras which are reasonably necessary for the Village's surveillance needs shall rest within the reasonable discretion of the Village. All parties acknowledge it is the intent of the parties that the DSIS camera equipment will be located on the buildings of the Owner's Property and attached via non-penetrating mounts as shown on **Exhibit D**. Skyline Towers LLC will utilize its best efforts to ensure that the DSIS is as aesthetically tasteful and architecturally harmonious as reasonably possible. Without limiting the discretion of the Village under this Paragraph, the parties agree that any cameras and systems which are consistent with those contained in **EXHIBIT D** are aesthetically tasteful, architecturally harmonious and satisfactory to all parties.

(ii) The DSIS will function as set forth in **Exhibit D** and as deemed necessary by the Village, which shall function continuously, whether the business is open or closed and shall provide visible surveillance to the above described areas during hours of daylight and darkness. As such, sufficient light, as determined by the Village, shall be provided during the evening or night-time hours to guarantee the function, operation and clear viewing by the camera system.

(iii) The Owner agrees to provide the DSIS in a secured location within the Skyline development on the Owner's Property that will be accessible for inspection and electronically accessed via a VPN internet connection with the assistance of the Owner. The Owner shall provide access as provided herein upon reasonable verbal or written advance notice to Owner. Notice given twenty-four (24) or more hours in advance shall conclusively be deemed reasonable and notice given less than twenty-four (24) hours in advance may also be reasonable depending upon the circumstances.

(iv) The Owner agrees to be responsible for all financial costs associated with the monthly billings for the utilities, electricity and high speed internet business connection for the DSIS equipment by making payments directly to the utility and communication companies. The Owner shall also be responsible for the heat, electricity and routine maintenance of the secured security area in the room which houses the DSIS equipment.

The internet connection must remain operational for the life of the DSIS at the cost of the property owner/developer.

(v) All digital video recorded by such system shall be archived in the secured area for a period of not less than four (4) weeks and shall be available to the Village for public safety purposes directly through a static Internet Protocol (IP) transmission via the Village's area-wide data network. The connection must possess upload speeds of no less than 5 mbps and download speeds of no less than 5 mbps (business class connection). The DSIS shall also provide a "real time", "live look" surveillance capability via that same network. The Village Police Department shall have log-in capabilities to the DSIS "live-look" system on the Property independent of the Owner's personnel. Proper software security keys and logins will be provided to the Village Police and IT Departments to provide immediate access to both "real time" access as well as historical video as required.

(vi) The Owner shall grant a permanent Access Easement to the Village allowing access and maintenance rights, if the Owner fails to maintain the DSIS, to all such systems, equipment, devices and areas associated with the DSIS. The Village shall have the right, but not the obligation, to maintain the DSIS system at the financial cost of the Owner. All expenses incurred by the Village for the maintenance of the DSIS shall be paid to the Village by the Owner within ten (10) business days following written demand by the Village. At the time of the execution of this Agreement by the Owner, the Owner shall also execute the recordable Access Easement document attached hereto as **Exhibit E** and incorporated herein by reference.

b. <u>Costs for the Video Surveillance System.</u>

(i) The Owner shall have exclusive ownership and sole responsibility for the installation, operation, monitoring and maintenance of the DSIS. The Owner further covenants to operate and maintain the DSIS in good condition and repair. The Owner shall be responsible for the: (a) costs of installation, (b) internet connection for the DSIS with a static IP address assigned to the DSIS connection and (c) inspection, equipment maintenance, repairs, insurance, and replacement and upgrading of the DSIS as necessary with such upgrading as needed being only for a reasonably comparable replacement of any equipment then being used in the DSIS.

(ii) As referenced above, the Owner has agreed to provide utilities to serve both the DSIS equipment and the secured area housing the DSIS. The Owner, at its sole cost and expense, shall also provide a conduit running to the security cameras as described in **Exhibit D** for low voltage as well as a separate conduit running to the cameras for high voltage. The Owner shall provide a business broadband internet connection to serve the DSIS. This broadband internet connection shall represent a clear, non-pixilated video image transmission to the Village Police Department and shall be reasonably acceptable to the Village IT Department.

c. Termination. The Owner may not terminate the DSIS at any time without prior written approval and notice from the Village. The Owner shall notify the Village Police Department Dispatch Center via the telephone and by U.S. mail to the persons as noted below whenever the DSIS is inoperable or the DSIS is unusable due to maintenance or testing. Further, if the DSIS is deemed by the Village as being inoperable or unusable for a time period in excess of 30 days without notification to the Village, the Owner shall be deemed to be in violation of Section 410 of the Village Code.

2. Miscellaneous.

a. Governing Law; Venue. This Agreement shall be governed by and construed in accordance with the laws of the State of Wisconsin. The parties agree that any dispute under this Agreement shall be venued only in the Circuit Court for Kenosha County.

b. Attorneys Fees and Interest. If either party defaults in the performance or observation of any of the terms, conditions, covenants or obligations contained in this Agreement and the complaining party places the enforcement of all or any part of this Agreement in the hands of an attorney, of if that party incurs any fees or out-of-pocket costs in any litigation, negotiation or transaction, the party that substantially prevails in any such dispute shall be reimbursed for its actual attorneys' fees and costs incurred thereby, whether or not litigation is actually commenced. Any sums not paid when due, including without limitation any maintenance fee, shall, in addition to all other amounts owed under this Agreement or applicable law, accrue interest from the due date until paid at eighteen percent (18%) per annum.

c. Entire Agreement. This Agreement contains the entire understanding among the parties and supersedes any prior understanding and agreements between them respecting the within subject matter. There are no representations, agreements, arrangements or understandings, oral or written, between or among the parties hereto relating to the subject matter of this Agreement which are not fully expressed herein.

d. Severability. This Agreement is intended to be performed in accordance with, and only to the extent permitted by, all applicable laws, ordinances, rules and regulations. If any provision of this Agreement, or the application thereof to any party or circumstance, shall, for any reason and to any extent, be invalid or unenforceable, the remainder of this Agreement and the application of such provision to the other party or circumstances shall not be affected thereby, but rather shall be enforced to the greatest extent permitted by law.

e. Binding Agreement. This Agreement shall be binding on the parties and their successors and assigns and shall continue as a covenant and servitude running in perpetuity with the Owner's Property. This

Agreement may be recorded with the Kenosha County Register of Deed's Office against the Owner's Property.

f. Notices. Any notice which a party is required or may desire to give the other party shall be in writing and may be delivered (1) personally by United States registered or certified mail, postage prepaid, or (2) by Federal Express or other reputable courier service regularly providing evidence of delivery (with charges paid by the party sending the notice). Any such notice shall be addressed as follows (subject to the right of a party to designate a different address for itself by notice similarly given):

If to the Owner:

Skyline Towers LLC
Attn: Jeffrey T. Marlow, Managing Member
1300 North Kimps Court
Green Bay, WI 54313

If to the Village:

Village of Pleasant Prairie
9915 39th Avenue
Pleasant Prairie, WI 53158
Attn: Michael R. Pollocoff, Village Administrator

And to the Village:

Village of Pleasant Prairie
Community Development Department
9915 39th Avenue
Pleasant Prairie, WI 53158
Attn: Jean M. Werbie-Harris,
Community Development Director

And to the Village:

Village of Pleasant Prairie
Police Department
8600 Green Bay Road
Pleasant Prairie, WI 53158
Attn: Police Chief David Smetana

g. Amendment. This Agreement may not be amended, altered or modified except by an instrument in writing and signed by the parties hereto.

h. Ordinance. The DSIS program under this Agreement shall be deemed to be sufficient to meet the current requirements set forth in Chapter 410 of the Village Municipal Code.

i. Village's Contractors and Work. Any contractor that may come onto any Owner's Property on behalf of the Village shall carry a non-deductible (a) commercial general liability insurance policy, including (but not limited to) contractor's liability coverage, contractual liability coverage, completed operations coverage, broad form property damage endorsement and contractor's protective liability coverage, to afford protection, with respect to personal injury, death or property damage of not less than One Million Dollars ($1,000,000) per occurrence combined single limit/One Million Dollars ($1,000,000) general aggregate (but not less than $500,000 per location aggregate); (b) comprehensive automobile liability insurance policy with a combined single limit for each occurrence of not less than Three Hundred Thousand Dollars ($300,000) with respect to personal injury or death and property damage; and (c) worker's compensation insurance policy or similar insurance in form and amounts required by law. The Village shall carry similar amounts and types of insurance when it enters onto any Owner's Property, provided, such insurance may be provided through the municipal insurance plan of the Village.

j. Liens. Notwithstanding the provisions of this Agreement, the Owner shall pay promptly all persons furnishing labor or materials with respect to any work performed by the Owner or its contractors on or about any Owner's Property. If any mechanic's or other liens shall at any time be filed against any Owner's Property by reason of work, labor, services or materials performed or furnished, or alleged to have been performed or furnished, the Owner shall forthwith cause the same to be discharged of record or bonded.

k. Signing of Documents. Each party shall sign and deliver any documents which this Agreement requires such party to sign, no later than ten (10) days following written request by another party.

IN WITNESS WHEREOF, SKYLINE TOWERS LLC has executed this DSIS Agreement on this __ **day of _____, 2016**.

Notarized signatures are on the next two pages.

SKYLINE TOWERS LLC

By:_____
Name: Jeffrey T. Marlow
Title: Managing Member

STATE OF _____)
) SS
COUNTY OF _____)

This instrument was acknowledged before me in _____, WI on _____ ___, 2016, by Jeffrey T. Marlow, as the duly authorized Managing Member of Skyline Towers, a Wisconsin limited liability company.

_____
Signature of Notary Public

_____
Typed or Printed Name of Notary Public

Notary Public, Kenosha County, State of Wisconsin
My Commission expires: _____
(is permanent)

VILLAGE OF PLEASANT PRAIRIE, WISCONSIN:

By:_____
Name: John P. Steinbrink
Title: Village President

ATTEST:

_____
Name: Jane M. Romanowski
Title: Village Clerk

STATE OF WISCONSIN)
) SS:
KENOSHA COUNTY)

This Agreement was acknowledged before me in Pleasant Prairie, WI on _____ ___, 2016 by John P. Steinbrink and Jane M. Romanowski as the duly authorized Village President and Village Clerk, respectfully, of the Village of Pleasant Prairie, a Wisconsin municipal corporation.

_____
Signature of Notary Public

_____
Typed or Printed Name of Notary Public

Notary Public, Kenosha County, State of Wisconsin
My Commission expires: _____
(is permanent)

This document drafted by:
Jean Werbie-Harris
Community Development Director
Village of Pleasant Prairie
9915 39th Avenue
Pleasant Prairie, WI 53158

EXHIBIT A

TO AGREEMENT REGARDING DSIS SECURITY SYSTEM

COPY OF CERTIFIED SURVEY MAP NO. 2458 WITH LEGAL DECRIPTION OF LANDOWNER'S PROPERTY

[CSM attached hereto]

LOT 3 OF CERTIFIED SURVEY MAP #2458 RECORDED AS DOCUMENT #1420259 A REDIVISION OF OUTLOT 9 OF THE PRAIRIE RIDGE SUBDIVISION PLAT #5745 AT THE KENOSHA COUNTY REGISTER OF DEEDS OFFICE AND FURTHER IDENTIFIED AS PART OF THE SOUTHEAST ONE-QUARTER, NORTHEAST ONE-QUARTER, NORTHWEST ONE-QUARTER AND NORTHWEST ONE-QUARTER OF U.S. PUBLIC LAND SURVEY SECTION 8, TOWNSHIP 1 NORTH, RANGE 22 EAST OF THE FOURTH PRINCIPAL MERIDIAN IN THE VILLAGE OF PLEASANT PRAIRIE, KENOSHA COUNTY, WI. THE SITE CONTAINS APPROXIMATELY 3.35 ACRES MORE OR LESS.

EXHIBIT B

TO AGREEMENT REGARDING DSIS SECURITY SYSTEM

SKYLINE TOWERS APARTMENT SITE PLAN

(Attached hereto)

EXHIBIT C

TO AGREEMENT REGARDING DSIS SECURITY SYSTEM

VILLAGE PLANNED UNIT DEVELOPMENT (PUD) ORDINANCE #16-__

(Attached hereto)

EXHIBIT D

TO AGREEMENT REGARDING DSIS SECURITY SYSTEM

DSIS PLAN, HARDWARE DETAILS AND NARRATIVE

[Attached hereto]

EXHIBIT E

TO AGREEMENT REGARDING DSIS SECURITY SYSTEM

SITE ACCESS EASEMENT

[Attached hereto]

Draft 5 19 16

ACCESS EASEMENT

This ACCESS EASEMENT is entered into this _____ day of _____, 2016 by and between the Grantor, SKYLINE TOWERS LLC, a Wisconsin Limited Liability Company (the "Landowner") and the Grantee, the VILLAGE OF PLEASANT PRAIRIE, A Wisconsin municipal corporation (the "Easement Holder").

RECITALS

A. The Landowner is the owner of certain real estate in the Village of Pleasant Prairie, Kenosha County, Wisconsin, which is legally described in **Exhibit A** and incorporated herein by reference (collectively the "Landowner's Property").

B. The Easement Holder has entered into a Security Agreement with the Landowner for the right but not the obligation for the installation and maintenance of an exterior Digital Security Imaging System ("DSIS") upon Landowner's Property for security surveillance purposes (the "Agreement").

C. In connection with the above-referenced Agreement, the Landowner has agreed to convey to the Easement Holder access and maintenance rights to all such systems, devices and areas associated with the DSIS.

Recording Area

Name and Return Address:
Jean M. Werbie-Harris
Community Development Dept.
Village Municipal Building
9915 39th Avenue
Pleasant Prairie, WI 53158

Parcel Identification Number:

91-4-122-084-0413

D. The Easement Holder acknowledges and agrees that the Landowner will utilize the Landowner's Property for the Skyline Towers apartment development which will consists of one 3-story, 60-unit apartment building providing a variety of efficiency, 1-bedroom, 2-bedroom and loft style apartments ranging in size from 617 to 1,622 square feet in size on a 3.35-acre development site in the Prairie Ridge Development, commonly known as Skyline Towers ("Skyline"), and the Easement Holder shall not unreasonably interfere with said use and operation of the Landowner's Property by the Landowner.

GRANT OF ACCESS EASEMENT

In consideration of the facts recited above, the Landowner and Easement Holder agree as follows:

1. Grant of Easement. The Landowner hereby grants and conveys to the Easement Holder, its contractors and agents, a perpetual, non-exclusive, rent-free, access and maintenance easement (the "Access Easement") over and through the exterior of the improvements located on that portion of the Landowner's Property required for the installation, maintenance and use of said DSIS, related electrical work and internet access, and if applicable to a secured area within the Skyline apartment building generally located as described in the DSIS Security Agreement, which location may be relocated by mutual agreement of the parties (the "Easement Property"). All utility lines shall be underground to the extent possible. The Landowner shall supply electricity and internet connection services for the DSIS as provided in the Agreement.

2. Use of Access Easement. The purpose of the Access Easement is to provide for the installation, operation and maintenance of a DSIS in accordance with a Security Agreement between the parties and other property owners dated on or about _____ ____, 2016 (the "Agreement"), the terms and conditions of which are hereby incorporated in this Access Easement. Nothing in this Access Easement is intended to prohibit use of the Access Easement area by the Landowner, provided such use does not materially interfere with the use of the Access Easement by the Easement Holder. The Easement Holder agrees that it will not materially interfere with the normal operation and use of the Landowner's Property by the Landowner and its residents/occupants, and that its equipment shall not impair the architectural and landscaping designs of the development.

3. Improvements. The Easement Holder shall have the right, but not the obligation, to construct and install reasonable improvements upon the Easement Property in accordance with the terms in the Agreement, to make the Easement Property suitable for the installation of a DSIS with as little damage to the Landowner's Property as possible. Subject to the terms of the Agreement, if the Easement Holder undertakes the installation or maintenance of the DSIS, the Easement Holder agrees to use its best efforts to make the DSIS as aesthetically tasteful and architecturally harmonious as reasonably possible while still allowing the DSIS to cover as much of the Skyline development as the Easement Holder deems reasonably necessary.

4. Maintenance. The Easement Holder shall have access at all times as it deems necessary for maintaining its DSIS and related equipment on the Easement Property to the extent necessary for the uses described in the Agreement. The Landowner shall pay the Easement Holder a maintenance fee and other fees as described in the Agreement if the Easement Holder undertakes inspections or takes over the responsibilities of the DSIS maintenance.

5. Damage to Easement Property. The Easement Holder shall be responsible for any damage that it may cause to the Easement Property. The Easement Holder shall promptly make all needed repairs, promptly after such damage, restoring the Easement Property to its condition prior to the damage. The Landowner shall promptly make any needed repairs to the Landowner's Property and the DSIS equipment that the Landowner may damage.

6. Obstructions to Use of the Easement Property. The Easement Holder may not utilize the Easement Property in a way that materially interferes with its use by

any other person permitted to use it. The Easement Holder acknowledges and agrees that the Landowner's and its future owners or tenants' use of the Landowner's Property may include if permitted by the Village, outdoor kiosks, carts, tent sales, and other events that may occur on the Landowner's Property, which such uses may be allowed, and shall not be considered an obstruction or impediment to the Access Easement. Furthermore, the Easement Holder acknowledges and agrees that the Landowner has the right to modify and construct new improvements on the Landowner's Property, albeit with the necessary permits, and if said improvements interfere with use of the Access Easement by the Easement Holder, then the Landowner shall bear all costs and responsibility to relocate the DSIS equipment or modify its use of the Easement Property.

7. Indemnity/Insurance/Liens. All costs of installation, operation, and maintenance of the Easement Property and any improvements the Landowner installs thereon will be the responsibility of the Landowner as described in the Agreement.

Any contractor coming onto the Easement Property and/or the Landowner's Property on behalf of the Easement Holder shall carry a non-deductible (a) commercial general liability insurance policy, including (but not limited to) contractor's liability coverage, contractual liability coverage, completed operations coverage, broad form property damage endorsement and contractor's protective liability coverage, to afford protection, with respect to personal injury, death or property damage of not less than One Million Dollars (1,000,000) per occurrence combined single limit/ One Million Dollars ($1,000,000) general aggregate (but not less than $500,000 per location aggregate); (b) comprehensive automobile liability insurance policy with a combined single limit for each occurrence of not less than Three Hundred Thousand Dollars ($300,000) with respect to personal injury or death and property damage; and (c) worker's compensation insurance policy or similar insurance in form and amounts required by law. The Easement Holder shall carry similar amounts and types of insurance when it enters onto the Easement Property and/or the Landowner's Property, provided, such insurance may be provided through the municipal insurance plan of Easement Holder. In connection with any installation, operation, maintenance or inspection of the Easement Property by the Easement Holder or its agents, employees or contractors, the Easement Holder shall indemnify, defend and hold harmless the Landowner from and against any lien, suit, loss, cost, expense (including reasonable attorneys' fees), personal injury, bodily injury or property damage arising from or relating to such activities of the Easement Holder, its agents, contractors or engineers on the Landowner's Property.

Nothing contained herein shall alter or eliminate any obligations of the Landowner to reimburse the Easement Holder for costs and expenses, as provided in the DSIS.

8. Enforcement of Agreement. The Landowner and Easement Holder shall have the right to legally enforce this Access Easement and the covenants, conditions and restrictions set forth herein, by whatever action or actions are legally available, including, without limitation, enjoining any violation or threatened violation hereof.

9. Amendments. This Access Easement may not be modified, amended or terminated except by execution and recording of a written instrument signed by both the Landowner and Easement Holder.

10. Successors. All of the terms, covenants, conditions, and obligations set forth in this Access Easement and the Agreement shall inure to the benefit of and bind the Landowner and Easement Holder, and their respective personal representatives, heirs, successors, transferees, assigns, and all future owners of the Landowner's property this Access Easement and the Agreement shall continue as a servitude running in perpetuity with the Landowner's Property.

11. Severability. If any provision or specific application of this Access Easement is found to be invalid by a court of competent jurisdiction, the remaining provisions or specific applications of this Access Easement shall remain valid and binding.

12. Governing Law. This Access Easement shall be governed by and construed under the laws of the State of Wisconsin. The parties agree that any dispute hereunder shall be venued only in the Circuit Court for Kenosha County.

13. Attorneys Fees and Interest. If either party defaults in the performance or observation of any of the terms, conditions, covenants or obligations contained in this Access Easement and the complaining party places the enforcement of all or any part of this Access Easement in the hands of an attorney, of if that party incurs any fees or out-of-pocket costs in any litigation, negotiation or transaction, the party that substantially prevails in any such dispute shall be reimbursed for its actual attorneys' fees and costs whether or not litigation is actually commenced. Any sums not paid when due, including without limitation any maintenance fee, shall accrue interest from the due date until paid at eighteen percent (18%) per annum.

(Signatures are on the next pages).

IN WITNESS WHEREOF, SKYLINE TOWERS LLC has executed this Access Easement this _____ day of _____, 2016.

SKYLINE TOWERS LLC

By:_____
Name: Jeffrey T. Marlow
Title: Managing Member

STATE OF _____)
)SS
COUNTY OF _____)

This instrument was acknowledged before me in _____, WI on _____ ___ , 2016, by Jeffrey T. Marlow as the duly authorized Managing Member of SKYLINE TOWERS LLC.

_____
Signature of Notary Public

_____
Typed or Printed Name of Notary Public

Notary Public, State of _____
My Commission (expires) on:
_____
(is permanent) _____

VILLAGE OF PLEASANT PRAIRIE, WISCONSIN:

By: _____
Name: John P. Steinbrink
Title: Village President

ATTEST:

_____
Name: Jane M. Romanowski
Title: Village Clerk

STATE OF WISCONSIN)
) SS:
KENOSHA COUNTY)

This Agreement was acknowledged before me in Pleasant Prairie, WI on _____ ____, 2016 by John P. Steinbrink and Jane M. Romanowski, as duly authorized Village President and Village Clerk, respectfully, of the Village of Pleasant Prairie, a Wisconsin municipal corporation.

_____
Signature of Notary Public

_____
Typed or Printed Name of Notary Public

Notary Public, Kenosha County, State of Wisconsin
My Commission expires:
_____

CONSENT OF MORTGAGEE

The undersigned, being the holder of a mortgage against the Property, consents to the Access Easement set forth above and agrees that its interest in the Property shall be subject to this Access Easement.

Dated: _____ _____, 2016.

_____ Bank

By:_____
Name: _____
Title: _____

ACKNOWLEDGMENT

STATE OF WISCONSIN)
) SS:
_____COUNTY)

This instrument was acknowledged before me on _____ ____, 2016 by _____, (Name) the _____ (Title) of the _____ (Bank).

_____
Signature of Notary Public

_____
Type or Print Name of Notary Public

Notary Public, State of _____
My commission expires: _____

This instrument drafted by:

Jean M. Werbie-Harris
Community Development Director
9915 39th Avenue
Pleasant Prairie, WI 53158
262-925-6718

EXHIBIT A

Legal Description of Landowner's Property

LOT 3 OF CERTIFIED SURVEY MAP #2458 RECORDED AS DOCUMENT #1420259 A REDIVISION OF OUTLOT 9 OF THE PRAIRIE RIDGE SUBDIVISION PLAT #5745 AT THE KENOSHA COUNTY REGISTER OF DEEDS OFFICE AND FURTHER IDENTIFIED AS PART OF THE SOUTHEAST ONE-QUARTER, NORTHEAST ONE-QUARTER, NORTHWEST ONE-QUARTER AND NORTHWEST ONE-QUARTER OF U.S. PUBLIC LAND SURVEY SECTION 8, TOWNSHIP 1 NORTH, RANGE 22 EAST OF THE FOURTH PRINCIPAL MERIDIAN IN THE VILLAGE OF PLEASANT PRAIRIE, KENOSHA COUNTY, WI. THE SITE CONTAINS APPROXIMATELY 3.35 ACRES MORE OR LESS.

ORDINANCE # 16-__

ORDINANCE TO CREATE THE PLANNED UNIT DEVELOPMENT PURSUANT TO CHAPTER 420-137 OF THE VILLAGE ZONING ORDINANCE FOR THE SKYLINE TOWERS APARTMENT DEVELOPMENT IN THE VILLAGE OF PLEASANT PRAIRIE, KENOSHA COUNTY, WISCONSIN

BE IT ORDAINED by the Village Board of Trustees of the Village of Pleasant Prairie, Kenosha County, Wisconsin, that Chapter 420 Attachment 3 Appendix C Specific Development Plan be created entitled Skyline Towers Planned Unit Development is hereby amended to read follows

Skyline Towers Planned Unit Development

a. It is the intent that the Skyline Towers Apartment Development, on the property as legally described below is in conformity with the Village of Pleasant Prairie (Village) adopted Comprehensive Land Use Plan and the Village adopted Prairie Ridge Neighborhood Plan; would not be contrary to the general health, safety, welfare and economic prosperity of the community; and that the architectural, building and site design, property management, landscaping, grading and drainage, lighting and general site development will result in an attractive and harmonious residential environment of sustained desirability and economic stability and will not adversely affect the property values of the surrounding neighborhood.

b. Legal Description: The properties included are collectively known as Lot 3 of CSM 2458 as recorded at the Kenosha County Register of Deeds Office as Document # 1420259, a re-division of Outlot 9 of the Prairie Ridge Subdivision and located in U.S. Public Land Survey Section 8, Township 1 North, Range 22 East in the Village of Pleasant Prairie is hereinafter referred to as the "DEVELOPMENT".

c. Requirements within the DEVELOPMENT:

(i) The DEVELOPMENT shall be in compliance with all Federal, State, County and Village Ordinances and regulations except as expressly modified in subsection (d) below.

(ii) The DEVELOPMENT shall be in compliance with the *Declaration of Covenants and Restrictions for Prairie Ridge Commercial Development*, as may be amended from time to time, as recorded at the Kenosha County Register of Deeds Office.

(iii) All private improvements for this DEVELOPMENT shall be installed and constructed by the Developer and all private improvements shall be maintained by the Owners of of the DEVELOPMENT as shown on the following plans and collectively known and the PUD Development Plans: **Exhibit 1**: Site and Civil Plans; **Exhibit 2:** Architectural Building Plans; and **Exhibit 3:** Building Material and Colors.

(iv) The DEVELOPMENT, including but not limited to, the building, accessory structure garbage enclosures, sign(s), fence(s), landscaping, parking lots, exterior site lighting, monument sign etc., and the site as a whole, shall be maintained both inside and outside in a neat, presentable, aesthetically pleasing, structurally sound and non-hazardous condition. Maintenance shall be conducted on a regular basis both inside and outside of the buildings and site.

(v) The owners of the DEVELOPMENT shall be in compliance with the Digital Security Imaging System Agreement (DSIS) and Access Easement as approved by the Village Board on June 6, 2016.

(vi) The apartment building shall comply with the fire suppression requirements of Chapter 180 of the Village Municipal Code.

(vii) Residential communication structures pursuant to Article XIV of the Village Zoning Ordinance are prohibited within the DEVELOPMENT.

(viii) All buildings and site modifications (excluding general building and site maintenance) within the DEVELOPMENT shall be made in accordance with the applicable Village Ordinance and Codes at the time the modification is proposed.

(ix) All building/structures and all exterior additions, remodeling or alterations to the any building/structures within the DEVELOPMENT shall be constructed of the same or complimentary exterior materials, colors and architectural style to ensure a unified commercial development, including signage, lighting, outdoor furniture, etc. with the Prairie Ridge entire commercial area included within the Prairie Ridge Subdivision.

(x) All exterior site building and landscaping maintenance shall be performed regularly by the owners or managers of the DEVELOPMENT. Copies of any property inspection reports along with exterior and interior building inspection reports shall be made available to the Village upon request.

(xi) On-site management and maintenance and cleaning staff shall be provided.

(xii) Pursuant to the lease agreement no dogs are allowed within the DEVELOPMENT.

(xiii) No trucks [e.g. semi cab, semi-trailer, construction vehicles (except when permitted construction activities are taking place), step vans, delivery vans (except when goods and merchandise are being delivered), business-related vehicles with advertising displayed on the vehicles, catering vehicles, other commercial vehicles, etc.] parking allowed within the DEVELOPMENT.

(xiv) Temporary or permanent storage containers (some having brand names such as P.O.D.S, S.A.M.S., etc.) are not allowed within the DEVELOPMENT.

(xv) No flags, pennants, streamers, inflatable signage, spot lights, walking signs, shall be affixed to any building, landscaping vehicle, roof-top, or the ground shall be allowed unless expressly permitted by the Zoning Ordinance.

(xvi) The DEVELOPMENT shall be maintained in a neat, presentable, aesthetically pleasing, structurally sound and nonhazardous condition. All litter and debris shall be promptly removed.

(xvii) The DEVELOPMENT shall not be used for any outside parking (neither overnight nor during the day) of junked, inoperable, dismantled or unlicensed vehicles. All junked, inoperable, dismantled or unlicensed vehicles that are parked outside will be issued citations.

(xviii) In the event that public transportation to service the DEVELOPMENT is requested, it shall be the responsibility of the property owner to fund the cost of providing such public transportation to and from the DEVELOPMENT.

(xix) The DEVELOPMENT shall comply with all applicable performance standards set forth in Section 420-38 of the Village Zoning Ordinance.

(xx) The DEVELOPMENT, regardless of property ownership, shall be operated and maintained in a uniform manner and the DEVELOPMENT shall continue to operate under the detailed and structured process related to Leasing and Property Management as presented by the developer at the Public Hearing held by the Plan Commission on May 23, 2016 Plan Commission.

(xxi) The DEVELOPMENT shall be operated and maintained in a uniform manner, and shall continue to comply with this PUD, which may be amended from time to time regardless of property ownership. If the DEVELOPMENT, or any portion of the DEVELOPMENT, is sold to another entity(s), the DEVELOPMENT shall continue to operate and be maintained as a unified residential development. All of the building exteriors shall be maintained and shall be painted only with the approved colors as shown on ***Exhibit 3***, unless expressly approved by the Village.

(xxii) No additional land divisions shall be allowed within the DEVELOPMENT unless approved by the Village.

d. Specific Modifications to the Village Ordinance and Regulations and Specific Requirements for the DEVELOPMENT:

(i) Section 420-116 related to the R-11 Multiple-Family Residential District regulations is amended to read as follows:

A. Primary purpose and characteristics. The DEVELOPMENT will provide multiple-family residential development wherein the net density shall not exceed 21.2 dwelling units per acre.

B. Permitted uses/structures within the DEVELOPMENT.

(1) One 60-unit building (6 efficiency units, 27 1-bedroom units and 27 2-bedroom units) with a minimum of 1 space per unit of underground parking and a detached garbage dumpster enclosure.

(2) Model units within the building.

(4) Home occupations per Article VII.

(4) Driveways and parking facilities per Article VII of Chapter 420 except as expressly amended in this PUD Ordinance.

(5) Fences per Article XI of Chapter 420.

(6) Decks and porches are part of the building therefore shall meet all the required building setbacks specified in this PUD Ordinance.

(7) Signs per Article X of Chapter 420 except as expressly amended in this PUD Ordinance.

(9) Essential services, which may be constructed on the lot prior to construction of the permitted principal structure.

C. Unclassified uses. It is recognized that it is neither possible nor practical to list all of the permitted accessory uses and structures that are compatible with those listed above in Subsection B, and therefore it is intended that said list of accessory uses and structures be only illustrative. Any individual aggrieved by a failure to list a permitted accessory use or structure in said subsection shall have the right to file a petition with the Village Zoning Administrator for determination. The Village Zoning Administrator, in making the determination, shall find that an accessory use or structure is subordinate to the permitted principal use of a structure, land or water, is located on the same lot or parcel and serves a purpose customarily incidental to the permitted principal use in said district.

D. Lot area and width.

(1) The lot within the DEVELOPMENT shall have a minimum area of 108,900 square feet (2.5 acres).

(2) The lot within the DEVELOPMENT shall have a minimum frontage of 300 feet ion a public street.

E. Design standards.

(1) The site and the building shall be constructed pursuant to the PUD Development Plans as conditionally approved by the Village Plan Commission on May 23, 2016 as shown on **Exhibits 1-3** of this PUD. Any alterations shall require approval of the Village Board by an amendment of this ordinance.

(2) The apartment building shall not exceed 51 feet in height.

(5) The units in the building shall meet the following requirements:

(a) Efficiency units shall have a minimum floor area of 600 square feet;

(b) One-bedroom units shall have a minimum floor area of 800 square feet;

(b) Two-bedroom units shall have a minimum floor area of 1,000 square feet.

(6) A minimum of 50% of the DEVELOPMENT shall remain as open space.

(7) Each apartment building within the DEVELOPMENT shall:

(a) have an internal fire sprinkler system for fire safety;

(b) be constructed with 2 x 6 construction on the external walls of the buildings as shown on the approved PUD Development Plans;

(c) install high performance vinyl windows and patio doors with low E glass and argon gas as shown on the approved PUD Development Plans;

(d) install partial stone façade blended with maintenance free with aluminum frame and full glass front entry doors for security and aesthetics as shown on the approved PUD Development Plans;

(f) install and maintain an intercom entry system;

(g) use custom plastered interior walls as shown on the approved PUD Development Plans;

(h) provide individual sound walls to divide each unit as shown on the approved PUD Development Plans that specifically includes:

(i) Sound insulation between the floors and RC-1 channel is added to the underside of the floor truss for additional reduction of sound transfer;

(ii) ¾ inch gypcrete poured on 2nd and 3rd floors for another sound barrier and it also acts as another fire preventative;

(i) have deadbolt and peepholes in each of the individual unit entry doors; and

(j) install a 30 year dimensional shingle roofs as shown on the PUD Development Plans.

F. Setbacks.

(1) Street setback: minimum of 40 feet from all public streets and the back of curb from any private street.

G. Authorized sanitary sewer system. Pursuant to Section 420-32 of the Village Municipal Code. In addition, sanitary sewer sampling manholes shall be installed pursuant to the PUD Development Plans (**Exhibit 1**) and maintained.

H. Authorized water supply system. Municipal water is required for all domestic and fire protection water requirements of the development including the required irrigation system.

(ii) Section 420-76 Q related to Multi-family Residential Development Identification Signs be amended to read as follows:

Q. Multi-family Residential Development Identification

(1) Maximum number: one sign per development.

(2) Minimum setback: five (5) feet from the right-of-way of a public street or back of curb of a private street.

(3) Maximum height: six (6) feet.

(4) Maximum area: 36 square feet per face.

(5) Landscaping shall extend a minimum of three feet in every direction from the base or other support structure of the sign, except if the sign is located in a boulevard island, then the landscaping shall not extend closer than two feet from the back of the curb of the boulevard island. This needs to be confirmed on landscaping plans

(6) May be illuminated.

(7) May be placed on two supports or may be placed on a solid-appearing decorative base which supports a minimum of 75% of the display of the sign.

(8) The sign supports or base shall be constructed of materials that complement the materials used in the development.

(9) Maximum height of base under display: two (2) feet.

(10) Full street address and name shall be placed on the sign.

e. Amendments

(i) The PUD regulations for said DEVELOPMENT may be amended pursuant to Section 420-13 of the Village Zoning Ordinance.

(ii) The Zoning Administrator has the discretion to approve minor changes, adjustments and additions to this PUD ordinance document without the need for Village Plan Commission and Village Board review and approval.

Adopted this _____ day of _____2016.

VILLAGE OF PLEASANT PRAIRIE

ATTEST:

_____
John P. Steinbrink
Village President

_____
Jane M. Romanowski
Village Clerk

Posted: _____

___-Skyline Towers PUD
CODE1603-002

EXHIBIT 3

ITEM	MANUFACTURER	COLOR
EXTERIOR		
Cultured Stone	Eldorado, Dutch Quality	Sienna Weather Ledge
Brick	Belden	Midland Blend
Roofing	Certainteed Dimensional	Weatherwood
Deck Railing & Spindles	Elite Fence Products	Beige
Windows	JeldWen	Almond
Garage Door	American Overhead Door	Almond
Aluminum Entrances	Tubelight	Sandstone
Siding - Lap Siding	HardiPlank - Cedarmill	Khaki Brown
Shakes - Shingle Siding	Hardie Shingle - Straight Edge	Rich Expresso
Trim, Corners, Band Boards, Lineals	Hardie Board	Navajo Beige
Deck Posts, Caps	Hardie Board	Navajo Beige
Soffits & Fascia, Aluminum	Rollex	Stone
Gutters & Downspouts	Rollex	Stone
Dumpster Enclosure	Concrete Block	Color to match Khaki Brown
Dumpster Vinyl Gate	n/a	Color to match Khaki Brown
INTERIOR		
Interior Trim/Doors	Sherwin Williams	Creamy SW 7012
Cabinets	Showcase	Dark Roast
Countertops - Kitchen	Granite	Ornamental
Countertops - Bathrooms	Granite	Ornamental
Carpet - Units	Engineered floors touchdown II E115	#1825
Carpet - Unit Stairways	Bigelow, Essentials collection	Artfully Done #7838
Carpet - Common Hallway/Stairs	Bigelow, Essentials collection	Artfully Done #7838
IVC Flooring	Mohawk Distinctive Luxury Plank	Custome Made ALP601
Interior Wall Paint	Sherwin Williams	Kilim Beige #6106
Window Treatments	Sherwin Williams	Alabaster
Appliances	Frigidaire	Black
Laundry	Frigidaire	White
Base board tile in bathrooms	HJ Martain	Manatoba Walnut
Elevator Interior	Antique Walnut	Otis Elevator
Elevator Doors	Painted - Mushroom EN-4	Otis Elevator

Governing Agency Contacts

PLEASANT PRAIRIE VILLAGE HALL
9915 39TH STREET
PLEASANT PRAIRIE, WI 53158
OFFICE: (262) 694-1400

- **COMMUNITY DEVELOPMENT DEPARTMENT**

JEAN WERBIE-HARRIS, DIRECTOR
- PLANNER, ZONING ADMINISTRATOR
OFFICE: (262) 925-6718
EMAIL: jwerbie-harris@plprairiewi.com

PEGGY HERRICK
- ASSISTANT PLANNER & ZONING ADMINISTRATOR
OFFICE: (262) 925-6716
EMAIL: pherrick@plprairiewi.com

- **ENGINEERING DEPARTMENT**

MATT FINEOUR, P.E.
- VILLAGE ENGINEER
OFFICE: (262) 925-6778
EMAIL: mfineour@plprairiewi.com

KURT DAVIDSEN, P.E.
- ASSISTANT VILLAGE ENGINEER
OFFICE: (262) 925-6728
EMAIL: kdavidsen@plprairiewi.com

- **PUBLIC WORKS DEPARTMENT**

JOHN STEINBRINK, JR.,
- SUPERINTENDENT
ROGER PRANGE MUNICIPAL BUILDING
8600 GREEN BAY ROAD
OFFICE: (262) 925-6768
EMAIL: jsteinbrink@plprairie.com

JESSE HOULE, P.E.
- CONSTRUCTION MANAGER
OFFICE (262) 948-8945
EMAIL: jhoule@plprairiewi.com

STEVE WLAHOVICH
- ENGINEERING TECHNICIAN
OFFICE: (262) 925-6767
EMAIL: swlahovich@plprairie.com

- **BUILDING INSPECTION DEPARTMENT**

SANDRO PEREZ
-BUILDING INSPECTION SUPERINTENDENT
OFFICE: (262) 694-9304
DIRECT: (262) 925-6722
EMAIL: sperez@plprairie.com

DONALD KOEHNE
-BUILDING INSPECTOR
OFFICE: (262) 694-9304
EMAIL: dkoehne@plprairiewi.com

MICHAEL KAPRELIAN
- BUILDING INSPECTOR
OFFICE: (262) 694-9304
EMAIL: rnichols@plprairiewi.com

FIRE & RESCUE DEPARTMENT

DOUG McELMURY,
- CHIEF OF FIRE & RESUCE
8044 88TH AVENUE
OFFICE: (262) 694-8027
EMAIL: fireandrescue@plprairie.com

CRAIG ROEPKE
- DEPUTY CHIEF
DIRECT: (262) 948-8981
EMAIL: croepke@plprairiewi.com

THOMAS CLARK
- LIEUTENANT
DIRECT: (262) 948-8982
EMAIL: tclark@plprairiewi.com

WI DEPARTMENT OF NATURAL RESOURCES
ELAINE JOHNSON
- WATER RESOURCE SPECIALIST
OFFICE: 262-884-2136
EMAIL: elaine.johnson@wisconsin.gov

PETER WOOD
- WATER RESOURCES ENGINEER
OFFICE: 262-884-2360
EMAIL: peter.wood@wisconsin.gov

Public Utility Contacts

AMERICAN TRANSMISSION COMPANY
BRIAN MCGEE
OFFICE: 262-506-68955
EMAIL: bmcgee@atcllc.com
EMERGENCY NUMBER: (800) 972-5341

WISCONSIN D.O.T.
KEVIN KOEHNKE, PERMITS COORDINATOR
SOUTHEAST REGION
OFFICE: (262) 548-5891
EMAIL: kevin.koehnke@dot.wi.gov

AT&T
MIKE TOYEK
OFFICE: 262-636-0549
EMAIL: mt1734@att.com

TDS TELECOM
SOUTHEAST WISCONSIN
OFFICE: 877-483-7142

TIME WARNER CABLE
STEVE CRAMER
- UTILITY COORDINATOR
OFFICE: 414-277-4045
EMAIL: steve.cramer@twcable.com
EMERGENCY NUMBER: (800) 627-2288

WE-ENERGIES
LINDA SCHREIER
KENOSHA SOUTH
OFFICE: 262-552-3228
EMAIL:
linda.schreier@we-energies.com

NATURAL GAS EMERGENCY:
(800) 261-5325
ELECTRICAL EMERGENCY:
(800) 662-4797

Office of the
Chief of Fire & Rescue
Doug McElmury

VILLAGE STAFF MEMORANDUM

TO:	Jean Werbie-Harris, Community Development Director
FROM:	Doug McElmury, Chief Fire & Rescue
CC:	Craig Roepke, Deputy Chief Fire & Rescue
	Lt. Thomas Clark, Fire & Rescue Department
	Peggy Herrick, Assistant Planner, Community Development
SUBJECT:	Fire Department review of Updated Site Plans and Building Elevations for Skyline – Lexington Homes
DATE:	April 06, 2016

These are initial comments for the updated conceptual plan received for Skyline – Lexington Homes to be located in the general area of 94th Ave. and 95th St. in Pleasant Prairie.

The Fire and Rescue Department will be responsible for providing fire prevention inspections of this facility, twice annually. Based on the limited information and conceptual plans submitted, the Fire & Rescue Department have the following comments regarding the site:

- This is a preliminary review based on information available. As additional information and details become available, additional Fire & Rescue comments will be forthcoming.

Distribution of Comments: the person who obtains the building permit to all contractors and subcontractors affected by this document shall distribute copies of these comments. This document outlines critical times and deadlines. All recipients of this document must become familiar with the contents.

Compliance: A letter shall be submitted to the Fire & Rescue Department prior to receiving a building permit, stating that the project will comply with all requirements addressed within this document.

Conflicts: In the event a conflict in code(s) is identified, or a conflict with the insurance carrier criteria occurs, the more stringent shall apply. In the event this conflicts with any codes adopted by the State of Wisconsin, the owner must petition the State directly for a variance. The Owner must demonstrate that they will provide materials or design equivalent to the code or that they will exceed the code when petitioning the State of Wisconsin and/or the Village of Pleasant Prairie where applicable.

Fire Safety System Plans: such as fire sprinkler and fire alarm plans, will need to be submitted to the State of Wisconsin Department of Safety and Professional Services and also to this fire department for review. No installation of any fire protection system is allowed until a satisfactory review is obtained from both departments.

Pre-Construction Meeting: A pre-construction meeting shall take place with the general contractor, the fire protection contractor, the Fire and Rescue Department and any other sub-contractor prior to the installation of any underground fire protection. The purpose of this meeting is to assure that the requirements of the State of Wisconsin that only a Wisconsin licensed sprinkler fitter shall perform the installation of all devices, etc. All parties will be asked to initial this document and or permit. Any violation of the installing requirements will be reported in writing to the State of Wisconsin Department of Safety and Professional Services.

1. **Site Access:** Access shall be provided around the perimeter of the site for all Fire Department apparatus, and must comply with the State of Wisconsin and the International Building Code, 2009 edition. A minimum wall-to-wall turning radius of 45'-0" shall be allowed for apparatus movement.
    a. All entrances from public streets, as well as road and driveways around the proposed building must be a minimum of 30 feet wide.
    b. All exterior exit pathways as well as access to the Fire Pump room shall have a hard surface, leading to a hard surface.
    c. An exterior personnel door shall be located in close proximity to each fire sprinkler riser.
    d. A minimum clearance of 24 feet will be maintained in parking lot areas from rear of each vehicle or rear of vehicle to curb of building.
2. **Required Licenses:** A Wisconsin licensed fire protection contractor and Wisconsin licensed sprinkler fitters must install underground fire mains and aboveground fire protection. Periodic inspections of the job site will be made by fire inspectors to assure compliance.
3. **Insurance Carrier:** The Owner of this project shall submit to the insurance carrier for review the plans for both underground water distribution and fire protection prior to construction. The Fire & Rescue Department shall receive a copy of the comments when plans are submitted for review.
4. **Review and Comments:** At such time more information is provided for this project, the Fire Department will review and comment on the following areas outlined below.

    A. Site and Operational Permits
    1. Site accessibility (Plans provided do not specific clearances or distances)
    2. Fire Pump Location
    3. Pumper Pad
    4. Fire hydrant spacing

    B. Conditional Use and Operational
    1. Standpipe outlet locations .
    2. Fire alarm pull stations
    3. Emergency and Exit Lighting
    4. Fire extinguishers
5. **Plan Review, Permits and Fees:** The plans for the fire protection underground, aboveground and fire alarm system shall be submitted for review a minimum of four (4) weeks before installation is scheduled to begin. The Village will use an independent fire safety consultant for review of all fire protection plans submitted. A satisfactory review must be completed before any permits will be issued and before construction can begin.
6. **Permit fees:** must be paid at time of submission for review. Work cannot begin until all permits have been issued. A typical review turnaround is four weeks

    The following fees and permits are generated directly from the Fire & Rescue Department.

    a. Bulk water Usage
    b. Fire Protection Plans for Underground and Aboveground
    c. Fire Alarm System Plans
    d. Kitchen Hood Systems Plans

    NOTE: Permits are required from the Fire & Rescue Department for the installation of water main in addition to any permits required by other Village of Pleasant Prairie Departments.
7. **Occupancy:** All fire and life safety requirements must be in place prior to any building being occupied.
8. **Exterior Doors:** All outside doors must have access to the interior. Such as a lock and handle provided at each door.
9. **AED:** The owner shall install one or more public access Automatic External Defibrillator (AED) onsite for employee and public use in the event of a sudden cardiac arrest to be located in the clubhouse building. The Fire and Rescue Department can provide the training necessary to perform CPR and to operate the AED.

10. **Storage:** Maximum height, width and aisle ways and egress pathways must be maintained and will be enforced. The same concerns apply to the storage of quantities of combustibles (plastics and cardboard) and other storage of flammable liquids or chemicals must also be properly identified, placarded and stored.

11. **Elevators:** must comply with Village of Pleasant Prairie Ordinance 180-20, including acceptable minimum size and emergency notification.

12. **Severe Weather Shelter:** The architect shall identify the area within each building that can be used as a "severe weather shelter" or "safe haven" during severe weather such as a tornado. That area will be identified with signage.

13. **On Premise Secure Key System:** Knox Company Rapid Entry System, "Knox Boxes" shall be provided for each building. A determination of the exact number required will need to be made during the pre-construction meeting. One by each riser door, fire pump room and other needed access routes. The Knox Boxes shall be Model 4400. Two sets of all keys (Master, fire alarm pull station, annunciator, elevator, etc.) shall be placed within the box, as well as a copy of the pre-fire plan. There shall be a master key system for the apartment keys.

14. **MSDS Storage Box:** A minimum of one (1) Brady model JS1 designed for Material Safety Data Sheet storage shall be provided for each tenant to contain the data sheets on all products that are considered hazardous within the facility. The MSDS Box(s) shall be installed within the Fire Pump Room.

15. **Fire Extinguishers:** Shall meet the current printed edition of NFPA 10 (Portable Fire Extinguishers) for the specific use of the building and be in sufficient number. Final approval, of fire extinguisher locations and quantity, will not be given until occupancy is taken, to see how a tenant furnishes the space. The company providing the fire extinguishers shall submit a letter to the Fire and Rescue Department stating the locations and size of the extinguishers are in compliance with NFPA 10.

16. **Emergency and Exit Lighting:** Exit and Emergency Lighting shall be provided and shall have battery backup. Combination units are acceptable and recommended. An Emergency Generator eliminates the need for battery backup. Exit and Emergency Lighting shall not be placed on electrical circuits that cannot be disturbed or interrupted, this is for test purposes. These circuits shall be clearly labeled. An Emergency light shall be placed within the fire pump room.

17. **Sprinkler System:** The building shall be equipped with an "automatic fire sprinkler system". The systems shall be designed and constructed to the current printed edition of NFPA 13, Automatic Fire Sprinklers and the Village of Pleasant Prairie Ordinance 180-16, Automatic Fire Sprinklers. Confirm NFPA edition with the Fire Department prior to system design. Per the attached emails on 3-17-16 <u>all</u> void spaces including attic, floor trusses/cocklofts etc. are to be fully sprinklered.

18. **The following information must be submitted with the sprinkler plans for review:**

    Building height:
    Number of stories/floors:
    Mezzanines:
    Elevators:
    Hazard class:
    Commodity Class:
    Exterior storage:
    Fire protection:

19. **Plan Review (Underground):** A review of the underground drawings is required along with the fire protection drawings before a permit will be issued by the Fire and Rescue Department. Underground plans shall be submitted a minimum of four (4) weeks before installation begins.

20. **Water Service:** If it is determined that the building will be serviced by a combination municipal water and fire protection main, that main must be sized by the fire protection (sprinkler) contractor. No main is allowed to travel underground, under the building.

21. **Fire Hydrants:** The Pumper Pad hydrant is the only new hydrant that will need to be added to the site and shall meet current Village specifications. The existing municipal hydrants located on surrounding roads will meet the additional hydrant spacing requirements. The distance from the finished grade line to the lowest discharge shall be no less than 18 inches and no more than 23 inches.

22. **Fire Hydrant Acceptance**: This project will include the installation of water mains for domestic and fire protection use. Prior to the fire sprinkler system connection to any new water mains (including water mains, fire hydrants, laterals leading to the building and risers) must be hydrostatically tested flushed according to National Fire Protection Association (NFPA–National Fire Code) Standard 24 and witnessed by the Fire Chief and or the Chief's representative, the installing contractor and the fire sprinkler contractor at a minimum.

23. **Fire hydrant / water main flushing:** can be disruptive to the job site and requires significant coordination of all sub-contractors by the General Contractor. Nonetheless flushing is an essential part of assuring public safety. The General Contractor is highly encouraged to coordinate the flushing of all new water mains, fire hydrants, laterals leading to the building and risers with both the sub-contractors responsible, the Village of Pleasant Prairie Engineering Department, Fire & Rescue Department and the Water Utility Department, prior to seeking a 'clean water sample' on this site.
NOTE: The Fire Protection Designer must meet with the Fire and Rescue Department before the underground drawings are submitted for review to finalize the placement of the hydrants.

24. **Pumper Pad:** There shall be dedicated space for a fire engine to have unobstructed access to the Pumper Pad. Both the Fire Department Sprinkler connection and the fire hydrant shall be installed remote from the building and located a minimum distance from the building equal to the highest wall. The fire hydrant shall be located no more than five (5) feet from the roadway and the Fire Department sprinkler connection shall be placed no more than five (5) feet from the fire hydrant. The Fire Department connection shall be constructed along with an underground drain with access for inspection. Both the fire department sprinkler connection and the fire hydrant, (pumper pad), shall be installed remote from the building(s) and located a minimum distance from the building equal to the highest wall. Based on the updated plan that was provided, the pumper pad shall be located on the north private roadway with a 12' wide pull-off for the engine.

    NOTE: *The Fire Department Connection riser shall include a single five (5) inch Storz fitting.*

25. **Fire Pump:** Should a fire pump be required based on the design, There shall be sufficient room to maneuver within the fire pump room. There shall be direct ingress/egress from the fire pump room directly to the exterior of the building; a paved surface shall lead to the fire pump room. There shall be Emergency Lighting installed within the Fire Pump Room. The pump test header location shall comply with 180-16. There shall also be sufficient room for placement of the Fire Alarm Control Panel (FACP), along with the required maps of the fire protection systems.

26. **Standpipes:** If determined that hose valves or standpipes be required in areas of the building. In lieu of 1.5 inch hose stations, the building shall be equipped with standpipes that shall consist of 2-½ inch NST valve, capable of delivering 250 GPM, at 75 PSI measured at the standpipe valve. The standpipes shall be wet and placed adjacent to all exterior exit doors, same side as the door handle/knob. Village Ordinance 180.16 G.

27. **Strobe Light:** A strobe light shall be provided for each riser and installed vertically above each sprinkler water flow bell. The strobe light shall operate for a sprinkler water flow. The lens color shall be RED. The strobe light shall meet Village specifications as found in section 180-16 K of the Sprinkler Ordinance. A strobe light(s) shall also be provided outside of the fire pump/riser room to indicate a fire pump run and/or a waterflow alarm, with signage installed under each strobe light.

28. **Bollards:** Shall be placed near fire hydrants, remote post indicator valves (PIV) and Fire Department connection(s) to prevent damage. Bollards shall be <u>6 inches</u> in diameter. Bollards shall not obstruct charged fire hoses. It is recommended that the Fire Department approve the location of the bollard(s) before final placement is made.

29. **Fire Alarm System: The system shall be fully addressable so that detailed information will be received about the device in alarm.** Utilizing a fire pull station, sprinkler water flow, or any other fire detection device that maybe installed in this building shall activate the internal fire alarm system. The systems shall be designed and constructed to the current printed edition of NFPA 72. **Confirm NFPA edition with the Fire Department prior to system design.**

a. **Manual Fire Alarm Pull Stations:** Shall be located at a minimum, immediately adjacent to each exterior door. Any additional exterior doors will be required to meet this requirement. The pull station shall not be placed in the area of the door, but immediately adjacent to the door jamb.

b. **Pull Stations and Audiovisual Alarms:** Shall be installed per ADA requirements.

c. **Smoke and Heat Detection:** Shall be installed as required.

d. **Tamper Switches:** Tamper switches shall be placed on all sprinkler valves and be identified on the annunciator panel.

e. **Fire Alarm Control Panel (FACP): Shall be addressable.** The main FACP will be placed in the fire pump/riser room. Remote annunciator panel location(s) will also need to be determined during the pre-construction meeting. The annunciator panel type shall be approved by the Fire & Rescue Department. The panel shall identify a fire sprinkler water flow by riser, and the specific locations of the fire alarm pull stations and any other fire detection devices that may be installed in this building.

f. **FACP Nomenclature:** Confirmation of nomenclature shall be discussed between the Fire Department and the fire alarm program technician prior to any inspections.

g. **Remote Annunciator Panel: Shall be addressable.** The full-function remote annunciator panel shall be approved by the Fire and Rescue Department. The panel shall identify a fire sprinkler water flow by riser, and the specific locations of the fire alarm pull stations and any other fire detection devices that may be installed in this building. The remote annunciator panel shall be mounted in the main entrance lobby.

h. **Transmission of Fire Alarms.** The method of transmission to central station must be approved by the Fire & Rescue Department. i.e. RF Radio, cellular, VOIP, or other approved technologies.

i. **FACP Main Panel:** There will be one main fire alarm panel within a building. The system will not be split into two or multiple fire alarm panels interconnected together. (Example: West wing is one panel, East wing is a different panel)

j. **Central Station:** The Fire Alarm Control Panel shall transmit all fire alarm, tamper, trouble and supervisory signals to a central station that is certified by Underwriters Laboratories (UL) and/or Factory Mutual (FM) and approved by the Fire & Rescue Department. The owner shall provide such documentation for approval. It is recommended that the owner consult with the Fire & Rescue Department prior to signing any contracts with the Central station.

Fire:	Pleasant Prairie Fire & Rescue
Medical:	Pleasant Prairie Fire & Rescue
Phone numbers	
Emergency:	**(262) 694-1402**
Non-emergency:	(262) 694-7105
Business:	(262) 694-8027

30. **Final Inspection:** The General Contractor shall provide the following documentation at the time the Final Inspection takes place and before a building occupancy certificate will be issued.

a. The fire protection contractor shall provide the owner with a letter (upon completion of the sprinkler work) stating the sprinkler system, or portion thereof, is “100% operational and built according to the design”, Village Ordinance, 180-16 N.

b. The fire alarm contractor shall provide the owner with a letter (upon completion of the fire alarm work) stating the fire alarm system, or portion thereof, is “100% operational and built according to the design”

c. Copy of contract with fire alarm central monitoring station.

d. Copy of UL and/or FM certificate(s) for the fire alarm central monitoring station.

e. Copies of the fire protection underground flushing documents.

f. Copies of the underground and fire sprinkler hydrostatic test certificates.

g. Copies of the fire sprinkler operational test certificates.

h. Copies of the fire alarm test documents.

i. Copies of other test documents such as, hood/duct, smoke, etc…

j. The Pleasant Prairie Fire and Rescue Department shall have all information needed for our pre-fire plan prior to occupancy.

k. Provide two- (2) CD's, one for the property owner and one for the Fire & Rescue Department. The disks shall include all Floor plans and fire protection plans for the building in an as-built condition.

l. Maps of the fire alarm and fire sprinkler system shall be placed in the fire pump room, near the fire alarm control panel; the maps shall be hung on the wall, with a waterproof covering and accessible to firefighters wearing bulky clothes and equipment.

m. AED is in place at such time a tenant takes occupancy.

n. A copy of the tenants Emergency Plan must be submitted to the Fire & Rescue Department before occupancy.

DPW PLAN REVIEW COMMENTS

PLAN NAME: Skyline

PLAN NUMBER: CODE1603-002

DATE REVIEW DUE: 4/6/16

REVIEWER: Steve Wlahovich, Jesse Houle

DATE: 4-5-16

- ☐ **Approved**
- ☐ **Approved With Conditions**
- ☐ **Not Applicable**
- ☒ **Re-submittal Required**
- ☐ **Submittal Received**
- ☐ **Withdrawn**
- ☐ **Denied**

☐ **No Work Impacts DPW**

PAGE#	COMMENT
4	Sampling manhole shall be a straight through manhole, bends are not allowed.
4	There is only one valve in the roadway for the water connection, the end of the pipe has an air release whip on it.
General	Add Village of Pleasant Prairie Sampling manhole detail and Palmer-Bowlus Flume Detail. VOPP will provide.
2	1. 8" water service on 97th Ct. Remove valve notation on end of existing 8" water service. No valve exists. There is an air release on the end of existing stub that needs to be removed by Contractor. 2. West driveway entrance – add note "PROVIDE CURB OPENING PER VILLAGE STANDARD" EXPLAIN OR REMOVE NOTE ALONG 81ST St. – "SAWCUT AND REMOVE EXITING CURB AND GUTTER AND REPLACE WITH MOUNTABLE CURB AND GUTTER"
4	6" Sanitary Sewer/Sampling Manhole: Note: Sampling Manhole is to be located in paved surface. Sewer must pass straight through sampling manhole (no bend at manhole) See detail for sampling manhole included.
General Construction	Show typical detail for sidewalk closure including barricades on both side of any existing sidewalk openings
General Note	All utility service laterals not utilized during construction are to be exposed/removed and abandoned at the respective mainline. (applicable for sanitary, storm and water)

BENCHMARK	BENCHMARK ESTABLISHED BY: ROBERT E. LEE & ASSOCIATES, INC. FIELD VERIFY BENCHMARKS FOR ACCURACY.	
NO.	DESCRIPTION	EL.
1	ARROW ON TOP FLANGE OF FIRE HYDRANT	720.73
2	ARROW ON TOP FLANGE OF FIRE HYDRANT	727.46
3	SOUTH BOLT ON TOP FLANGE OF FIRE HYDRANT	734.86
4	ARROW ON TOP FLANGE OF FIRE HYDRANT	718.73
5	ARROW ON TOP FLANGE OF FIRE HYDRANT	725.95
6	SOUTH BOLT ON TOP FLANGE OF FIRE HYDRANT	727.64

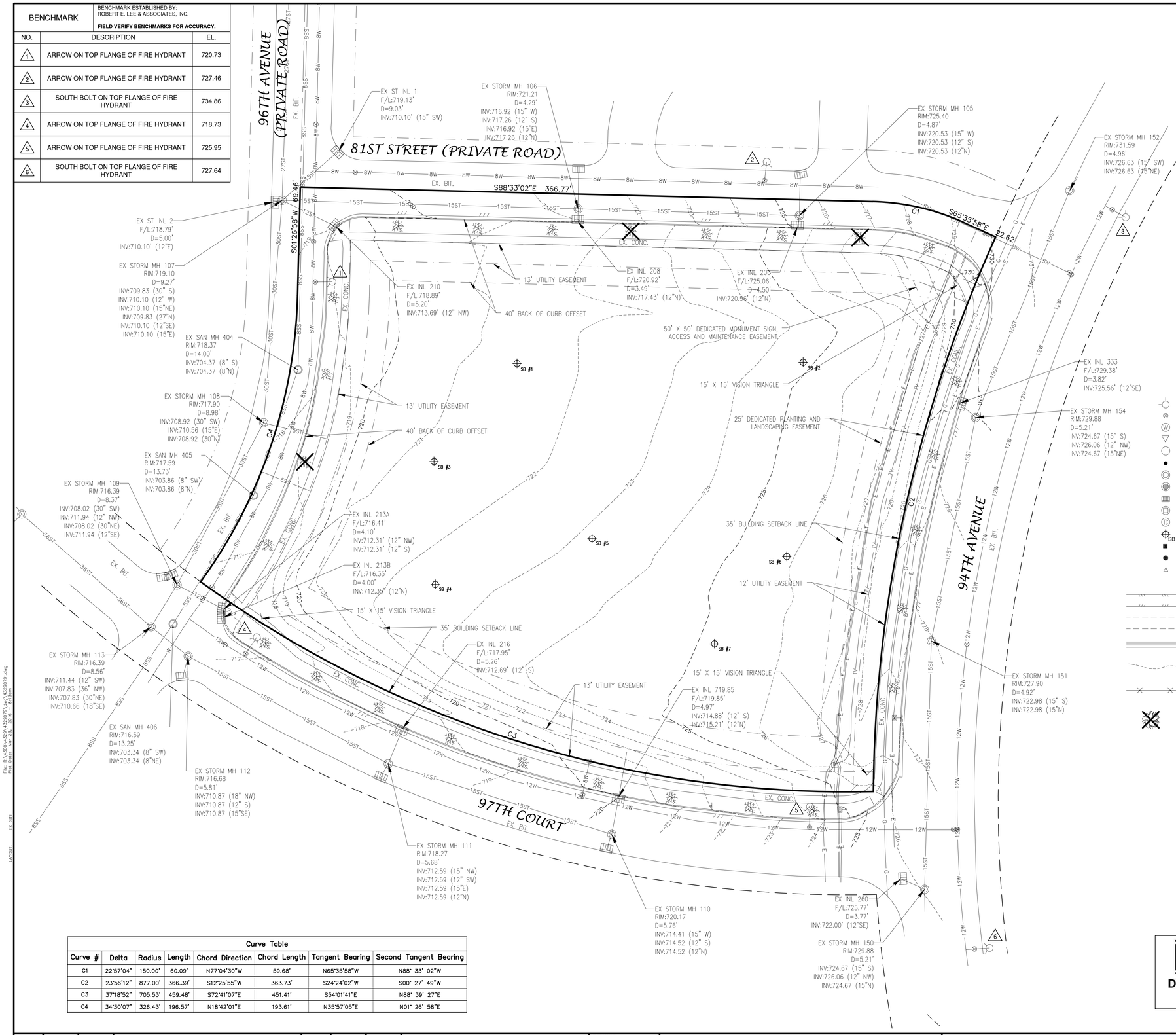

OWNER INFORMATION:

SKYLINE TOWERS, LLC
1300 N KIMPS CT
GREEN BAY, WI 54313

(920) 662-1611

CONTACT: JEFF MARLOW

CONTRACTOR INFORMATION:

LEXINGTON HOMES, INC.
1300 N KIMPS CT
GREEN BAY, WI 54313

(920) 655-1961

CONTACT: CARL AMBROSIUS

UTILITY INFORMATION:

UTILITIES PRESENT:
PLEASANT PRAIRIE UTILITY DEPARTMENT, AT & T, TIME WARNER CABLE AND WE ENERGIES.

UTILITIES SHOWN ON THIS MAP ARE BASED ON LOCATES FROM:

DIGGER'S HOTLINE TICKET NUMBERS 20160905163, 20160905172 AND 20160905177, DATED 03/07/2016, VISIBLE OBSERVATION AND RECORD UTILITY PLAN DOCUMENTS. UTILITY LINE LOCATIONS SHOULD BE VERIFIED PRIOR TO ANY DIGGING. THIS SITE MAY CONTAIN BURIED UTILITIES NOT IDENTIFIED ON THIS MAP.

DIGGERS HOTLINE = 1-800-242-8511

WATER/SANITARY/STORM
PLEASANT PRAIRIE UTILITY DEPT
9915 39TH AV
PLEASANT PRAIRIE, WI 53158

(262) 694-1400

GAS & ELECTRIC:
WE ENERGIES
231 W MICHIGAN ST
MILWAUKEE, WI 53203

(414) 221-2345

TELECOMMUNICATIONS:
AT & T / SBC
9800 76TH ST SUITE 104
PLEASANT PRAIRIE, WI 53158

(262) 697-7100

TELECOMMUNICATIONS:
TIME WARNER CABLE
1320 NORTH MARTIN LUTHER KING JR DR
MILWAUKEE, WI 53212

(414) 277-4111

LEGEND

- FIRE HYDRANT
- WATER VALVE/CURB STOP
- WATER MANHOLE
- REDUCER/INCREASER
- SANITARY MANHOLE
- AIR RELIEF MANHOLE
- STORM MANHOLE
- OPEN STORM MANHOLE
- STORM INLET
- STORM INLET MANHOLE
- TANK COVER
- SOIL BORING
- POST
- IRON PIPE/ROD
- PK NAIL
- POWER POLE
- POWER POLE W/GUY WIRE
- LIGHT POLE
- TRAFFIC SIGNAL POLE
- ELECTRIC MANHOLE
- ELECTRIC METER
- TELEPHONE MANHOLE
- TELEPHONE PEDESTAL
- CABLE TV MANHOLE
- CABLE TV PEDESTAL
- GAS VALVE
- GAS METER
- MAILBOX
- SIGN
- BOLLARD
- DECIDUOUS TREE
- CONIFEROUS TREE
- BUSH
- RIP RAP
- CULVERT
- CONCRETE
- WETLANDS
- HANDICAP PARKING
- EDGE OF ASPHALT
- EDGE OF GRAVEL
- CURB & GUTTER
- CONTOUR LINE
- FENCE
- TREE/SHRUB TO BE REMOVED
- SANITARY SEWER (SIZE NOTED)
- FORCEMAIN (SIZE NOTED)
- STORM SEWER (SIZE NOTED)
- WATERMAIN (SIZE NOTED)
- GAS LINE
- UNDERGROUND TELEPHONE LINE
- UNDERGROUND ELECTRIC LINE
- CABLE TV LINE
- FIBER OPTIC LINE
- R/W LINE
- PROPERTY LINE
- EASEMENT LINE
- BUILDING SETBACK LINE
- SECTION LINE

		WM	WATERMAIN		
		HYD.	HYDRANT		
GR.	GRAVEL	SAN	SANITARY SEWER	B-B	BACK TO BACK (OF CURB)
BIT.	BITUMINOUS	ST	STORM SEWER	F-F	FACE TO FACE (OF CURB)
ASPH.	ASPHALT	MH	MANHOLE	R/W	RIGHT OF WAY
CONC.	CONCRETE	CB	CATCH BASIN	T/C	TOP OF CURB
SW	SIDEWALK	TELE	TELEPHONE	F/L	FLOW LINE
BLDG	BUILDING	ELEC	ELECTRIC	C/L	CENTERLINE
HSE	HOUSE	TV	TELEVISION	R	RADIUS
PED	PEDESTAL	EX	EXISTING	INV.	INVERT
PP	POWER POLE	PR	PROPOSED	CMP	CORRUGATED METAL PIPE
LP	LIGHT POLE	EOR	END OF RADIUS	RCP	REINFORCED CONCRETE PIPE
BM	BENCH MARK	BOC	BACK OF CURB	CULV.	CULVERT

Curve Table

Curve #	Delta	Radius	Length	Chord Direction	Chord Length	Tangent Bearing	Second Tangent Bearing
C1	22°57'04"	150.00'	60.09'	N77°04'30"W	59.68'	N65°35'58"W	N88° 33' 02"W
C2	23°56'12"	877.00'	366.39'	S12°25'55"W	363.73'	S24°24'02"W	S00° 27' 49"W
C3	37°18'52"	705.53'	459.48'	S72°41'07"E	451.41'	S54°01'41"E	N88° 39' 27"E
C4	34°30'07"	326.43'	196.57'	N18°42'01"E	193.61'	N35°57'05"E	N01° 26' 58"E

DIGGERS HOTLINE
Dial 811 or (800) 242-8511
www.DiggersHotline.com

TO OBTAIN LOCATION OF PARTICIPANTS UNDERGROUND FACILITIES BEFORE YOU DIG IN WISCONSIN

WIS. STATUTE 182.0175 (1974) REQUIRES MIN. OF 3 WORK DAYS NOTICE BEFORE YOU EXCAVATE.

NORTH

0' 30' 60'
SCALE IN FEET

NO.	DATE	APPROV.	REVISION	NO.	DATE	APPROV.	REVISION

DRAWN LLP
CHECKED JGS
DESIGNED AJB

SKYLINE TOWERS
A DEVELOPMENT BY LEXINGTON HOMES
VILLAGE OF PLEASANT PRAIRIE
KENOSHA COUNTY, WISCONSIN

EXISTING SITE CONDITIONS

DATE 03/2016
FILE 4329079T
JOB NO. 4329079

Robert E. Lee & Associates, Inc.
ENGINEERING, SURVEYING, ENVIRONMENTAL SERVICES
1250 CENTENNIAL CENTRE BOULEVARD HOBART, WI 54155
920-662-9641 www.releeinc.com
Celebrating 60 Years of Excellence

SHEET NO. 2

File: R:\4329\4329\4329079\dwg\4329079t.dwg
Plot Date: Mar 23, 2016 - 8:43am
LAYOUT: EX SITE

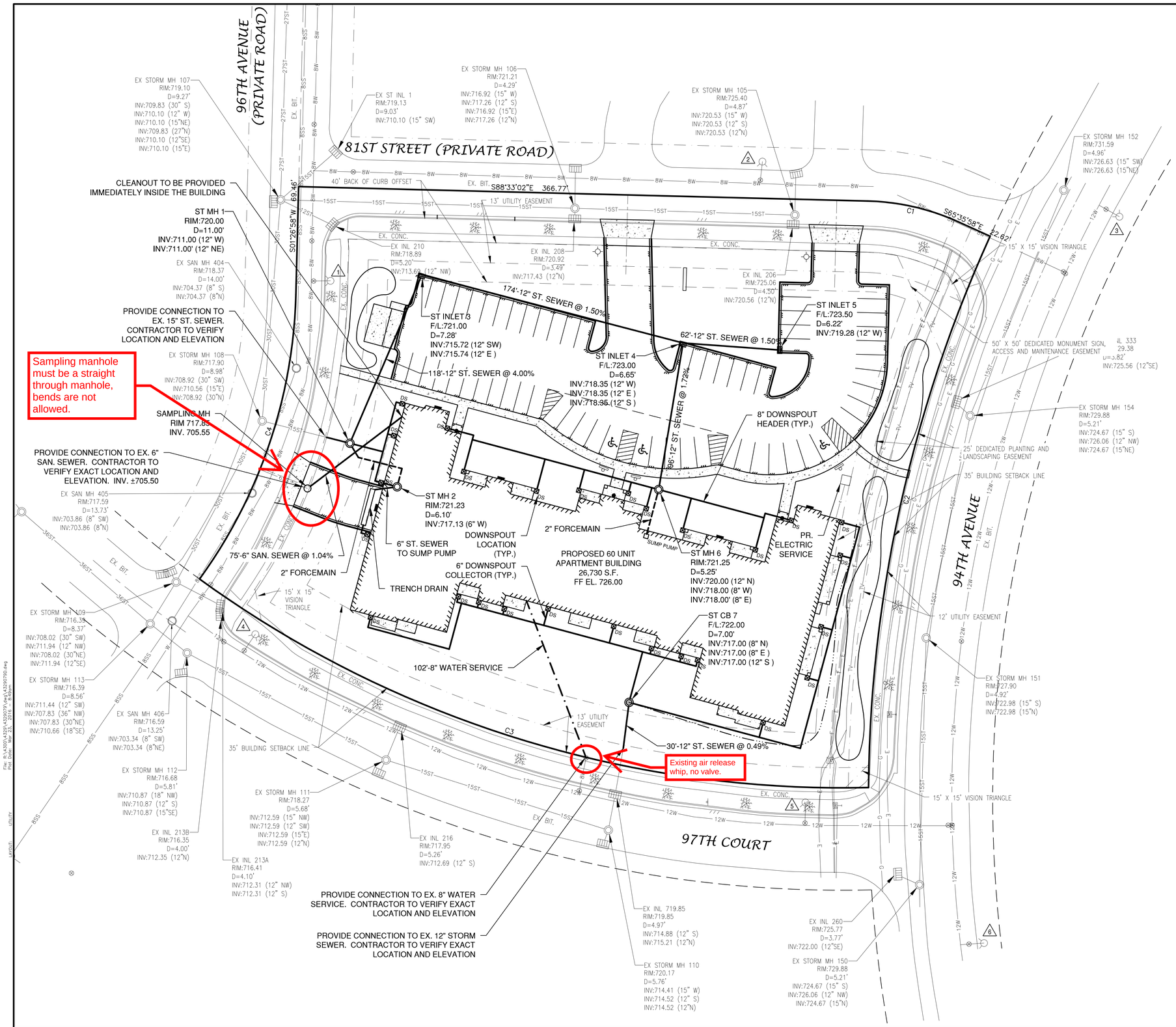

NOTE

1. A MINIMUM OF 6.5 FEET OF COVER SHALL BE MAINTAINED OVER ALL WATERMAIN.
2. SANITARY SEWER, WATERMAIN AND STORM SEWER SHALL BE CONSTRUCTED IN ACCORDANCE WITH THE STANDARD SPECIFICATIONS FOR SEWER AND WATER CONSTRUCTION IN WISCONSIN AND ADMINISTRATIVE CODE CHAPTERS COMM 81-87.
3. FIELD VERIFY LOCATION OF EXISTING UTILITIES. IF EXISTING LOCATIONS DIFFER FROM WHAT IS INDICATED ON THE PLANS, **CONTACT ENGINEER,** PRIOR TO CONTINUED WORK.
4. ALL SANITARY SEWER, STORM SEWER AND WATER SERVICES / MAINS SHALL BE PROVIDED WITH TRACER WIRE OR OTHER METHOD TO BE LOCATED.

LEGEND

- PROPOSED SANITARY SEWER
- 8SS — EXISTING SANITARY SEWER (SIZE NOTED)
- PROPOSED STORM SEWER
- 10ST — EXISTING STORM SEWER (SIZE NOTED)
- PROPOSED WATERMAIN
- 6W — EXISTING WATERMAIN (SIZE NOTED)

PROPOSED	EXISTING	
		FIRE HYDRANT
		WATER VALVE/CURB STOP
		WATER MANHOLE
		REDUCER/INCREASER
		SANITARY MANHOLE
		LIFT STATION
		TRACER WIRE SIGNAL CONNECTION BOX
		CLEANOUT
		STORM MANHOLE
		STORM CATCH BASIN
		STORM INLET
		STORM INLET MANHOLE
		YARD DRAIN
		STANDPIPE
		ROOF DOWNSPOUT

BENCHMARK	BENCHMARK ESTABLISHED BY: ROBERT E. LEE & ASSOCIATES, INC. **FIELD VERIFY BENCHMARKS FOR ACCURACY.**	
NO.	DESCRIPTION	EL.
1	ARROW ON TOP FLANGE OF FIRE HYDRANT	720.73
2	ARROW ON TOP FLANGE OF FIRE HYDRANT	727.46
3	SOUTH BOLT ON TOP FLANGE OF FIRE HYDRANT	734.86
4	ARROW ON TOP FLANGE OF FIRE HYDRANT	718.73
5	ARROW ON TOP FLANGE OF FIRE HYDRANT	725.95
6	SOUTH BOLT ON TOP FLANGE OF FIRE HYDRANT	727.64

NORTH

0' 30' 60'

SCALE IN FEET

NO.	DATE	APPROV.	REVISION	NO.	DATE	APPROV.	REVISION

DRAWN LLF
CHECKED JGS
DESIGNED AJB

SKYLINE TOWERS
A DEVELOPMENT BY LEXINGTON HOMES
VILLAGE OF PLEASANT PRAIRIE
KENOSHA COUNTY, WISCONSIN

UTILITY PLAN

DATE 03/2016
FILE 4329079D
JOB NO. 4329079

Robert E. Lee & Associates, Inc.
ENGINEERING, SURVEYING, ENVIRONMENTAL SERVICES
1250 CENTENNIAL CENTRE BOULEVARD HOBART, WI 54155
920-662-9641 www.releeinc.com
Celebrating 60 Years of Excellence

SHEET NO. 4

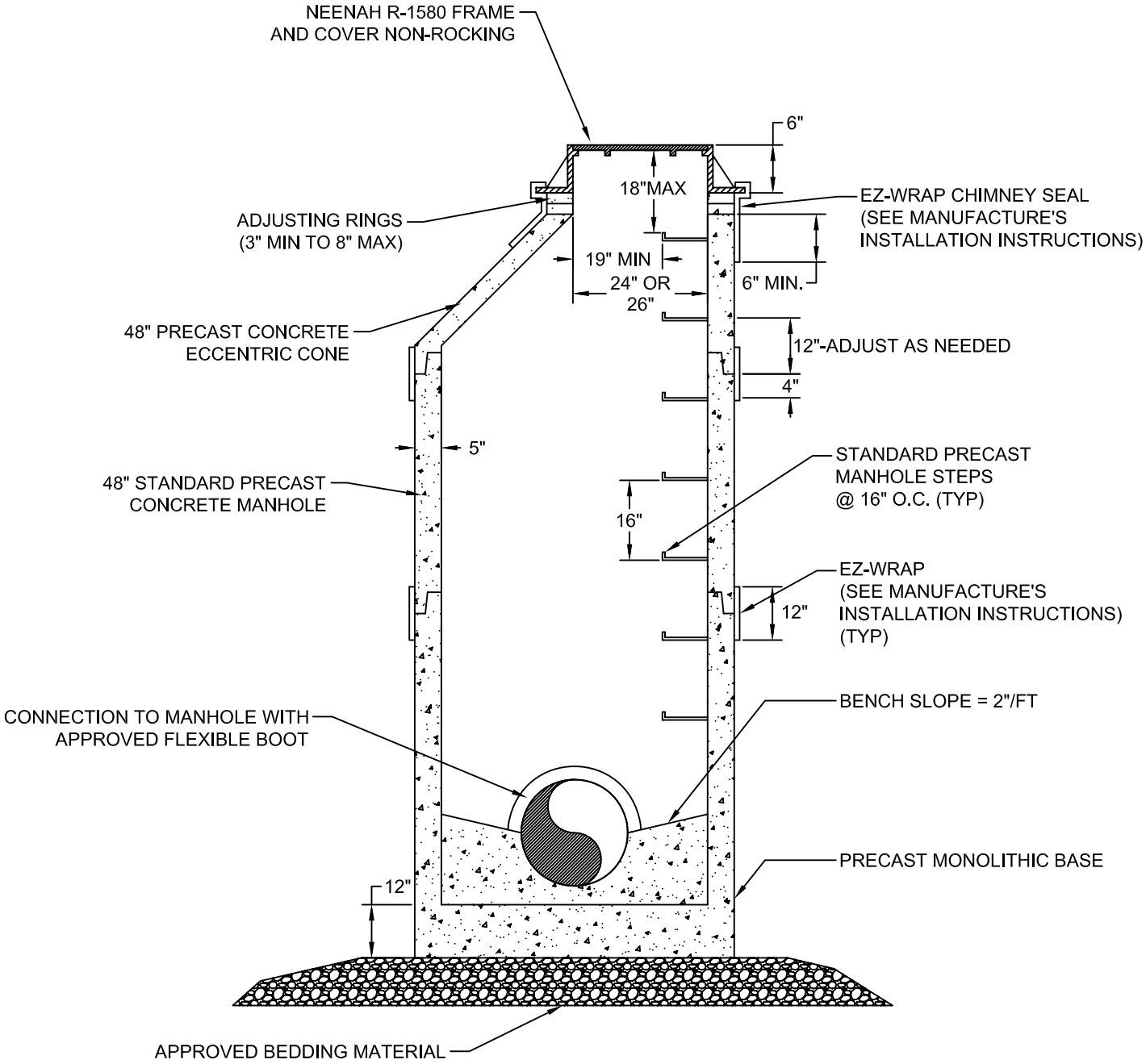

NOTE: REFER TO VILLAGE STANDARD SPECIFICATIONS FOR SANITARY SEWER.

SCALE: NTS

VILLAGE OF PLEASANT PRAIRIE	STANDARD SANITARY MANHOLE	DETAIL: SAN - 1
	CREATED: 11-21-12	APPROVED BY: MATT FINEOUR
	REVISED: 11-10-15	

Wisconsin Award for Municipal Excellence
Pleasant Prairie
Golden Cluster

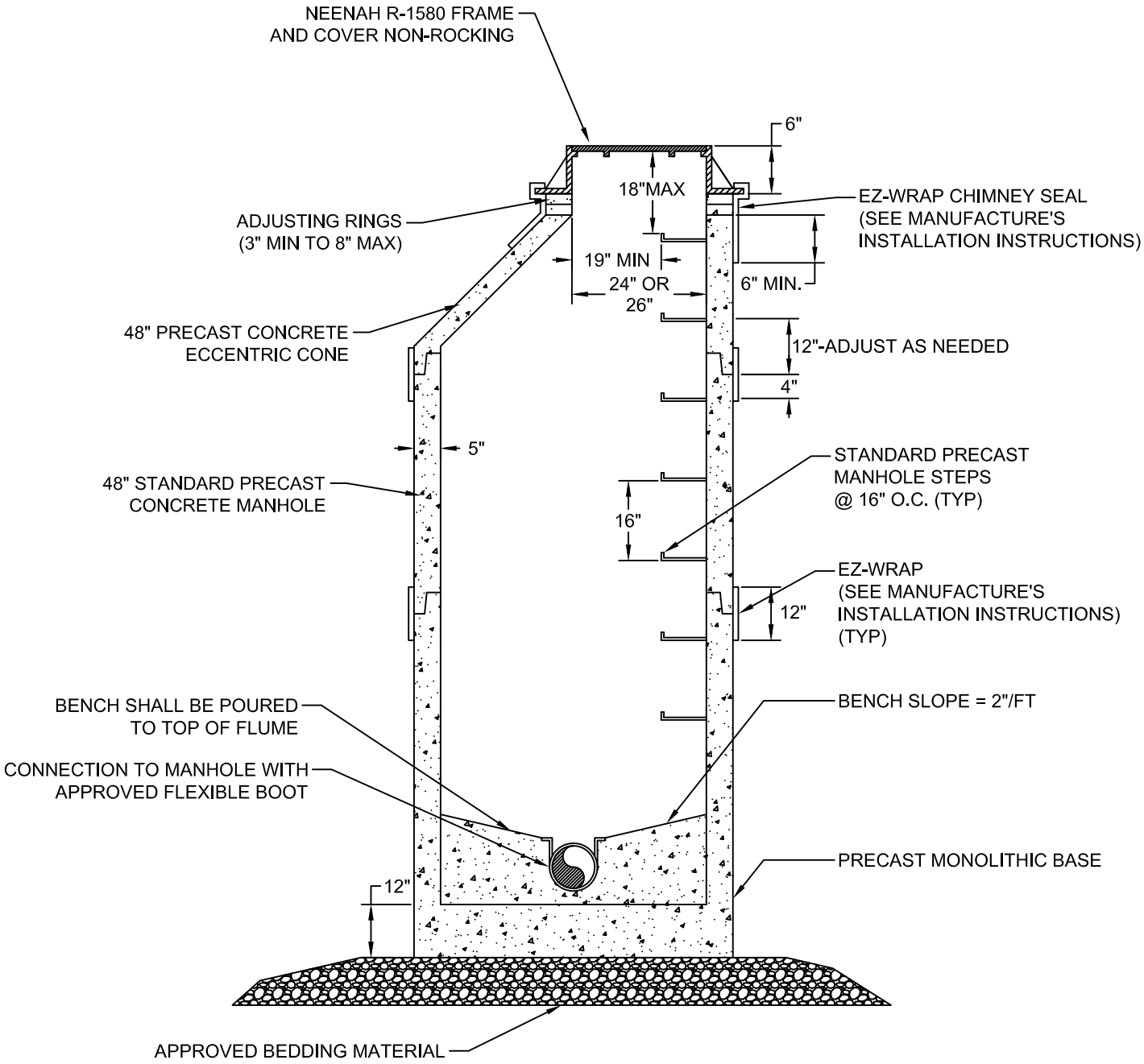

NOTES:

1. STANDARD SAMPLING MANHOLE SHALL HAVE A PALMER-BOWLUS FLUME WITH INTEGRAL APPROACH INSTALLED.
2. VILLAGE OF PLEASANT PRAIRIE DPW SHALL BE CONTACTED FOR FINAL INSPECTION OF SAMPLING MANHOLES.
3. SEE DETAIL SAN-2A AND SAN-2B FOR PALMER-BOWLUS FLUME DETAILS.
4. REFER TO VILLAGE STANDARD SPECIFICATIONS FOR SANITARY MANHOLES.

SCALE: NTS

VILLAGE OF PLEASANT PRAIRIE	STANDARD SAMPLING MANHOLE	DETAIL: SAN - 2
	CREATED: 11-21-12	APPROVED BY: MATT FINEOUR
	REVISED: 11-10-15	

Wisconsin Award for Municipal Excellence — Pleasant Prairie — Golden Cluster

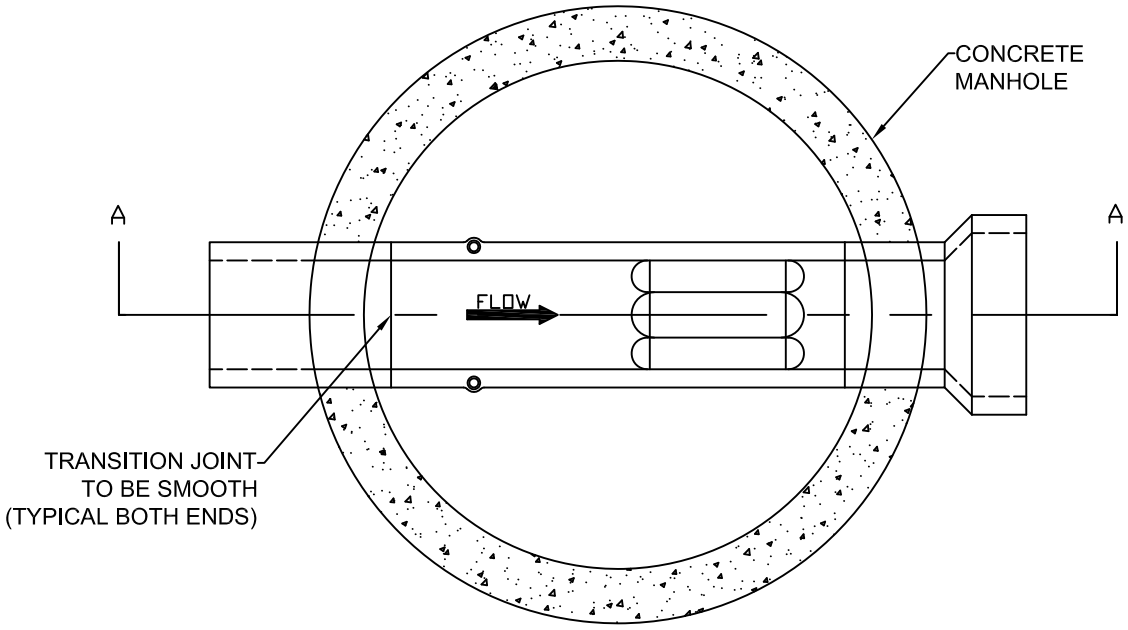

TOP VIEW OF MANHOLE WITH FLUME

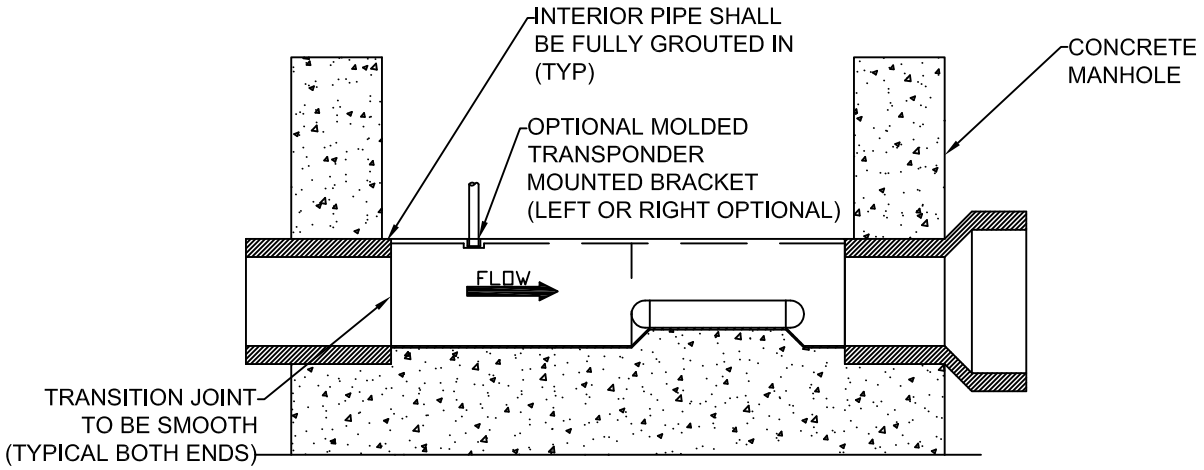

SECTION A - A ENLARGED

NOTE:

1. FLUME SHALL BE SET LEVEL INSIDE THE MANHOLE FOR PROPER TESTING PROCEDURES.

2. REFER TO VILLAGE STANDARD SPECIFICATIONS FOR SANITARY SEWER.

SCALE: NTS

VILLAGE OF PLEASANT PRAIRIE	PALMER-BOWLUS FLUME DETAIL (1 OF 2)	DETAIL: SAN - 2A
	CREATED: 11-21-12	APPROVED BY: MATT FINEOUR
	REVISED: 11-18-15	

Wisconsin Award for Municipal Excellence
Pleasant Prairie
Golden Cluster

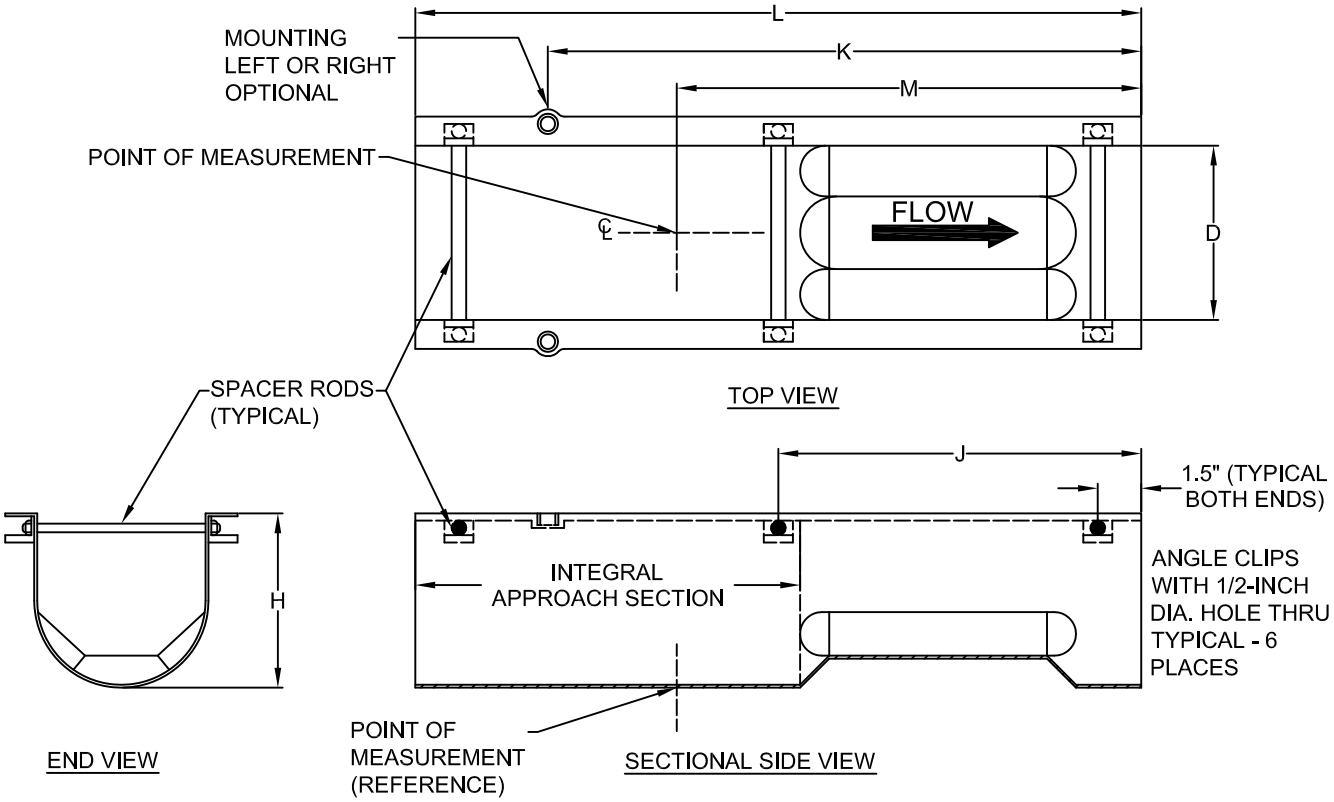

DIMENSIONS TABLE

PIPE SIZE	D	H	M	K	J	L
4	4	6	11	15 7/16	6 1/2	17
6	6	8	16	20 7/16	12 1/2	25
8	8	10	21	25 7/16	16 1/2	33
10	10	12	26	30 7/16	20 1/2	41
12	12	14	31	35 7/16	24 1/2	49
15	15	17	38 1/2	42 15/16	30 1/2	61
18	18	20	46	50 7/16	36 1/2	73
21	21	23	53 1/2	57 15/16	42 1/2	85
24	24	26	61	65 7/16	48 1/2	97
27	27	29	68 1/2	72 15/16	54 1/2	109
30	30	32	76	80 7/16	60 1/2	121

NOTES:

1. DIMENSIONS ARE IN INCHES, UNLESS OTHERWISE SPECIFIED.

2. DIMENSIONS PROVIDED FOR REFERENCE ONLY.

SCALE: NTS

VILLAGE OF PLEASANT PRAIRIE

PALMER-BOWLUS FLUME DETAIL (2 OF 2)

DETAIL: SAN - 2B

CREATED: 11-21-12

REVISED: 11-16-15

APPROVED BY: MATT FINEOUR

Wisconsin Award for Municipal Excellence
Pleasant Prairie
Golden Cluster

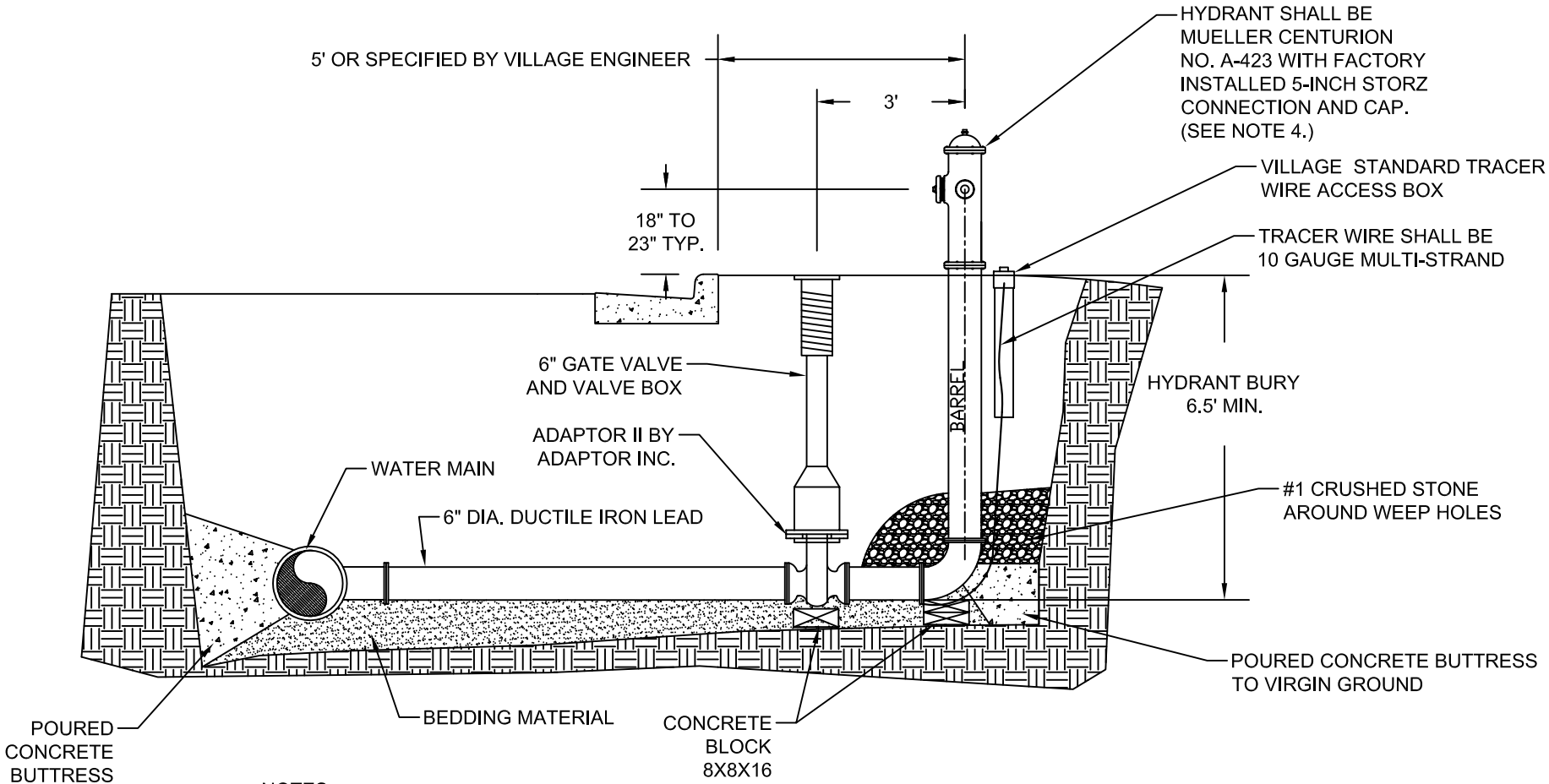

NOTES:

1. MECHANICAL JOINTS FROM TEE TO VALVE AND FROM VALVE TO HYDRANT SHALL BE RESTRAINED WITH MEGALUGS AND STAINLESS STEEL BOLTS.
2. ALL BOLTS SHALL BE STAINLESS STEEL BOLTS.
3. REFER TO VILLAGE STANDARD SPECIFICATIONS FOR WATER MAIN CONSTRUCTION
4. HYDRANT SPECIFICATIONS - 2 EACH 2-1/2 INCH NST NOZZLE, 1 FACTORY INSTALLED 5-INCH STORZ CONNECTION AND CAP MANUFACTURED BY MUELLER.
5. PAINT SPECIFICATION - PLEASE REFER TO VS-0400 OF THE VILLAGE CONSTRUCTION SPECIFICATIONS.
6. HYDRANT EXTENSIONS ARE NOT PERMITTED.

SCALE: NTS

VILLAGE OF PLEASANT PRAIRIE

STANDARD HYDRANT ASSEMBLY

DETAIL: W - 1

CREATED: 11-26-12

REVISED: 11-16-15

APPROVED BY: MATT FINEOUR

Wisconsin Award for Municipal Excellence
Pleasant Prairie
Golden Cluster

NOTE:
-SYSTEM SIZING SHALL BE COMPLETED BY A FIRE SUPPRESSION ENGINEER AND APPROVED OF BY THE VILLAGE OF PLEASANT PRAIRIE FIRE DEPARTMENT.
-SYSTEM INSTALLATION MUST BE CONSTRUCTED UNDER THE ONSITE SUPERVISION OF A LICENSED SPRINKLER FITTER.

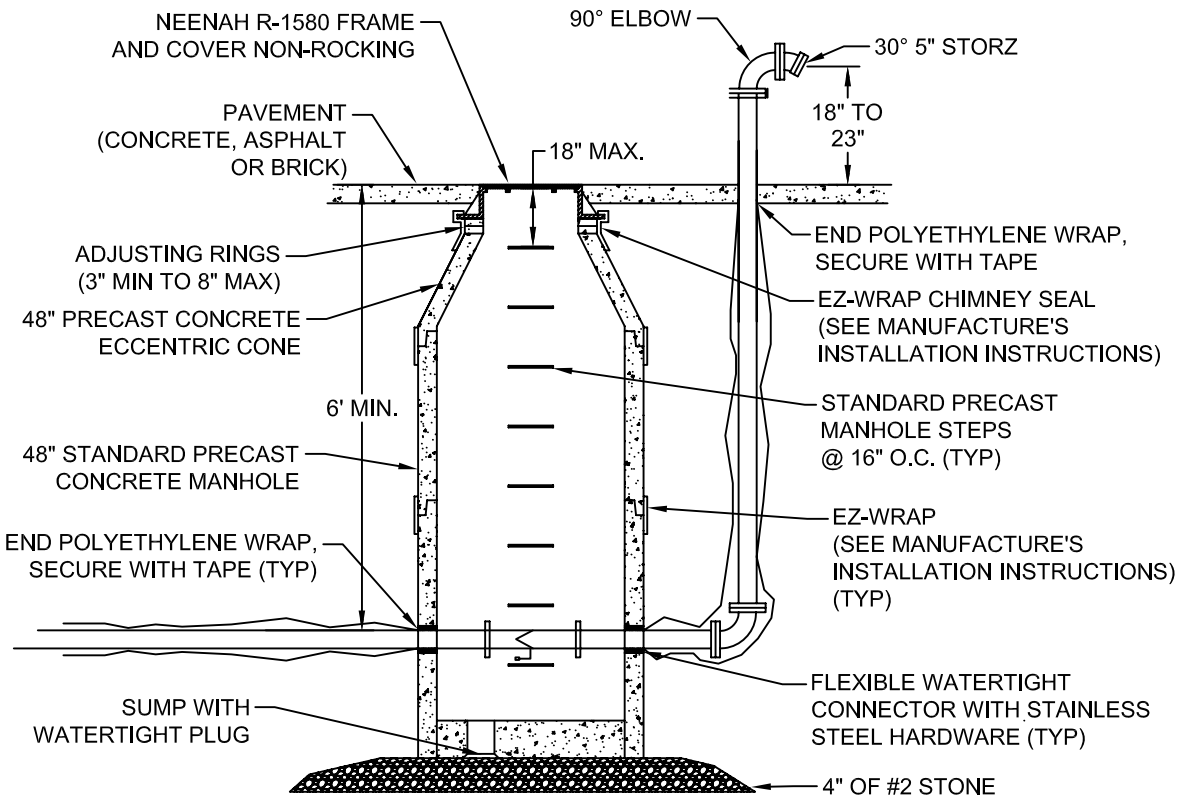

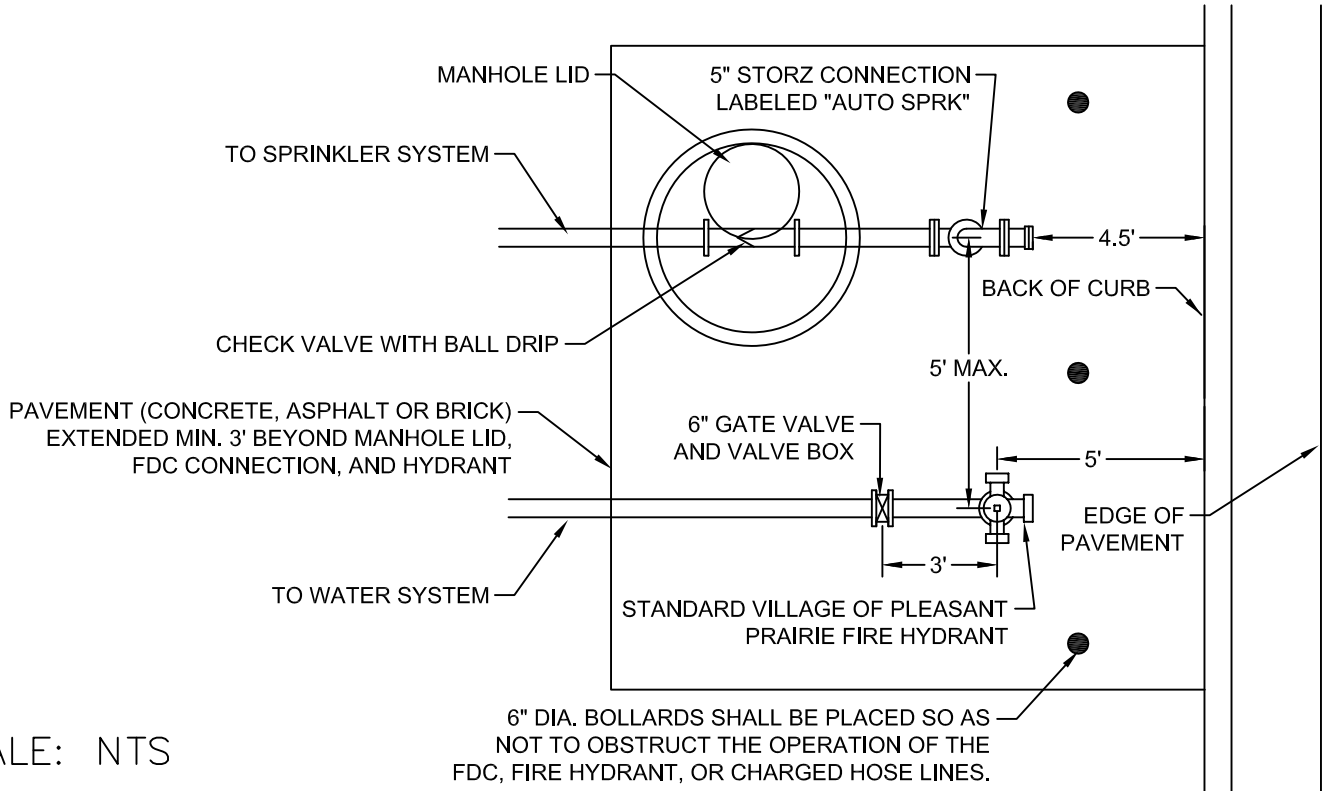

SCALE: NTS

VILLAGE OF PLEASANT PRAIRIE	**PUMPER PAD FDC DETAIL**	**DETAIL: FD - 1**
CREATED: 4-16-13	APPROVED BY: D. McELMURY	Wisconsin Award for Municipal Excellence — Pleasant Prairie — Golden Cluster
REVISED: 3-2-16		

NOTE:
1. DAMAGED CURB / GUTTER SECTIONS SHALL BE REMOVED TO THE NEAREST JOINT.
2. CURB AND GUTTER CONSTRUCTED ADJACENT TO EXISTING CURB AND GUTTER SHALL BE INSTALLED USING TWO (2) NO.4 (1/2-INCH), 18-INCH LONG TIE BARS, EVENLY SPACED, DRIVEN 9-INCHES INTO THE EXISTING CURB AND GUTTER.
3. WHERE ADJACENT PAVEMENT SECTION CONTAINS CONCRETE THE GUTTER THICKNESS SHALL EXTEND TO THE BOTTOM OF THE ADJACENT CONCRETE PAVEMENT.

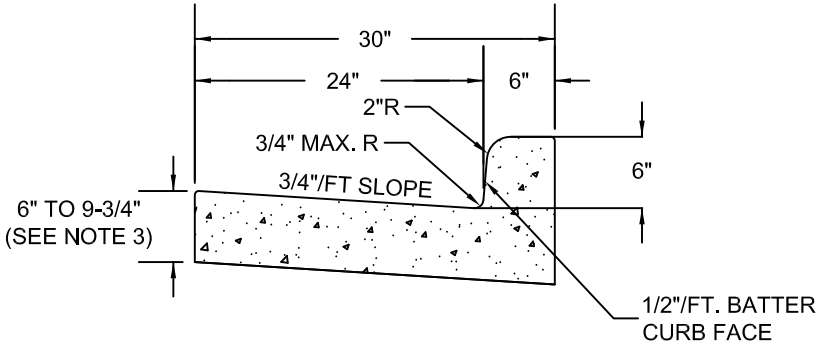

30" VERTICAL FACE CURB AND GUTTER

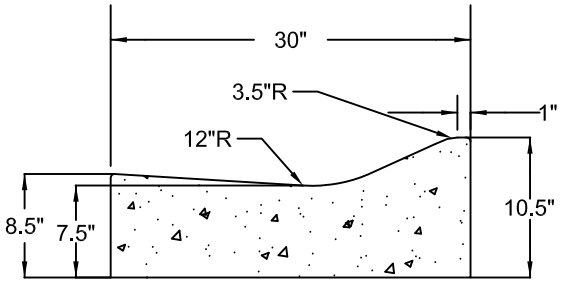

30" MOUNTABLE CURB AND GUTTER

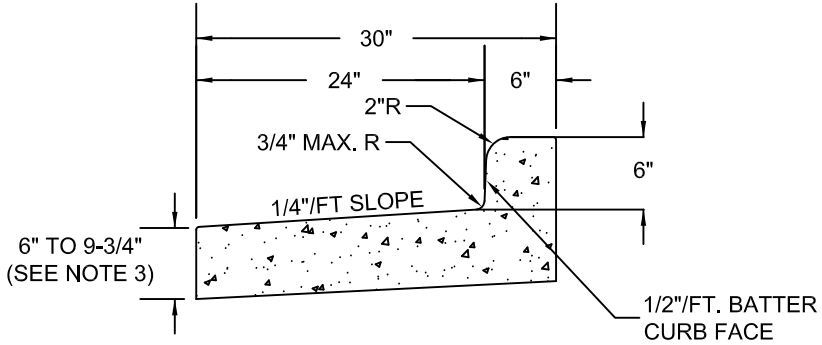

30" VERTICAL FACE CURB AND GUTTER
(REVERSE SLOPE GUTTER)

SCALE: NTS

VILLAGE OF PLEASANT PRAIRIE	STANDARD CURB & GUTTER DETAILS	DETAIL: RD - 9
	CREATED: 2-7-14	APPROVED BY: MATT FINEOUR
	REVISED: 12-1-15	

Wisconsin Award for Municipal Excellence
Pleasant Prairie
Golden Cluster

Office of the Building Inspection Superintendent
Sandro Perez

Village Staff Memorandum

To: Jean Werbie-Harris, Community Development Director

From: Sandro Perez, Building Inspection Superintendent

Subject: Skyline Towers Site & Op's Plan Review

Date: May 19, 2016

---

1. Building Inspection Department information:
   Hours: Mon-Fri, 8am-5pm.
   Phone# 262-694-9304
   Email: buildinginspection@plprairiewi.com

2. Permit applications can be found online at pleasantprairieonline.com.

3. Inspections are performed Mon- Fri 9am-4pm except electrical inspections; those are only Tue & Thu mornings. 48hr notice is required to schedule an inspection. Please note you must call and speak with a Building Inspection Department representative a voicemail or email will not constitute an inspection please plan accordingly. Final occupancy inspections require coordination with multiple departments and staff members there for a minimum of 72 hour notice is required. Any re-inspection fees due must be paid prior to scheduling a re-inspection.

4. All contractors requiring permits shall not commence work until permit issuance (including low voltage contractors). We have 10 business days to review and issue permits please plan accordingly. If there are any questions on which contractors need a permit please contact Building Inspection Department.

5. Electrical plans are no longer reviewed by the State, however the Building Inspection Department will require a complete set of electrical plans prior to issuance of electrical permit. Please submit emergency egress lighting plan with photometrics and energy compliance worksheets form SBD 10512 to Building Inspection Department prior to issuance of Electrical Permit.

6. Combination water mains will need plan review and approval by the Fire Department prior to issuance of Exterior Plumbing Permit. Contact Chief Dough McElmury at 262-694-5600 for submittal requirements. All underground inspections will be performed by the Building Inspection Department. All system function inspections will be performed by the Fire Department.

7. Fire alarm systems require plan review and approval by the Fire Department prior to the Building Inspection Department issuing a Low Voltage Fire Alarm Permit. Contact Chief Dough McElmury at 262-694-5600 for submittal requirements. Inspections will be required by both the Fire Department and Building Inspection Department.

8. Erosion Control Standards must be adhered to at all times during construction. The Building Inspection Department will not perform any inspection if the erosion control measures are non-compliant.

9. Any tradesmen requiring state license will be "carded" on the jobsite for compliance.

10. We inspect to the 2009 IBC, IEBC, IMC, IECC, IFGC, 2003 ANSI A117.1, 2011 NEC and WI. Plumbing code SPS 381-386.

11. Keep jobsite clean and safe, inspectors will not perform inspection if there is a safety hazard in the area of their inspection.

12. A $50 re-inspection fee will be charged if you are not ready for your inspection.

13. All exterior lighting is recommended to be LED 5000K color temperature and "Dark Sky" compliant.

VILLAGE OF PLEASANT PRAIRIE

Wisconsin Award for Municipal Excellence

RECEIVED

MAR 23 2016

PLEASANT PRAIRIE

Filed _____ 20__ Published _____ 20__

Public Hearing _____ 20__ _____ 20__

Fee Paid _____ 20__ Approved _____ 20__

Notices Mailed _____ 20__ Denied _____ 20__

VILLAGE OF PLEASANT PRAIRIE, WISCONSIN
ZONING MAP AND TEXT AMENDMENT APPLICATION

To: Village Plan Commission & Village Board of Trustees of the Village of Pleasant Prairie:

I, (We), the undersigned owner(s)/agent do hereby petition the Village Board to amend the Village of Pleasant Prairie Zoning Map as hereinafter requested.

It is petitioned that the following described property be rezoned from the present R-11 MULTI-FAMILY RESIDENTIAL DISTRICT District(s) to P.U.D District(s). The property petitioned to be rezoned is located at: NW CORNER OF 94TH AVE & 97TH CT (address) and is legally described as follows: - SEE ATTACHED

Tax Parcel Number(s): 91-4-122-084-0413

The proposed use for this property is: MULTI-FAMILY RESIDENTIAL SKYLINE TOWERS

Petitioner's interest in the requested rezoning: ACCOMODATE PROPOSED 60 UNIT STRUCTURE

Compatibility with adjacent land uses: CONSISTENT W/ MULTI-TENANT BUILDINGS IN THE IMMEDIATE AREA

I (We) are also requesting a Zoning Text Amendment to amend Section 420-116.R-11 of the Village Zoning Ordinance.

I (We), have contacted the Community Development Department to arrange a pre-application meeting to discuss the proposed request to determine additional information that may be needed for this request.

I, (We), hereby certify that all the above statements and attachments submitted herewith are true and correct to the best of my knowledge.

PROPERTY OWNER:

Print Name: SKYLINE TOWERS, LLC - JEFF MARLOW

Signature: CARL AMBROSIUS FOR:

Address: 1300 N KIMPS CT

GREEN BAY (City) WI (State) 54313 (Zip)

Phone: (920) 662-1611

Fax: (920) 662-8204

Email: jmarlow@lexingtonneighborhoods.com

Date 3/23/16

OWNER'S AGENT:

Print Name: ROBERT E LEE & ASSOC., INC

Signature: JARED G SCHMIDT

Address: 1250 CENTENNIAL CENTRE BLVD

HOBART (City) WI (State) 54155 (Zip)

Phone: (920) 662-9641

Fax: (920) 662-9141

Email: jschmidt@releeinc.com

Date: 3/23/16

LEGAL DESCRIPTION

All of Lot 2, Volume 30 of Certified Survey Maps, Page 5348, Map Number 5348, Document Number 1708704, being part of the Northeast ¼ of the Southeast ¼, Section 18, T21N, R17E, in the Town of Grand Chute, Outagamie County, Wisconsin.

PUD Supplemental Information

VILLAGE OF PLEASANT PRAIRIE
SITE AND OPERATIONAL PLAN
AND CONDITIONAL USE PERMIT ZONING APPLICATION

USE THIS FORM FOR:
Tenants/Use changes proposing to occupy 50% or more of an existing commercial/industrial building.

To construct a **new** or addition to principal or accessory structure.

Use requires a Conditional Use Permit.

FOR OFFICE USE ONLY
Application Filed on _____ 20__
Preliminary Determination of Completeness on: _____ 20__
Revised Plans Submitted: _____ 20__
☐ Public Hearing Required: Hearing Date: _____, 20__ Published on: _____ and _____, 20__ Notices sent on: _____, 20__
Approved by ☐ Plan Commission on _____ 20__ ☐ Zoning Administrator on _____ 20__
Denied by ☐ Plan Commission on _____ 20__ ☐ Zoning Administrator on _____ 20__

SECTION 1: GENERAL INFORMATION

NAME OF BUSINESS: SKYLINE TOWERS

SITE ADDRESS: NW CORNER OF 97TH CT & 94TH AVE

BRIEF PROJECT DESCRIPTION: THE PROJECT INCLUDES THE CONSTRUCTION OF A 60-UNIT MULTI-FAMILY APARTMENT BUILDING

PROPOSED NUMBER OF FULL TIME EMPLOYEES: 2

PROPOSED NUMBER OF PART-TIME EMPLOYEES: _____

SITE SIZE: 123,229 **sq. ft.** 2.83 **acres**

PROPOSED BUILDING SIZE: 26,730 **sq.ft. HEIGHT:** 50 **ft.**

PROPOSED ADDITION SIZE: N/A **sq.ft. HEIGHT:** N/A **ft.**

LEGAL DESCRIPTION: SEE ATTACHED

TAX PARCEL NUMBER(S) : 91-4-122-084-0413

CURRENT ZONING CLASSIFICATION(S) OF THE PROPERTY: _____

1. **Is a zoning map amendment proposed with this project?** ☒ **Yes** ☐ **No**
   - **If yes**, proposed Zoning Classification(s): P.U.D
2. **Is a zoning text amendment proposed with this project?** ☒ **Yes** ☐ **No**
   - **If yes**, provide a copy of the proposed text amendment with this application

3. **If property is zoned M-1 or M-2, indicate the Occupancy Type pursuant to the Use and Occupancy Classification specified in Chapter 3 of the 2006 International Building Code (2006 IBC). Include all that apply and associated square footage for each classification:**

- ❑ **Factory Group F-1 (Moderate-hazard)** _____ sq ft
- ❑ **Factory Group F-2 (Low-hazard)** _____ sq ft
- ❑ **Storage Group S-1 (Moderate-hazard)** _____ sq ft
- ❑ **Storage Group S-2 (Low-hazard)** _____ sq ft
- ❑ **Business Group B** _____ sq ft
- ❑ **High-Hazard Group H*** _____ sq ft
- ❑ **Other** _____ _____ sq ft
- ❑ **Other** _____ _____ sq ft

If Use and Occupancy Classification is High-Hazard Group H please provide a detailed written narrative that explains the specific use, quantity of storage and handling of the high hazard materials along with appropriate MSSD sheets with this application.

PUBLIC SERVICES:

1. **Is the property serviced by Public Sanitary Sewer?** ☒ **YES** ❑ **NO**
   - **If no,** the closest public sewer is located at _____
2. **Is the property serviced by Public Water?** ☒ **YES** ❑ **NO**
   - **If no,** the closest public water is located at _____
3. **Maximum number of gallons/minute of water expected to be used per day is:** 167 GPM

THIS APPLICATION IS FOR A: **(check one)**

- ❑ **Preliminary Site and Operational Plan:** An applicant may apply for preliminary site and operational plan approval in connection with an erosion control permit application for early mass grading, or in connection with an early foundation permit, or for other good cause shown
- ☒ **New Site and Operational Plan**
- ❑ **Amendment to an existing Site and Operational Plan**
  - **Date of initial site and operational plan approval:** _____
  - **Date of each approved amendment:** _____

SECTION 2: EXISTING USES AND BUILDINGS ON THE SITE

Are there any existing buildings on the site? ❑ **YES** ☒ **NO**

- **If yes,** provide an attachment that explains the current uses on the property and current uses in each building and if the use(s) is proposed to continue; and the gross floor area and height of each building.
- **If no,** what is the current use of the property? Open Space

SECTION 3: PHOTOGRAPHS

Standard-sized photographs (not Polaroid) showing all aspects of the site (e.g. locations of proposed improvements, bodies of navigable water, wetlands, wooded areas, etc.) and of the exterior of structures or other site improvements, together with a statement regarding each photograph, which includes the date the photograph was taken, the location from which it was taken, the direction in which the camera was pointed, and a description of what is shown in the photograph. With respect to all existing signs, the applicant shall file photographs of all existing signs and shall specify in the written statement accompanying each such photograph and show the dimensions of such sign. Digital images are acceptable.

SECTION 4: CONDITIONAL USE

1. **Does the proposed project require a Conditional Use Permit?** ☐ **YES** ☒ **NO**
   - **If no** then skip to Section 5.
   - **If yes**, then continue with this Section.
2. **Are you amending an existing Conditional Use Permit?** ☐ **YES** ☒ **NO**
   - **If yes**, provide a copy of the Conditional Use Grant Document you are proposing to amend.
   - **If no**, continue with this Section.
3. If you answered **YES** to either question 1 or 2 above then this application shall include information as to how the proposed project will not impair an adequate supply of light and air to adjacent properties; increase danger of fire; cause traffic congestion or traffic circulation problems; create storm water flooding or drainage; create obnoxious odors, problems or otherwise endanger the public health, safety or welfare; will not hinder, harm or distract the provision of public services; and that the proposed project is not inherently inconsistent with either the district in which it is located or adjoining districts or neighborhoods as required pursuant to the Village Zoning Ordinance.

SECTION 5: NON-CONFORMING USE

1. **Is any use on the site a nonconforming use?** ☐ **YES** ☒ **NO**
   - **If no**, then skip to Section 7.
   - **If yes**, then continue with this section.
2. If you answered **YES** to question 1 above, prima facie proof of each element of legal nonconforming use status shall be submitted to the Village with this application (i.e. that the nonconforming use was legal in its inception, that the use was active and actual and not merely casual, occasional, incidental or accessory when it became nonconforming, that the use has been continuous with no gap of 12 or more consecutive months since it became nonconforming, that no building or structure housing the nonconforming use has been structurally repaired or altered to the extent of fifty (50) percent or more of its assessed value since the use became nonconforming, and that the use has not been changed in nature or physically extended or expanded since becoming nonconforming).

SECTION 6: PERFORMANCE STANDARDS

Pursuant to the Village Zoning Ordinance, any application for a permit under this ordinance or any use subject to the regulations and standards set forth in the Village Zoning Ordinance shall be accompanied by a sworn statement by the owner of the subject property that said property and use will be operated in accordance with the performance standards set forth in Section 420-38 of the Village Ordinance. Continued compliance with the regulations and standards is required. Violations of such standards shall remedied as required by the Village Zoning Ordinance.

No land or building in any district shall be operated in such a manner so as to create any dangerous, injurious, noxious or otherwise objectionable fire, explosive or other hazard; noise or vibration, smoke, dust, dirt or other form of air pollution; water pollution; electrical, radioactive or other disturbances; glare; or other substance, condition or element (referred to herein as "dangerous or objectionable elements") in such amount as to adversely affect the surrounding area or premises; provided that any use permitted by this ordinance may be undertaken and maintained if it conforms to the regulations of this subsection limiting dangerous and objectionable elements at the specified point or points of the determination of their existence.

The Village may require additional information be submitted to ensure that the Village Performance Standards are being met.

SECTION 7: PLAN COMPONENTS

The application shall include a list of all documents, materials or information that are attached to and a part of the application form. Submit eight (8) full-sized and one (1) set reduced to 11" x 17" of all plans and other attachments shall be included as part of this application, except if a component has been waived or deferred in writing by the Village Zoning Administrator. **For specific details related to each of the required information and plans see the attachment entitled "*Plan Components and Related Standards*" in Section 420-57 of the Village Zoning Ordinance.**

- ☐ Application—Applicant, Site, Use, Project and Plan Information
- ☐ Application fee
- ☐ Operational plan
- ☐ Title sheet
- ☐ Survey
- ☐ Site plan
- ☐ Grading and drainage plan
- ☐ Building and fire protection plans / floor plans
- ☐ Lighting plan
- ☐ Landscape and open space plan
- ☐ Signage plan
- ☐ Industrial/commercial waste survey
- ☒ Performance standards compliance
- ☐ Additional requirements, as determined by the Village Zoning Administrator, other appropriate Village staff members, or the Village Plan Commission, as appropriate.

Two or more plans may be combined, provided that all of the information submitted on the combined plan is clearly legible, but in no case shall the combined plans fail to show any of the information required for each individual plan as described below, unless such information is waived or deferred pursuant to the Zoning Ordinance.

SECTION 8: SIGNATURES

I,(We), hereby certify that all the above statements and all attachments submitted herewith are true and correct to the best of my knowledge. In addition I, (we) understand the requirements and procedures for Site and Operational Plan/Conditional Use Permit approval.

PROPERTY OWNER:

Name: SKYLINE TOWERS, LLC - JEFF MARLOW
(Please Print)

Signature: CARL AMBROSIUS FOR: JM

Address: 1300 N KIMPS CT

GREEN BAY WI 54313
(City) (State) (Zip)

Phone: (920) 662-1611

Fax: (920) 662-8204

E-mail: jmarlow@lexingtonneighborhoods.com

Date 3/23/14

APPLICANT:

Name: ROBERT E LEE & ASSOC. INC JARED SCHMIDT
(Please Print)

Signature:

Address: 1250 CENTENNIAL CENTRE BLVD

HOBART WI 54155
(City) (State) (Zip)

Phone: (920) 662-9641

Fax: (920) 662-9141

E-mail: jschmidt@releeinc.com

Date: 3/23/14

Is the applicant the owner of the property? ☒ **YES** ☐ **NO**

If no, then either proof of the applicant's legal interest in the subject real property (e.g. accepted offer to purchase, lease, etc., which may be appropriately redacted to preserve confidential information) or written authorization signed by the owner for the applicant to act as the owner's agent in connection with the application shall be included with the application.

DEVELOPER (if Applicable)

Name: _____
(Please Print)

Signature: _____

Address: _____

_____
(City) (State) (Zip)

Phone: _____

Fax: _____

E-mail: _____

Date _____

USER OR OCCUPANT OF SITE:

Name: _____
(Please Print)

Signature: _____

Address: _____

_____
(City) (State) (Zip)

Phone: _____

Fax: _____

E-mail: _____

Date: _____

3/01/16

RE: Narrative for Skyline Towers

Zoning Text Amendment

Building Unit Mix:

Skyline Towers will consist of 1- 60 unit 3 story building with architectural pleasing façade. Parking will be accommodated primarily by underground parking with additional surface parking available. Additional storage lockers are available internally in the underground parking area as well as on each floor. All units will have individual high efficiency top load washers/front load dryers along with built in microwaves, smooth top ranges and fridges. The anticipated rents based on a through market study will range from the mid $700 up to in excess of $1,600. Our residents will be responsible for their heat and water. The billing of the water will be accomplished by the building having one main water meter which will be billed to the property owner and paid. This water bill will then be split up and billed to the individual units by owner.

The 60 unit building will offer an array of floor plans ranging from an efficiency style to a luxurious 1622 sq ft. unit with 2bedrooms and 2.5 baths. The building will breakdown as follows:

FIRST FLOOR

5- 2 Bd 2.5 Ba 1200-1370 sq. ft.
5- 2 Bd 2 Ba 1132-1260 sq. ft.
1- Luxury 1 Bd 1.5 Ba 1173 sq. ft.
8- 1 Bd 1 Ba 820-980 sq. ft.
4- Efficiency 1 Ba 617 sq. ft.

SECOND FLOOR

3- Luxury 2 Bd 2.5 Ba 1370-1400 sq. ft.
3- 2 Bd 2.5 Ba 1200-1218 sq. ft.
5- 2 Bd 2 Ba 1132-1260 sq. ft.
2- 1 Bd Loft 1.5 Ba 1000 sq. ft.
6- 1 Bd 1.5 Ba 820-980 sq. ft.
2- Loft 1.5 Ba 1032 sq. ft.
2- Efficiency 617 sq. ft.

THIRD FLOOR

6- 2 Bd Loft 2.5 Ba 1503-1622 sq. ft.
4- 1 Bd Loft 2.5 Ba 1281-1411 sq. ft.
1- 1 Bd Loft 1.5 Ba 1401 sq. ft.
3- Loft 1.5 Ba 900-903 sq. ft.

Site Amenities:

Skyline Towers will have access to an executive clubhouse which is located next door at our current community Cobblestone Creek. "Club Cobblestone" will house the staff of the property management team from Lexington Management, which is the management arm of Lexington Homes, Inc. It is complete with security monitoring via cameras and access key system.

Site Specifics:

Site offers over 50% green space.

There are a total of 60 underground parking spaces with an additional 63 surface parking spaces for a total of 123 parking spaces. The lighting of the parking areas will be done by a pole system with shoebox fixtures, along with building mounted dark sky compliant LED wall pack lights, and can lights at building entrances. Additionally, the parking lots will be monitored via a camera monitoring system which will be a recorded DVR system.

Construction Practices:

Lexington Homes, Inc. prides itself on building communities in which are built of high quality and intricate conceptual design. Highlighted below you will find a list of some of our construction practices. Each building will have an internal sprinkling system for fire safety

- 2x6 construction on the external walls of the buildings
- High performance vinyl windows and patio doors with low E glass and argon gas
- Partial stone façade blended with maintenance free products
- Aluminum frame and full glass front entry doors for security and aesthetics
- Complete intercom system for entry
- Custom plastered interior walls (this is not a drywall board system)
- Individual sound walls divide each unit
- Sound insulation between the floors and RC-1 channel is added to the underside of the floor truss for additional reduction of sound transfer
- ¾ inch gypcrete poured on all floors for another sound barrier and it also acts as another fire preventative
- Individual unit entry doors have a deadbolt and peephole
- Postal service is accommodated inside the building for convenience and also as another security measure
- 30 yr dimensional shingle roofs

Property Management/Maintenance:

Lexington Management knows that the real success to any community lies within the long term management and maintenance of the site. We operate under a very structured process. We have included a copy of our management forms pertaining to these areas.

Leasing: Every potential resident that tours our site is required to fill out a "Welcome to the Community" form. This ensures the safety of our staff before each tour occurs. This form requires that we see a valid ID and gives us current living information. When the tour results in someone wanting to reside with us they are given our "Rental Process" form along with a "Standard Application for Occupancy". The rental process form clearly highlights what the qualifications are to reside at the property. The application is a more detailed document that allows us to further qualify every potential resident.

With the receipt of the application, security deposit and signed rental process form we start our detailed approval process. This includes a credit check which requires a score of 600 or higher, their gross monthly income shall be 2.5 times the amount of the monthly rent and a criminal background check is run. Lexington Management as a standard allows only 2 people per bedroom and 2 vehicles per unit. There are variables to this approval process which are also outlined on the rental process form.

Residents are required to sign a one year lease with variable terms after that one year period depending on the individual situation. It is management's goal to always try to secure one year leases continually with a built in parameter that does not allow anyone to move out October-April. We do not allow dogs.

Management Structure: As one of the principal owners of Lexington Homes, Michelle Stimpson has a genuine focus on the day to day operations of the entire management division. Overseeing just under 1,700 units she believes in treating every resident as she would like to be treated. She physically reviews every resident file and signs every single lease that occurs within the entire company. With 20 years of experience in this industry and having both a real estate and broker's license, she knows that on the management side of things the difference is always the details. Weekly she meets with her district staff to review every property that they oversee. In these meetings site suggestions along with marketing and maintenance are discussed in great detail with implementation plans to be carried out and reported each week. Our district staff is required to be at each property working with the site management. Monthly reports are clearly documented (provided) to ensure the continued success of each site. Our management operates on the principal that this is "someone's home". We focus on the presentation not only to our prospective and current residents but to their guests as well. Additionally, we will have property staff which will include a Property Manager, Assistant

Manager, Cleaning staff and Maintenance. Our goal is always to have as many of our staff physically living at the property so that someone is always available.

We are very centered on routine inspections. Monthly we do property inspection reports along with exterior and interior building inspection reports. Yearly we inspect the interior of every single apartment and complete a full report as to the interior condition of that unit. At that time an annual property review is also completed to help plan for upcoming projects.

Site Construction Schedule: Anticipated start date to be June of 2016 with site and excavation work. Anticipated completion date to be April 1st 2017.

Zoning Text Amendment: As part of this project, a deviation from Section 420-116.R-11 Multiple-Family Residential District is being requested. Therefore a rezone to a PUD is desired. The following are the deviations from the Zoning Code identified at the time of this submittal:

- 420-116. R-11 A. – Density for the 2.38 acre parcel, with 60 units will be 21.2 dwelling units per acre.
- 420-116. R-11 B. (1) (a) – The proposed development consists of one multi-family structure with 60 units per structure.
- 420-116. R-11 C. (1) (a) – Conditional use allows for one structure to be built not exceeding 36 units, the proposed development will consist of one 60 unit building.
- 420-116. R-11 F. (1) – No building or parts of the building shall exceed 35 feet in height. A deviation to this is being requested to a maximum height at the peak roof line of 51 feet, with main eave line height of approximately 33 feet.
- 420-116. R-11 F. (2) (a) – The minimum efficiency size of the proposed structure is 617 square feet, below the required 700 square feet standard. All other unit types exceed minimum standards.
- 420-116. R-11 G. (1) – A deviation from the setback requirements are being requested. A 35-foot building setback from the Village right of way is being requested along 94th Ave. and 97th Ct. This setback is consistent with the constructed development immediately to the north side of 81st St. 40-foot setbacks from the existing back of cub setbacks are being requested along 81st St. and 96th Ave, though the building is setback no closer than 59-feet from either of these streets. Pavement section and the trash enclosure are proposed to be constructed within the 40-foot back of curb setback line.

Photo 1 – Illustrates eastern half of the property. Photo taken looking north, near the intersection of 97th and 94th.

Photo 2 – Illustrates the site from the SW corner, looking north east. Photo is taken from the intersection of 96th and 97th.

Photo 3 - Illustrates the site from the NW corner, looking south east. Photo is taken from the intersection of 96th and 81st.

Photo 4 – Illustrates northern half of the property. Photo taken looking west/southwest, at the intersection of 81st and 94th.

LEGAL DESCRIPTION

All of Lot 2, Volume 30 of Certified Survey Maps, Page 5348, Map Number 5348, Document Number 1708704, being part of the Northeast ¼ of the Southeast ¼, Section 18, T21N, R17E, in the Town of Grand Chute, Outagamie County, Wisconsin.

ITEM	MANUFACTURER	COLOR
EXTERIOR		
Cultured Stone	Eldorado, Dutch Quality	Sienna Weather Ledge
Brick	Belden	Midland Blend
Roofing	Certainteed Dimensional	Weatherwood
Deck Railing & Spindles	Elite Fence Products	Beige
Windows	JeldWen	Almond
Garage Door	American Overhead Door	Almond
Aluminum Entrances	Tubelight	Sandstone
Siding - Lap Siding	HardiPlank - Cedarmill	Khaki Brown
Shakes - Shingle Siding	Hardie Shingle - Straight Edge	Rich Expresso
Trim, Corners, Band Boards, Lineals	Hardie Board	Navajo Beige
Deck Posts, Caps	Hardie Board	Navajo Beige
Soffits & Fascia, Aluminum	Rollex	Stone
Gutters & Downspouts	Rollex	Stone
Dumpster Enclosure	Concrete Block	Color to match Khaki Brown
Dumpster Vinyl Gate	n/a	Color to match Khaki Brown
INTERIOR		
Interior Trim/Doors	Sherwin Williams	Creamy SW 7012
Cabinets	Showcase	Dark Roast
Countertops - Kitchen	Granite	Ornamental
Countertops - Bathrooms	Granite	Ornamental
Carpet - Units	Engineered floors touchdown II E115	#1825
Carpet - Unit Stairways	Bigelow, Essentials collection	Artfully Done #7838
Carpet - Common Hallway/Stairs	Bigelow, Essentials collection	Artfully Done #7838
IVC Flooring	Mohawk Distinctive Luxury Plank	Custome Made ALP601
Interior Wall Paint	Sherwin Williams	Kilim Beige #6106
Window Treatments	Sherwin Williams	Alabaster
Appliances	Frigidaire	Black
Laundry	Frigidaire	White
Base board tile in bathrooms	HJ Martain	Manatoba Walnut
Elevator Interior	Antique Walnut	Otis Elevator
Elevator Doors	Painted - Mushroom EN-4	Otis Elevator

SKYLINE TOWERS
A DEVELOPMENT BY LEXINGTON HOMES
VILLAGE OF PLEASANT PRAIRIE, KENOSHA COUNTY, WISCONSIN

ATTENTION!
DOWNLOADED PLANS ARE NOT SCALEABLE, NEITHER THE OWNER OR THE ENGINEER SHALL BE HELD RESPONSIBLE FOR THE SCALE OR PRINT QUALITY OF DOWNLOADED PLANS. ONLY PRINTED PLANS FROM BLUE PRINT SERVICE CO., INC. SHALL BE CONSIDERED TO BE SCALEABLE PLANS.

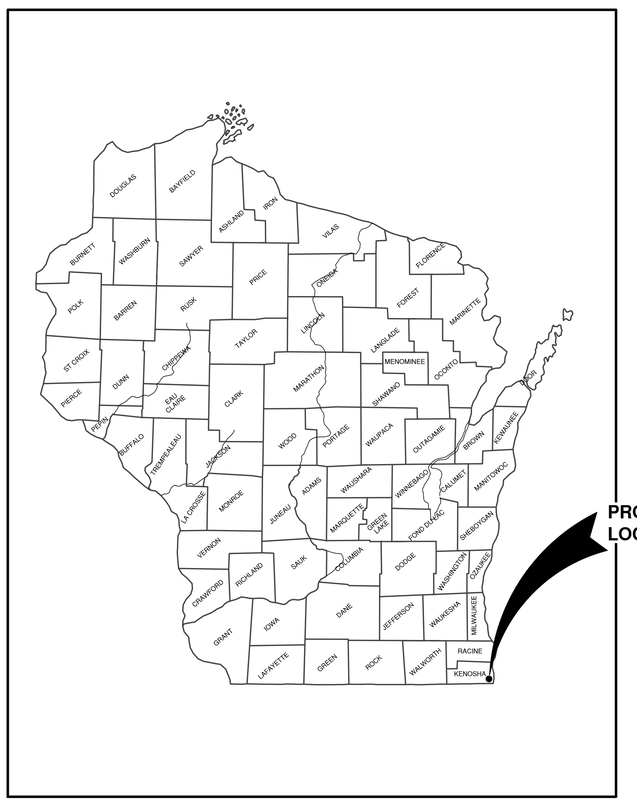

VICINITY MAP

NOTE:
EXISTING UTILITIES SHOWN ON PLANS ARE APPROXIMATE. THE CONTRACTOR SHALL BE RESPONSIBLE FOR OBTAINING EXACT LOCATIONS AND ELEVATIONS OF ALL UTILITIES, WHETHER SHOWN OR NOT, FROM THE OWNERS OF THE RESPECTIVE UTILITIES. ALL UTILITY OWNERS SHALL BE NOTIFIED FOR LOCATES BY THE CONTRACTOR 72 HOURS PRIOR TO EXCAVATION.

NOTE:
ALL EROSION CONTROL MEASURES SHALL BE IN PLACE PRIOR TO CONSTRUCTION AND SHALL CONFORM TO THE WISCONSIN DEPARTMENT OF NATURAL RESOURCES CONSTRUCTION SITE EROSION CONTROL AND TECHNICAL STANDARDS.

INDEX TO DRAWINGS

SHT. NO.	DESCRIPTION
1	LOCATION MAPS AND INDEX TO DRAWINGS
2	EXISTING SITE CONDITIONS
3	SITE PLAN
4	UTILITY PLAN
5	GRADING AND EROSION CONTROL PLAN
6	MISCELLANEOUS DETAILS
7	EROSION CONTROL - INLET PROTECTION AND MISCELLANEOUS DETAILS
8	EROSION CONTROL - DITCH CHECK DETAILS
9	EROSION CONTROL - SHEET FLOW DETAILS
L	LANDSCAPE PLAN

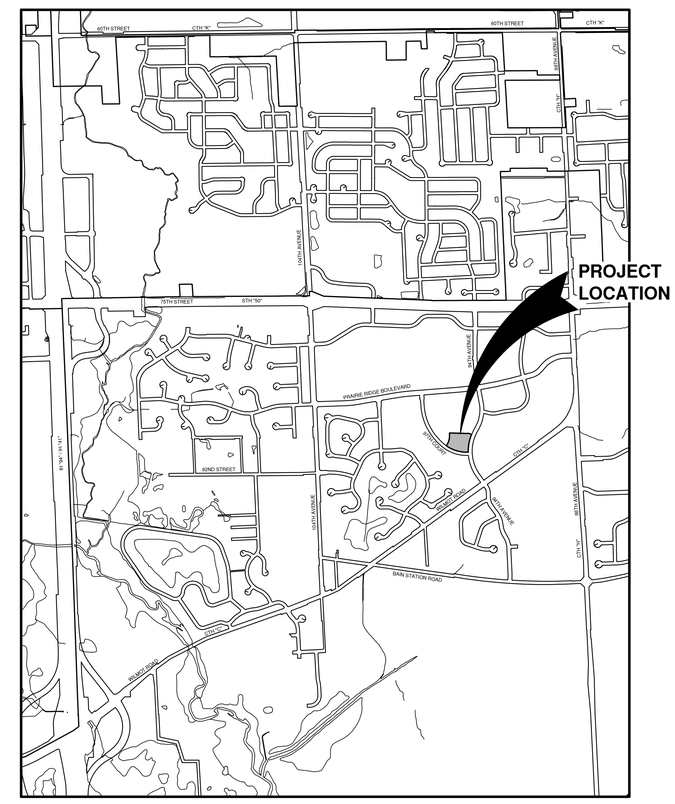

LOCATION MAP

File: R:\4300\4329\4329071\dwg\4329079C.dwg
Plot Date: Mar 23, 2016 - 8:40am

NO.	DATE	APPROV.	REVISION	NO.	DATE	APPROV.	REVISION

DRAWN LLP
CHECKED JGS
DESIGNED AJB

SKYLINE TOWERS
A DEVELOPMENT BY LEXINGTON HOMES
VILLAGE OF PLEASANT PRAIRIE
KENOSHA COUNTY, WISCONSIN

LOCATION MAPS AND INDEX TO DRAWINGS

DATE 03/2015
FILE 4329079C
JOB NO. 4329079

Robert E. Lee & Associates, Inc.
ENGINEERING, SURVEYING, ENVIRONMENTAL SERVICES
1250 CENTENNIAL CENTRE BOULEVARD HOBART, WI 54155
920-662-9641 www.releeinc.com
Celebrating 60 Years of Excellence

SHEET NO. 1

BENCHMARK	BENCHMARK ESTABLISHED BY: ROBERT E. LEE & ASSOCIATES, INC. FIELD VERIFY BENCHMARKS FOR ACCURACY.	
NO.	DESCRIPTION	EL.
1	ARROW ON TOP FLANGE OF FIRE HYDRANT	720.73
2	ARROW ON TOP FLANGE OF FIRE HYDRANT	727.46
3	SOUTH BOLT ON TOP FLANGE OF FIRE HYDRANT	734.86
4	ARROW ON TOP FLANGE OF FIRE HYDRANT	718.73
5	ARROW ON TOP FLANGE OF FIRE HYDRANT	725.95
6	SOUTH BOLT ON TOP FLANGE OF FIRE HYDRANT	727.64

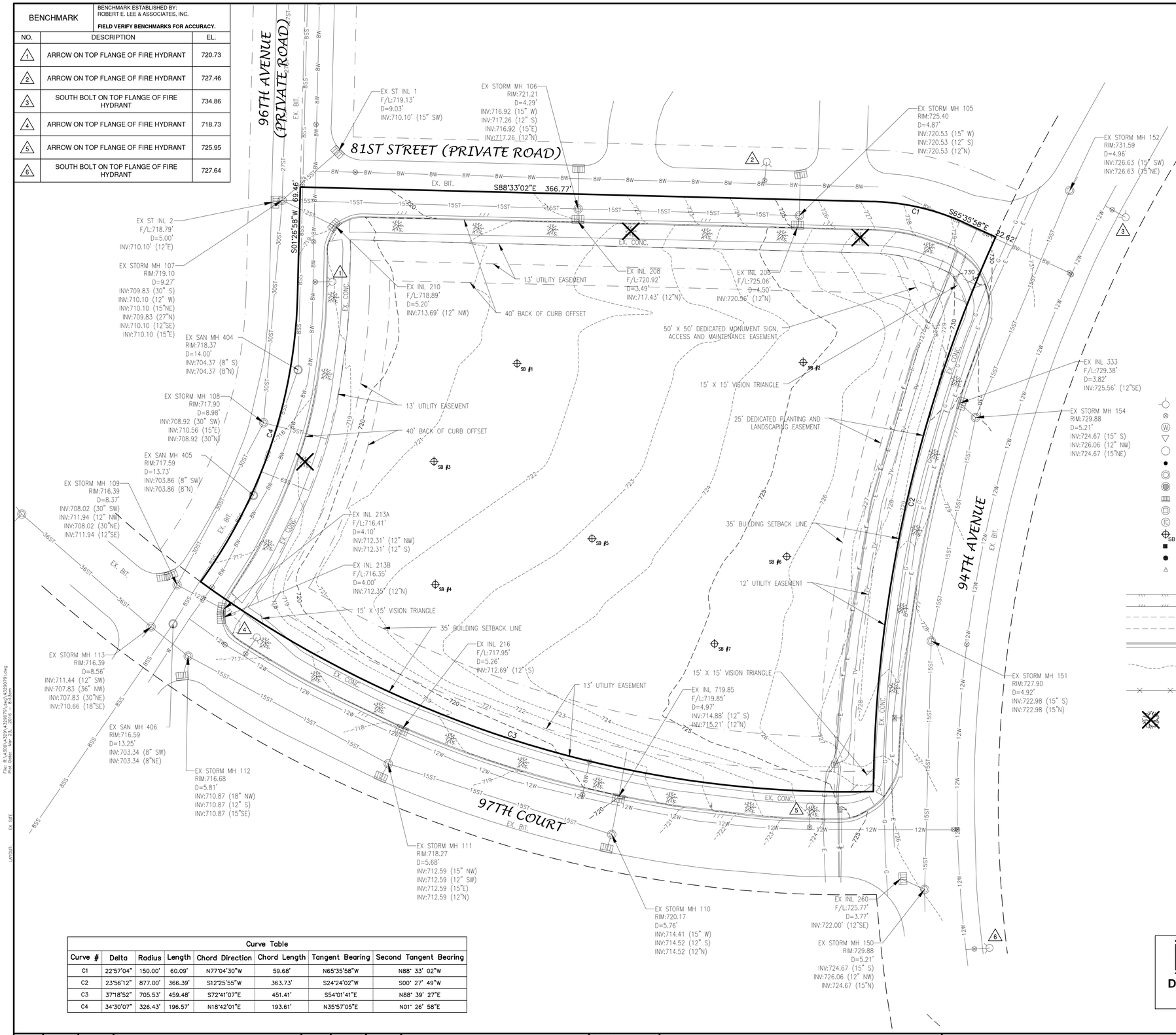

OWNER INFORMATION:

SKYLINE TOWERS, LLC
1300 N KIMPS CT
GREEN BAY, WI 54313

(920) 662-1611

CONTACT: JEFF MARLOW

CONTRACTOR INFORMATION:

LEXINGTON HOMES, INC.
1300 N KIMPS CT
GREEN BAY, WI 54313

(920) 655-1961

CONTACT: CARL AMBROSIUS

UTILITY INFORMATION:

UTILITIES PRESENT:
PLEASANT PRAIRIE UTILITY DEPARTMENT, AT & T, TIME WARNER CABLE AND WE ENERGIES.

UTILITIES SHOWN ON THIS MAP ARE BASED ON LOCATES FROM:

DIGGER'S HOTLINE TICKET NUMBERS 20160905163, 20160905172 AND 20160905177, DATED 03/07/2016, VISIBLE OBSERVATION AND RECORD UTILITY PLAN DOCUMENTS. UTILITY LINE LOCATIONS SHOULD BE VERIFIED PRIOR TO ANY DIGGING. THIS SITE MAY CONTAIN BURIED UTILITIES NOT IDENTIFIED ON THIS MAP.

DIGGERS HOTLINE = 1-800-242-8511

WATER/SANITARY/STORM
PLEASANT PRAIRIE UTILITY DEPT
9915 39TH AV
PLEASANT PRAIRIE, WI 53158

(262) 694-1400

GAS & ELECTRIC:
WE ENERGIES
231 W MICHIGAN ST
MILWAUKEE, WI 53203

(414) 221-2345

TELECOMMUNICATIONS:
AT & T / SBC
9800 76TH ST SUITE 104
PLEASANT PRAIRIE, WI 53158

(262) 697-7100

TELECOMMUNICATIONS:
TIME WARNER CABLE
1320 NORTH MARTIN LUTHER KING JR DR
MILWAUKEE, WI 53212

(414) 277-4111

LEGEND

- FIRE HYDRANT
- WATER VALVE/CURB STOP
- WATER MANHOLE
- REDUCER/INCREASER
- SANITARY MANHOLE
- AIR RELIEF MANHOLE
- STORM MANHOLE
- OPEN STORM MANHOLE
- STORM INLET
- STORM INLET MANHOLE
- TANK COVER
- SOIL BORING
- POST
- IRON PIPE/ROD
- PK NAIL
- POWER POLE
- POWER POLE W/GUY WIRE
- LIGHT POLE
- TRAFFIC SIGNAL POLE
- ELECTRIC MANHOLE
- ELECTRIC METER
- TELEPHONE MANHOLE
- TELEPHONE PEDESTAL
- CABLE TV MANHOLE
- CABLE TV PEDESTAL
- GAS VALVE
- GAS METER
- MAILBOX
- SIGN
- BOLLARD
- DECIDUOUS TREE
- CONIFEROUS TREE
- BUSH
- RIP RAP
- CULVERT
- CONCRETE
- WETLANDS
- HANDICAP PARKING
- EDGE OF ASPHALT
- EDGE OF GRAVEL
- CURB & GUTTER
- CONTOUR LINE
- FENCE
- TREE/SHRUB TO BE REMOVED
- SANITARY SEWER (SIZE NOTED)
- FORCEMAIN (SIZE NOTED)
- STORM SEWER (SIZE NOTED)
- WATERMAIN (SIZE NOTED)
- GAS LINE
- UNDERGROUND TELEPHONE LINE
- UNDERGROUND ELECTRIC LINE
- CABLE TV LINE
- FIBER OPTIC LINE
- R/W LINE
- PROPERTY LINE
- EASEMENT LINE
- BUILDING SETBACK LINE
- SECTION LINE

		WM	WATERMAIN		
		HYD.	HYDRANT		
GR.	GRAVEL	SAN	SANITARY SEWER	B-B	BACK TO BACK (OF CURB)
BIT.	BITUMINOUS	ST	STORM SEWER	F-F	FACE TO FACE (OF CURB)
ASPH.	ASPHALT	MH	MANHOLE	R/W	RIGHT OF WAY
CONC.	CONCRETE	CB	CATCH BASIN	T/C	TOP OF CURB
SW	SIDEWALK	TELE	TELEPHONE	F/L	FLOW LINE
BLDG	BUILDING	ELEC	ELECTRIC	C/L	CENTERLINE
HSE	HOUSE	TV	TELEVISION	R	RADIUS
PED	PEDESTAL	EX	EXISTING	INV.	INVERT
PP	POWER POLE	PR	PROPOSED	CMP	CORRUGATED METAL PIPE
LP	LIGHT POLE	EOR	END OF RADIUS	RCP	REINFORCED CONCRETE PIPE
BM	BENCH MARK	BOC	BACK OF CURB	CULV.	CULVERT

Curve Table

Curve #	Delta	Radius	Length	Chord Direction	Chord Length	Tangent Bearing	Second Tangent Bearing
C1	22°57'04"	150.00'	60.09'	N77°04'30"W	59.68'	N65°35'58"W	N88° 33' 02"W
C2	23°56'12"	877.00'	366.39'	S12°25'55"W	363.73'	S24°24'02"W	S00° 27' 49"W
C3	37°18'52"	705.53'	459.48'	S72°41'07"E	451.41'	S54°01'41"E	N88° 39' 27"E
C4	34°30'07"	326.43'	196.57'	N18°42'01"E	193.61'	N35°57'05"E	N01° 26' 58"E

DIGGERS HOTLINE
Dial 811 or (800) 242-8511
www.DiggersHotline.com

TO OBTAIN LOCATION OF PARTICIPANTS UNDERGROUND FACILITIES BEFORE YOU DIG IN WISCONSIN

WIS. STATUTE 182.0175 (1974) REQUIRES MIN. OF 3 WORK DAYS NOTICE BEFORE YOU EXCAVATE.

NORTH

0' 30' 60'
SCALE IN FEET

NO.	DATE	APPROV.	REVISION	NO.	DATE	APPROV.	REVISION

DRAWN LLP
CHECKED JGS
DESIGNED AJB

SKYLINE TOWERS
A DEVELOPMENT BY LEXINGTON HOMES
VILLAGE OF PLEASANT PRAIRIE
KENOSHA COUNTY, WISCONSIN

EXISTING SITE CONDITIONS

DATE 03/2016
FILE 4329079T
JOB NO. 4329079

Robert E. Lee & Associates, Inc.
ENGINEERING, SURVEYING, ENVIRONMENTAL SERVICES
1250 CENTENNIAL CENTRE BOULEVARD HOBART, WI 54155
920-662-9641 www.releeinc.com
Celebrating 60 Years of Excellence

SHEET NO. 2

File: R:\4329\4329\4329079\dwg\4329079t.dwg
Plot Date: Mar 23, 2016 - 8:43am
LAYOUT: EX SITE

BENCHMARK	BENCHMARK ESTABLISHED BY: ROBERT E. LEE & ASSOCIATES, INC. **FIELD VERIFY BENCHMARKS FOR ACCURACY.**	
NO.	DESCRIPTION	EL.
1	ARROW ON TOP FLANGE OF FIRE HYDRANT	720.73
2	ARROW ON TOP FLANGE OF FIRE HYDRANT	727.46
3	SOUTH BOLT ON TOP FLANGE OF FIRE HYDRANT	734.86
4	ARROW ON TOP FLANGE OF FIRE HYDRANT	718.73
5	ARROW ON TOP FLANGE OF FIRE HYDRANT	725.95
6	SOUTH BOLT ON TOP FLANGE OF FIRE HYDRANT	727.64

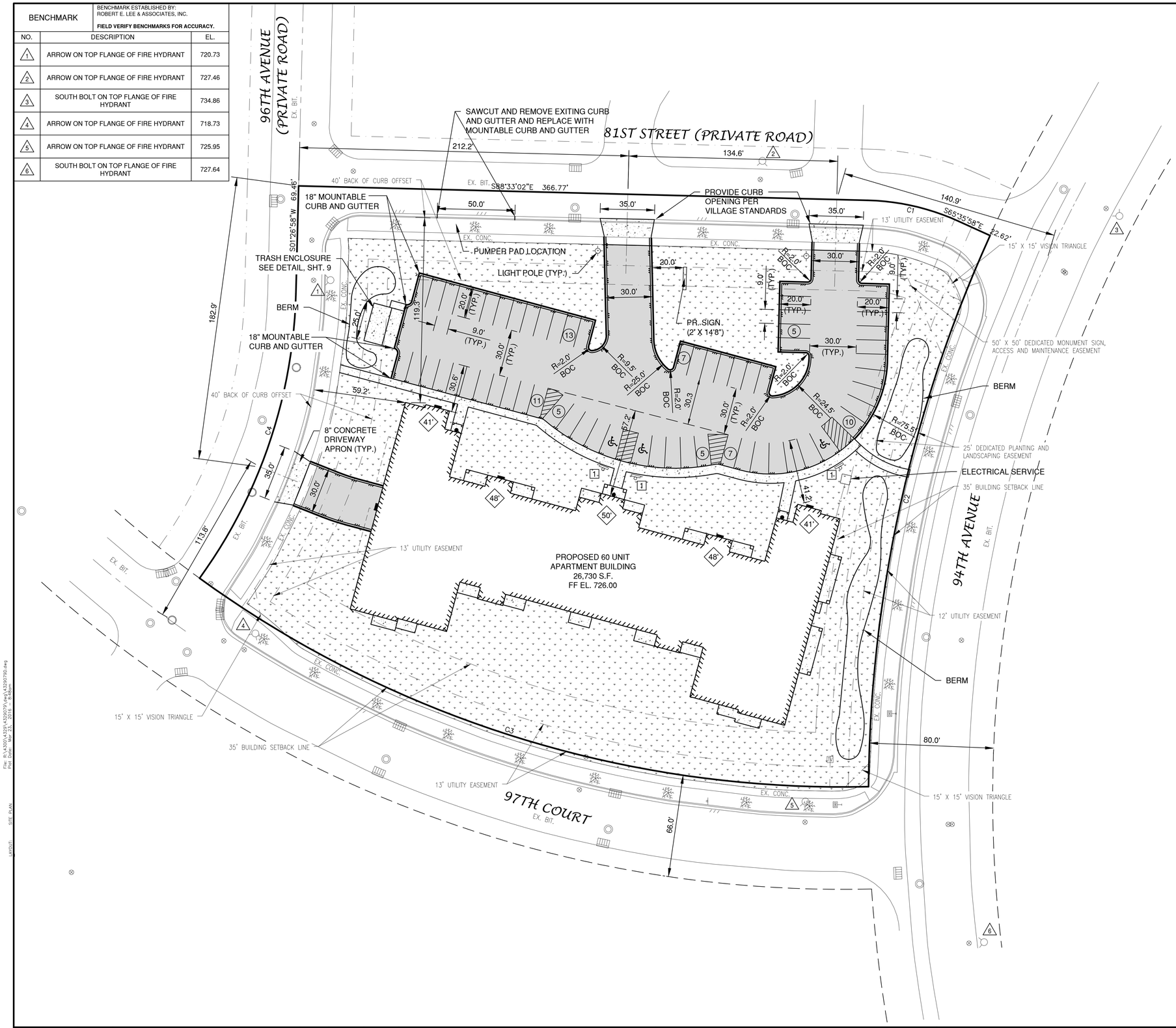

NOTE

ALL AREAS DESIGNATED AS "GREEN SPACE" OR "LAWN", SHALL BE TOPSOILED TO A DEPTH OF 6 INCHES, SEEDED AND MULCHED. AREA TO BE RAKED FREE OF STONES AND CLUMPS.

PARKING DATA

SURFACE PARKING SPACES PROVIDED = 63

UNDERGROUND PARKING SPACES PROVIDED = 60

SURFACE HANDICAP ACCESSIBLE PARKING SPACES = 3

UNDERGROUND HANDICAP ACCESSIBLE PARKING SPACES = 2

TOTAL PARKING SPACES PROVIDED = 123

(33) 1 - BEDROOM UNITS X 1.5 SPACES / UNIT = 49.5 SPACES

(27) 2 - BEDROOM UNITS X 2 SPACES / UNIT = 54 SPACES

60 TOTAL UNITS X 1 SPACE / 3 UNITS = 7.5 SPACES

TOTAL SPACES REQUIRED = 111 SPACES

SITE DATA

TOTAL AREA = 2.83 ACRES, 123,229 S.F.

BUILDING AREA = 0.61 ACRES, 26,730 S.F. (21.5%)

SIDEWALK/PARKING LOT AREA = 0.78 ACRES, 33,946 S.F. (27.6%)

GREEN SPACE = 1.44 ACRES, 62,553 S.F. (50.9%)

ZONING

PUD

PARCEL INFO

SKYLINE TOWERS
PARCEL NUMBER: 91-4-122-084-0413

ALL OF LOT 3, CERTIFIED SURVEY MAP NUMBER 2458, DOCUMENT 1420259, BEING PART OF THE NORTHWEST ¼ OF THE SOUTHEAST ¼ AND PART OF THE NORTHEAST ¼ OF THE SOUTHWEST ¼, ALL LOCATED IN SECTION 8, T1N, R22E, IN THE VILLAGE OF PLEASANT PRAIRIE, KENOSHA COUNTY, WISCONSIN.

LEGEND

- CONCRETE PAVEMENT
- ASPHALT PAVEMENT
- LANDSCAPE AREA
- GREEN SPACE
- PROPOSED 18" STANDARD CURB & GUTTER (UNLESS OTHERWISE NOTED)
- PROPOSED 18" SHEDDING CURB & GUTTER
- TRAFFIC FLOW ARROW
- HANDICAPPED PARKING
- (12) INDICATES NUMBER OF PARKING STALLS
- LIGHT POLE
- LED WALL PACK
- CAN LIGHT
- 50' BUILDING HEIGHT AT FRONT OF BUILDING

*NOTE: ALL DIMENSIONS ARE TO THE FACE OF CURB, UNLESS NOTED OTHERWISE

NORTH

0' 30' 60'

SCALE IN FEET

NO.	DATE	APPROV.	REVISION	NO.	DATE	APPROV.	REVISION

DRAWN LLP
CHECKED JGS
DESIGNED AJB

SKYLINE TOWERS
A DEVELOPMENT BY LEXINGTON HOMES
VILLAGE OF PLEASANT PRAIRIE
KENOSHA COUNTY, WISCONSIN

SITE PLAN

DATE 03/2016
FILE 4329079D
JOB NO. 4329079

Robert E. Lee & Associates, Inc.
ENGINEERING, SURVEYING, ENVIRONMENTAL SERVICES
1250 CENTENNIAL CENTRE BOULEVARD HOBART, WI 54155
920-662-9641 www.releeinc.com
Celebrating 60 Years of Excellence

SHEET NO. 3

File: R:\4300\4329\4329079\dwg\4329079D.dwg
Plot Date: Mar 23, 2016 8:46am
LAYOUT: SITE PLAN

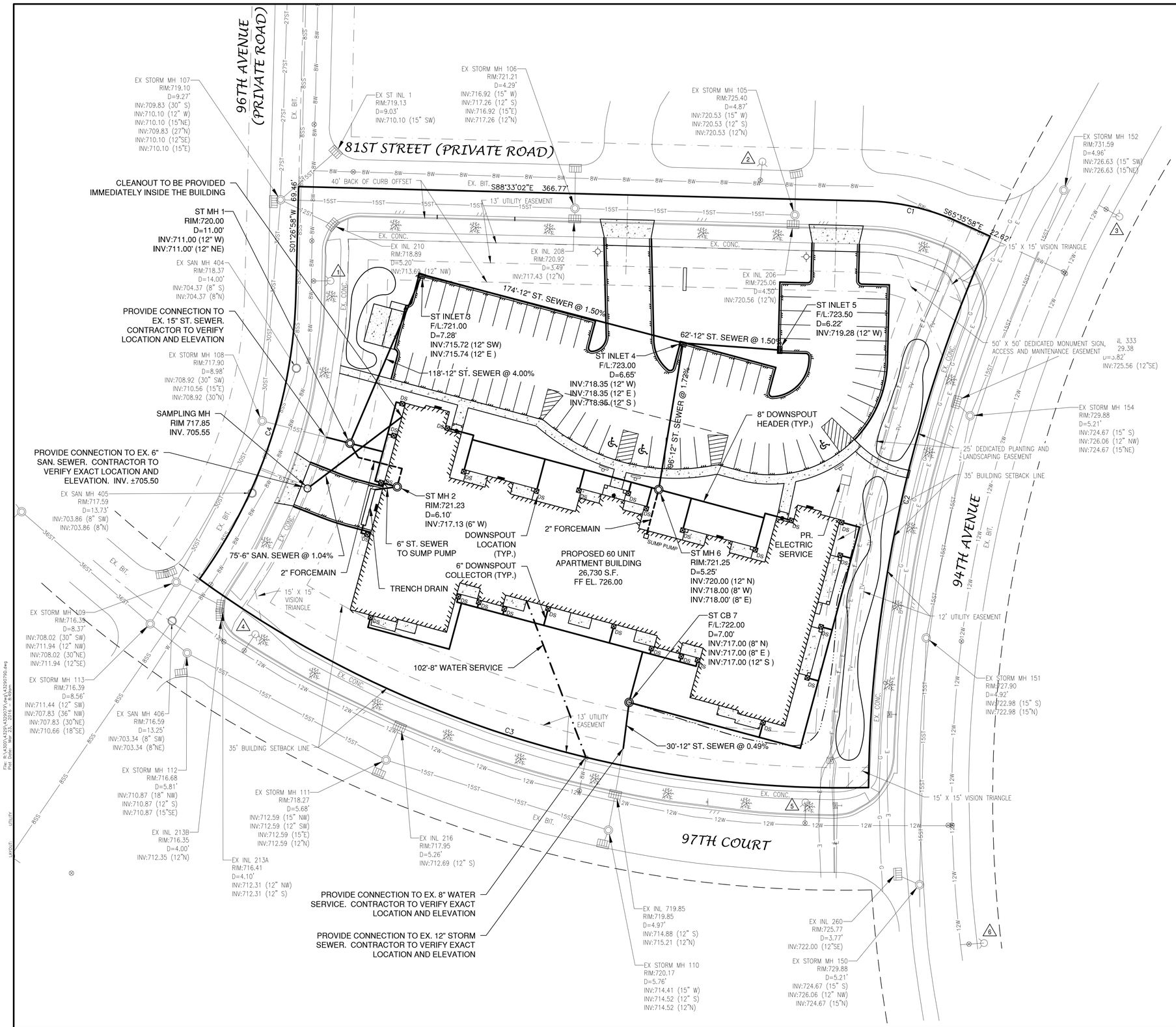

NOTE

1. A MINIMUM OF 6.5 FEET OF COVER SHALL BE MAINTAINED OVER ALL WATERMAIN.
2. SANITARY SEWER, WATERMAIN AND STORM SEWER SHALL BE CONSTRUCTED IN ACCORDANCE WITH THE STANDARD SPECIFICATIONS FOR SEWER AND WATER CONSTRUCTION IN WISCONSIN AND ADMINISTRATIVE CODE CHAPTERS COMM 81-87.
3. FIELD VERIFY LOCATION OF EXISTING UTILITIES. IF EXISTING LOCATIONS DIFFER FROM WHAT IS INDICATED ON THE PLANS, **CONTACT ENGINEER,** PRIOR TO CONTINUED WORK.
4. ALL SANITARY SEWER, STORM SEWER AND WATER SERVICES / MAINS SHALL BE PROVIDED WITH TRACER WIRE OR OTHER METHOD TO BE LOCATED.

LEGEND

- PROPOSED SANITARY SEWER
- 8SS — EXISTING SANITARY SEWER (SIZE NOTED)
- PROPOSED STORM SEWER
- 10ST — EXISTING STORM SEWER (SIZE NOTED)
- PROPOSED WATERMAIN
- 6W — EXISTING WATERMAIN (SIZE NOTED)

PROPOSED / EXISTING

- FIRE HYDRANT
- WATER VALVE/CURB STOP
- WATER MANHOLE
- REDUCER/INCREASER
- SANITARY MANHOLE
- LIFT STATION
- TRACER WIRE SIGNAL CONNECTION BOX
- CO — CLEANOUT
- STORM MANHOLE
- STORM CATCH BASIN
- STORM INLET
- STORM INLET MANHOLE
- YARD DRAIN
- STANDPIPE
- DS — ROOF DOWNSPOUT

BENCHMARK	BENCHMARK ESTABLISHED BY: ROBERT E. LEE & ASSOCIATES, INC. **FIELD VERIFY BENCHMARKS FOR ACCURACY.**	
NO.	DESCRIPTION	EL.
1	ARROW ON TOP FLANGE OF FIRE HYDRANT	720.73
2	ARROW ON TOP FLANGE OF FIRE HYDRANT	727.46
3	SOUTH BOLT ON TOP FLANGE OF FIRE HYDRANT	734.86
4	ARROW ON TOP FLANGE OF FIRE HYDRANT	718.73
5	ARROW ON TOP FLANGE OF FIRE HYDRANT	725.95
6	SOUTH BOLT ON TOP FLANGE OF FIRE HYDRANT	727.64

NORTH

0' 30' 60'

SCALE IN FEET

NO.	DATE	APPROV.	REVISION	NO.	DATE	APPROV.	REVISION

DRAWN LLF
CHECKED JGS
DESIGNED AJB

SKYLINE TOWERS
A DEVELOPMENT BY LEXINGTON HOMES
VILLAGE OF PLEASANT PRAIRIE
KENOSHA COUNTY, WISCONSIN

UTILITY PLAN

DATE 03/2016
FILE 4329079D
JOB NO. 4329079

Robert E. Lee & Associates, Inc.
ENGINEERING, SURVEYING, ENVIRONMENTAL SERVICES
1250 CENTENNIAL CENTRE BOULEVARD HOBART, WI 54155
920-662-9641 www.releeinc.com
Celebrating 60 Years of Excellence

SHEET NO. 4

BENCHMARK	BENCHMARK ESTABLISHED BY: ROBERT E. LEE & ASSOCIATES, INC. **FIELD VERIFY BENCHMARKS FOR ACCURACY.**	
NO.	DESCRIPTION	EL.
1	ARROW ON TOP FLANGE OF FIRE HYDRANT	720.73
2	ARROW ON TOP FLANGE OF FIRE HYDRANT	727.46
3	SOUTH BOLT ON TOP FLANGE OF FIRE HYDRANT	734.86
4	ARROW ON TOP FLANGE OF FIRE HYDRANT	718.73
5	ARROW ON TOP FLANGE OF FIRE HYDRANT	725.95
6	SOUTH BOLT ON TOP FLANGE OF FIRE HYDRANT	727.64

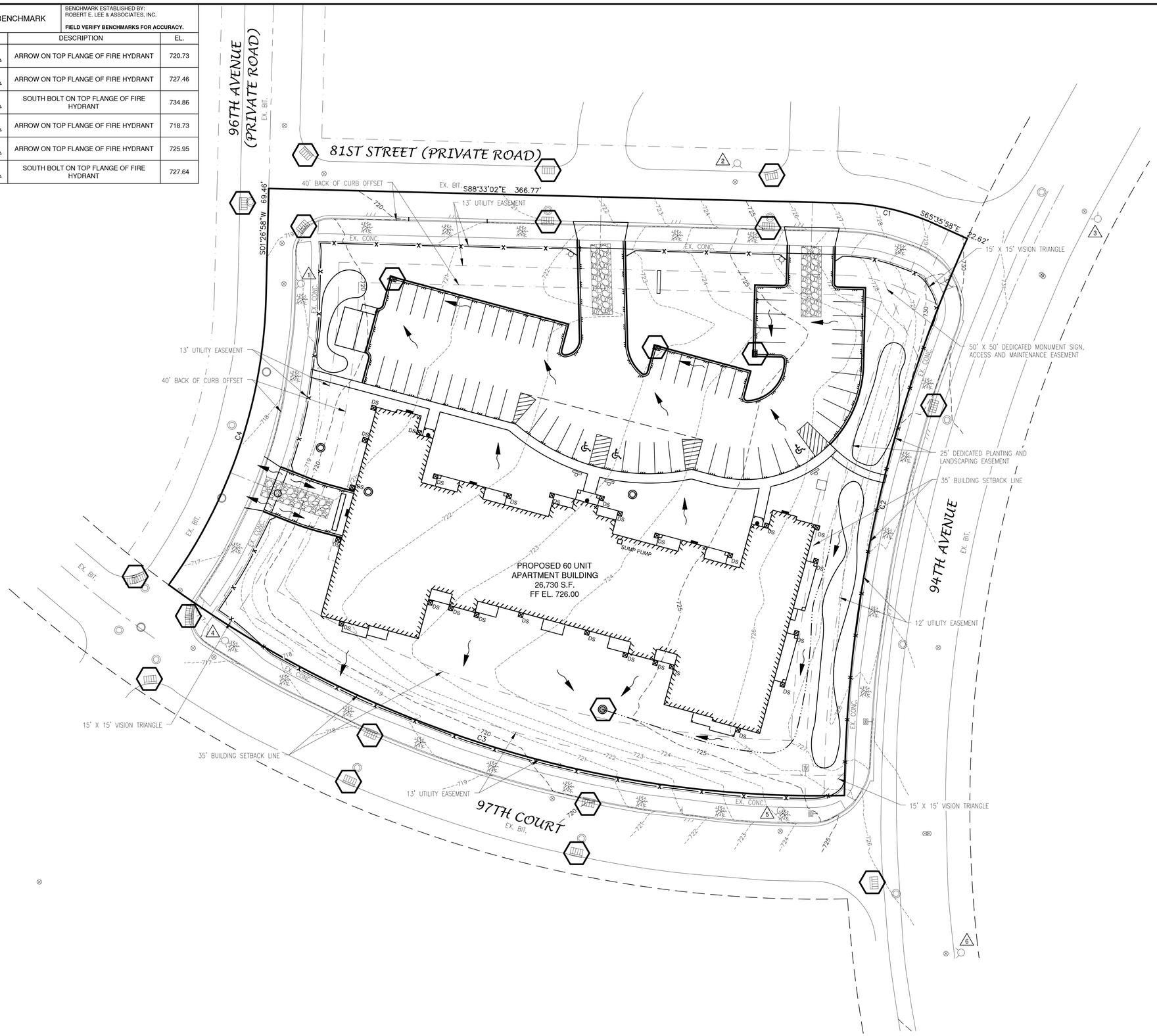

EROSION CONTROL

ALL EROSION CONTROL PRACTICES INDICATED ON THIS PLAN ARE APPROXIMATE LOCATIONS ONLY. THE ACTUAL SITE MAY REQUIRE MORE OR LESS EROSION CONTROL DEPENDING ON THE CURRENT CONDITION OF THE SITE.

1. SILT FENCE IS REQUIRED DOWNSLOPE OF ANY DISTURBED LAND THAT MAY CARRY SEDIMENTS OFF SITE.
2. A TRACKING PAD IS REQUIRED AT ANY INGRESS/EGRESS LOCATION, WHERE SEDIMENT MAY BE TRACKED OFF-SITE.
3. PROPER INLET PROTECTION SHALL BE USED DEPENDING ON THE INLET TYPE.
4. ALL NECESSARY SITE DEWATERING SHALL BE PERFORMED IN ACCORDANCE WITH WDNR TECHNICAL STANDARD 1061.

LEGEND

T/C 999.99	TOP OF CURB ELEVATION
F/L 888.88	FLOW LINE ELEVATION
S/W 666.66	TOP OF SIDEWALK ELEVATION
E/P 555.55	EDGE OF PAVEMENT ELEVATION
R/W 444.44	TOP OF RETAINING WALL ELEVATION
333.33	GROUND ELEVATION
	DRAINAGE SWALE
	DRAINAGE DIVIDE
	SILT FENCE
	BALE DITCH CHECK
	FLOW ARROW
	TRACKING PAD
	INLET PROTECTION

NORTH

0' 30' 60'

SCALE IN FEET

NO.	DATE	APPROV.	REVISION	NO.	DATE	APPROV.	REVISION

DRAWN LLP
CHECKED JGS
DESIGNED AJB

SKYLINE TOWERS
A DEVELOPMENT BY LEXINGTON HOMES
VILLAGE OF PLEASANT PRAIRIE
KENOSHA COUNTY, WISCONSIN

GRADING AND EROSION CONTROL PLAN

DATE 03/2016
FILE 4329079D
JOB NO. 4329079

Robert E. Lee & Associates, Inc.
ENGINEERING, SURVEYING, ENVIRONMENTAL SERVICES
1250 CENTENNIAL CENTRE BOULEVARD HOBART, WI 54155
920-662-9641 www.releeinc.com
Celebrating 60 Years of Excellence

SHEET NO. 5

File: R:\4300\4329\4329079\dwg\4329079D.dwg
Plot Date: Mar 23, 2016 - 8:51am
LAYOUT: GRADING

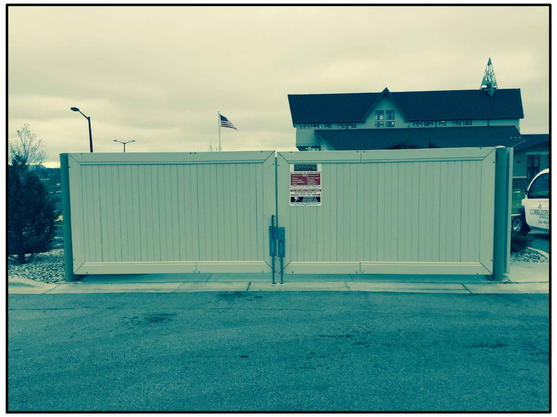

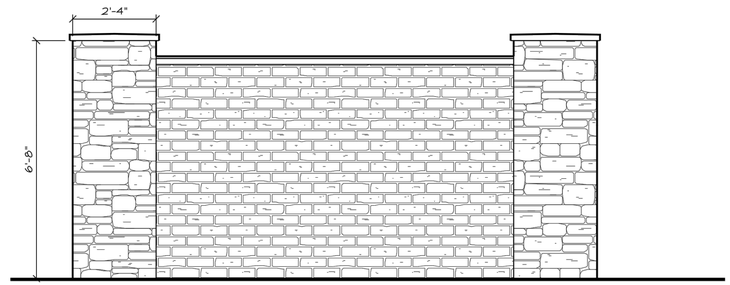

SIGN ELEVATION

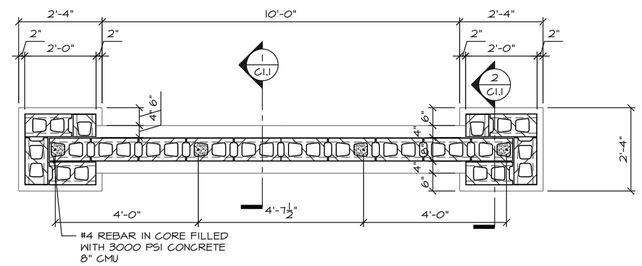

SIGN PLAN

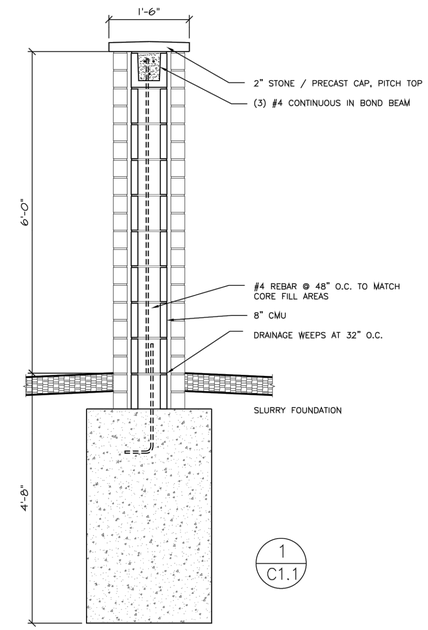

SIGN DETAIL

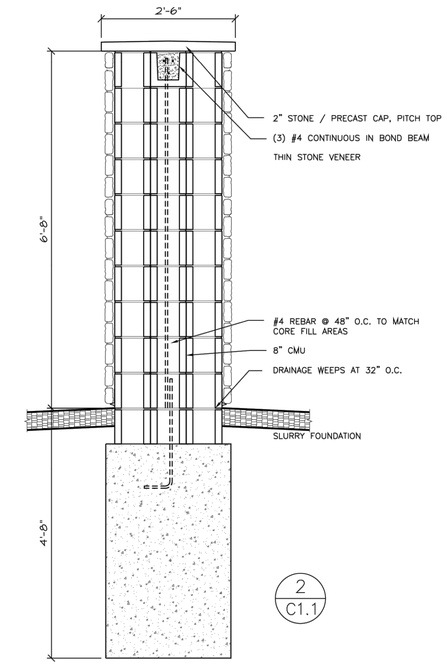

SIGN DETAIL

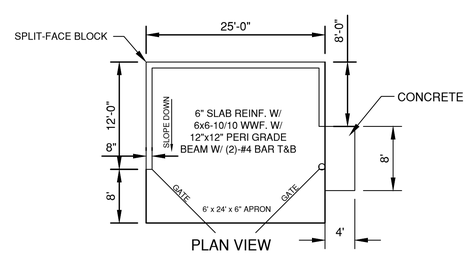

PLAN VIEW

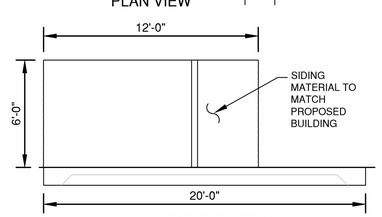

SIDE ELEVATION

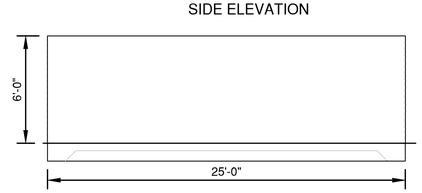

DUMPSTER DETAIL

NO.	DATE	APPROV.	REVISION	NO.	DATE	APPROV.	REVISION

DRAWN LLP
CHECKED JGS
DESIGNED AJB

SKYLINE TOWERS
A DEVELOPMENT BY LEXINGTON HOMES
VILLAGE OF PLEASANT PRAIRIE
KENOSHA COUNTY, WISCONSIN

MISCELLANEOUS DETAILS

DATE 03/2016
FILE DETAILS
JOB NO. 4329079

Robert E. Lee & Associates, Inc.
ENGINEERING, SURVEYING, ENVIRONMENTAL SERVICES
1250 CENTENNIAL CENTRE BOULEVARD HOBART, WI 54155
920-662-9641 www.releeinc.com
Celebrating 60 Years of Excellence

SHEET NO. 6

File: R:\4300\4329\4329079\dwg\DETAILS.dwg
Plot Date: Mar 23, 2016 8:05am
LAYOUT: DETAILS

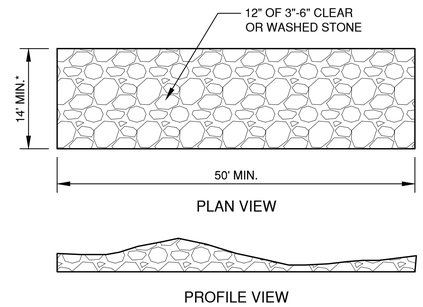

*14' MIN. OR FULL WIDTH OF THE EGRESS POINT.
REFERENCE WDNR TECHNICAL STANDARD 1057.

TRACKING PAD DETAIL

(IF APPLICABLE)

INLET PROTECTION NOTES:

MANUFACTURED ALTERNATIVES APPROVED AND LISTED ON THE WDOT PRODUCT ACCEPTABILITY LIST MAY BE SUBSTITUTED.

WHEN REMOVING OR MAINTAINING INLET PROTECTION, CARE SHALL BE TAKEN SO THAT THE SEDIMENT TRAPPED ON THE GEOTEXTILE FABRIC DOES NOT FALL INTO THE INLET. ANY MATERIAL FALLING INTO THE INLET SHALL BE REMOVED IMMEDIATELY.

1. FINISHED SIZE, INCLUDING FLAP POCKETS WHERE REQUIRED, SHALL EXTEND A MINIMUM OF 10" AROUND THE PERIMETER TO FACILITATE MAINTENANCE OR REMOVAL.
2. FOR INLET PROTECTION, TYPE C (WITH CURB BOX), AN ADDITIONAL 18" OF FABRIC IS WRAPPED AROUND THE WOOD AND SECURED WITH STAPLES. THE WOOD SHALL NOT BLOCK THE ENTIRE HEIGHT OF THE CURB BOX OPENING.
3. FLAP POCKETS SHALL BE LARGE ENOUGH TO ACCEPT WOOD 2"X4".

INSTALLATION NOTES:
TYPE "B" & "C"

TRIM EXCESS FABRIC IN THE FLOW LINE TO WITHIN 3" OF THE GRATE.

DEMONSTRATE A METHOD OF MAINTENANCE, USING A SEWN FLAP, HAND HOLDS OR OTHER METHOD TO PREVENT ACCUMULATED SEDIMENT FROM ENTERING THE INLET.

TYPE "D"

DO NOT INSTALL INLET PROTECTION TYPE D IN INLETS SHALLOWER THAN 30" MEASURED FROM THE BOTTOM OF THE INLET TO THE TOP OF THE GRATE.

TRIM EXCESS FABRIC IN THE FLOW LINE TO WITHIN 3" OF THE GRATE.

THE INSTALLED BAG SHALL HAVE A MINIMUM SIDE CLEARANCE, BETWEEN THE INLET WALLS AND THE BAG, MEASURED AT THE BOTTOM OF THE OVERFLOW HOLES, OF 3". WHERE NECESSARY, CINCH THE BAG, USING PLASTIC ZIP TIES, TO ACHIEVE THE 3" CLEARANCE, THE TIES SHALL BE PLACED AT THE MAXIMUM OF 4" FROM THE BOTTOM OF THE BAG.

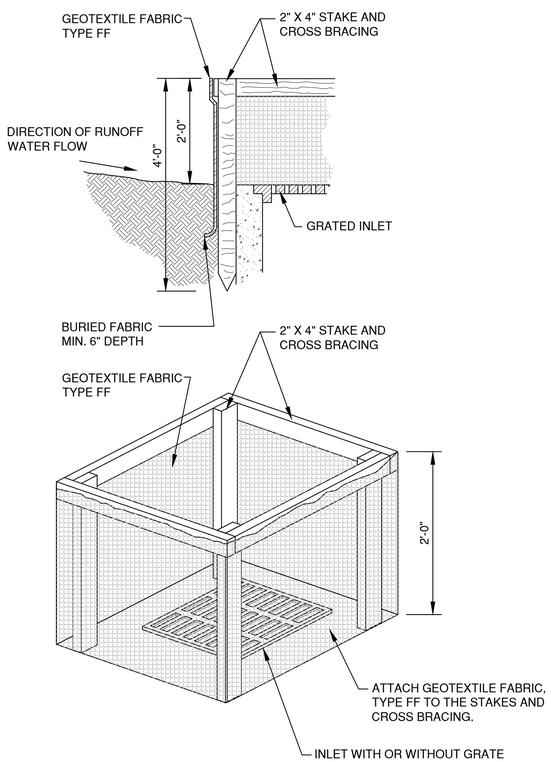

INLET PROTECTION, TYPE A

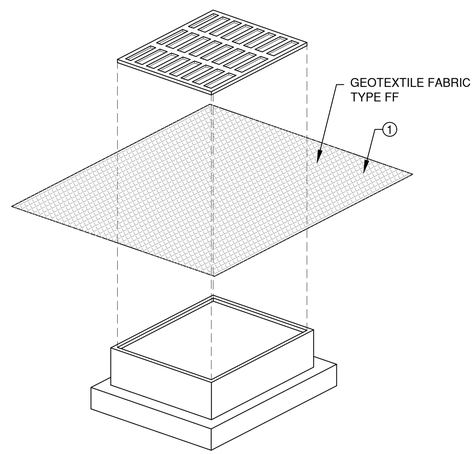

INLET PROTECTION, TYPE B
(WITHOUT CURB BOX)

(CAN BE INSTALLED IN ANY INLET WITHOUT A CURB BOX)

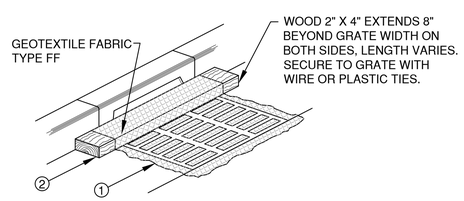

INLET PROTECTION, TYPE C
(WITH CURB BOX)

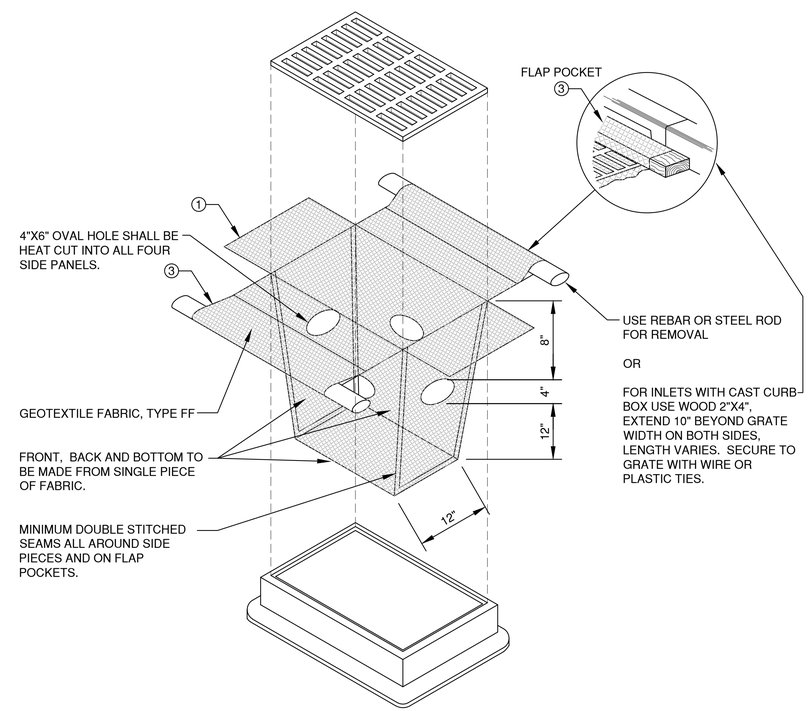

INLET PROTECTION, TYPE D

(CAN BE INSTALLED IN ANY INLET TYPE WITH OR WITHOUT CURB BOX AS PER NOTE "2")

File: R:\4300\4329\4329079\dwg\EROSION CONTROL.dwg
Plot Date: Mar 23, 2016 - 7:48am
LAYOUT: INLET PROTECTION
INLET PROTECTION

NO.	DATE	APPROV.	REVISION	NO.	DATE	APPROV.	REVISION

DRAWN LLP
CHECKED JGS
DESIGNED AJB

SKYLINE TOWERS
A DEVELOPMENT BY LEXINGTON HOMES
VILLAGE OF PLEASANT PRAIRIE
KENOSHA COUNTY, WISCONSIN

EROSION CONTROL
INLET PROTECTION AND
MISCELLANEOUS DETAILS

DATE 03/23016
FILE EROSION CONTROL
JOB NO. 4329079

Robert E. Lee & Associates, Inc.
ENGINEERING, SURVEYING, ENVIRONMENTAL SERVICES
1250 CENTENNIAL CENTRE BOULEVARD HOBART, WI 54155
920-662-9641 www.releinc.com
Celebrating 60 Years of Excellence

SHEET NO. 7

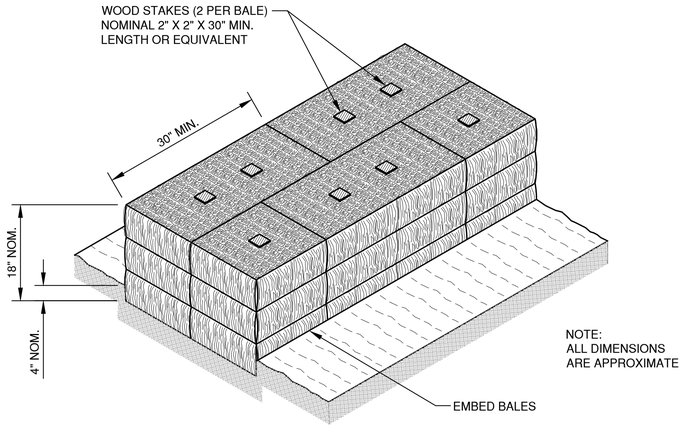

SECTION A-A

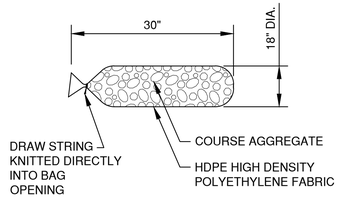

FILTER BAG DETAIL

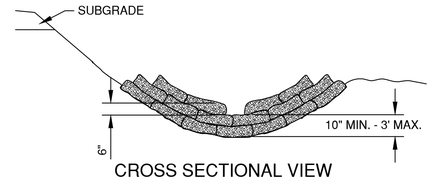

CROSS SECTIONAL VIEW

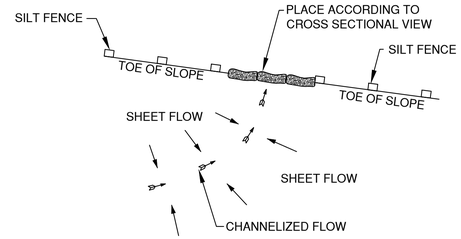

PLAN VIEW

COURSE AGGREGATE INFORMATION

SIEVE SIZE	SIZE NO. AASHTO No. 67 (1)
2 INCH (50 mm)	-
1 1/2 INCH (37.5mm)	-
1 INCH (25.0 mm)	100
3/4 INCH (19.0mm)	90-100
3/8 INCH (9.5mm)	20-55
No. 4 (4.75mm)	0-10
No. 8 (2.36mm)	0-5

(1) SIZE No. ACCORDING TO AASHTO M 43

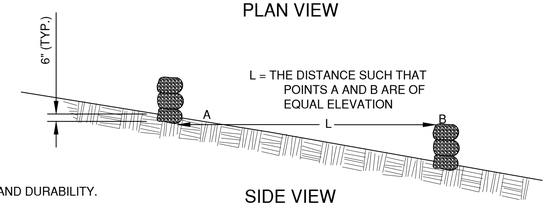

SIDE VIEW

DITCH CHECK DETAIL

NOTES:

18" X 30" ROCK FILLED FILTER BAG SHALL BE COMPRISED OF THE FOLLOWING:
HDPE HIGH DENSITY POLYETHYLENE
HDPE HIGH DENSITY POLYETHYLENE DRAW STRING KNITTED DIRECTLY INTO BAG OPENING.
80% FABRIC CLOSURE WITH APPARENT OPENING SIZE NO LARGER THAN 1/8 " X 1/8 "
ROLLED SEAM USING A MINIMUM OF 480 DENIER POLYESTER SEWING YARN FOR STRENGTH AND DURABILITY.

USE WELL GRADED COURSE AGGREGATE CONFORMING TO THE FOLLOWING GRADATION REQUIREMENTS

ROCK FILLED EROSION CONTROL BAGS
TYPE B

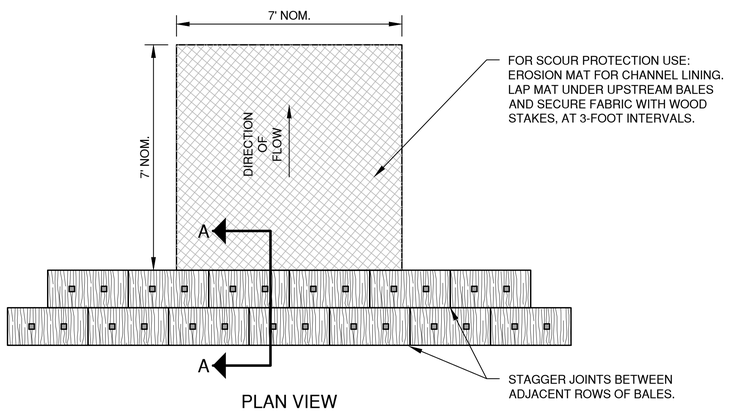

PLAN VIEW

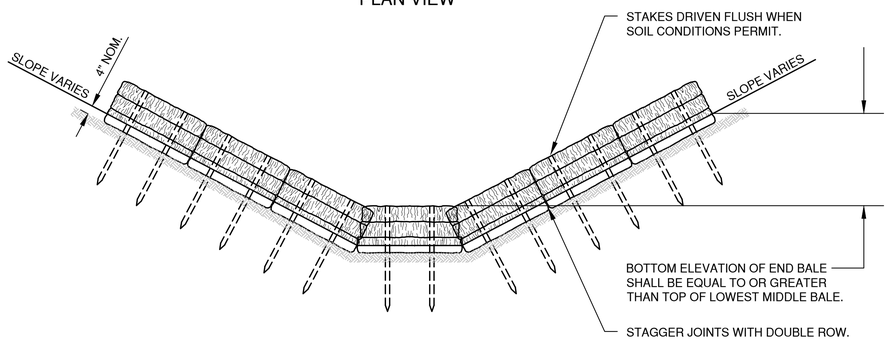

FRONT ELEVATION

TEMPORARY DITCH CHECK USING EROSION BALES
TYPE A

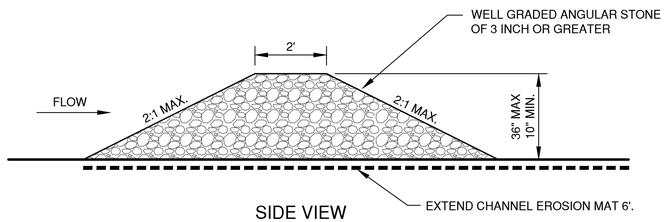

SIDE VIEW

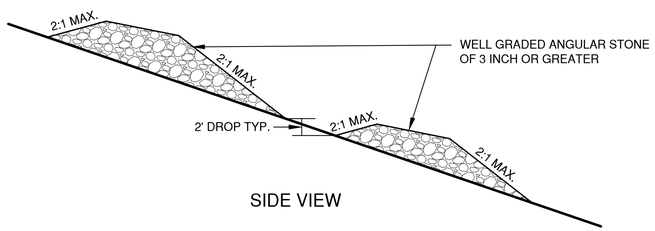

SIDE VIEW

TEMPORARY DITCH CHECK USING STONE
TYPE C

NO.	DATE	APPROV.	REVISION	NO.	DATE	APPROV.	REVISION

DRAWN LLP
CHECKED JGS
DESIGNED AJB

SKYLINE TOWERS
A DEVELOPMENT BY LEXINGTON HOMES
VILLAGE OF PLEASANT PRAIRIE
KENOSHA COUNTY, WISCONSIN

EROSION CONTROL
DITCH CHECK DETAILS

DATE 03/23/016
FILE EROSION CONTROL
JOB NO. 4329079

Robert E. Lee & Associates, Inc.
ENGINEERING, SURVEYING, ENVIRONMENTAL SERVICES
1250 CENTENNIAL CENTRE BOULEVARD HOBART, WI 54155
920-662-9641 www.releeinc.com
Celebrating 60 Years of Excellence

SHEET NO. 8

File: R:\4300\4329\4329079\dwg\EROSION CONTROL.dwg
Plot Date: Mar 23, 2016 - 3:48pm
LAYOUT: DITCH CHECKS
DITCH CHECKS

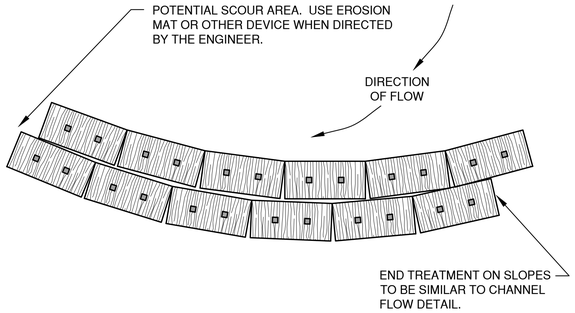

PLAN VIEW
(WHEN ALTERING THE DIRECTION OF FLOW)

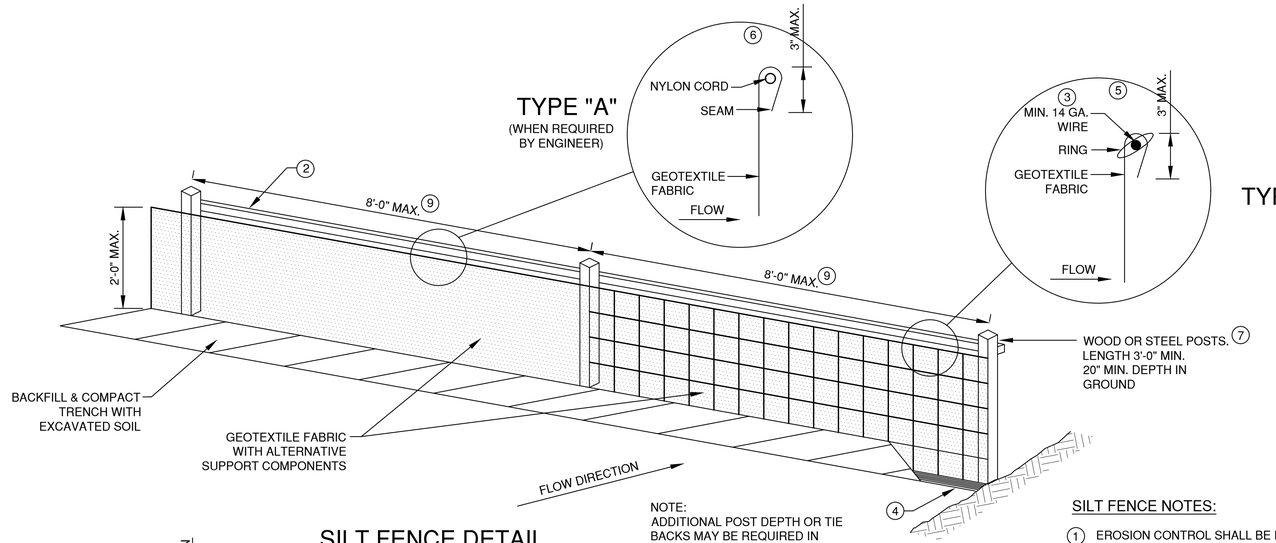

NOTE:
ADDITIONAL POST DEPTH OR TIE BACKS MAY BE REQUIRED IN UNSTABLE SOILS.

SILT FENCE DETAIL

SILT FENCE NOTES:

1. EROSION CONTROL SHALL BE PROVIDED IN ACCORDANCE WITH WDNR TECHNICAL STANDARD.
2. CROSS BRACE WITH 2" X 4" WOODEN FRAME OR EQUIVALENT AT TOP OF POSTS AS DIRECTED BY THE ENGINEER.
3. MINIMUM 14 GAUGE WIRE REQUIRED, FOLD FABRIC 3" OVER THE WIRE AND STAPLE OR PLACE WIRE RINGS ON 12" C.C.
4. EXCAVATE A TRENCH A MINIMUM OF 4" WIDE & 6" DEEP TO BURY AND ANCHOR THE GEOTEXTILE FABRIC. FOLD MATERIAL TO FIT TRENCH AND BACKFILL & COMPACT TRENCH WITH EXCAVATED SOIL.
5. WIRE SUPPORT FENCE SHALL BE 14 GAUGE MINIMUM WOVEN WIRE WITH A MAXIMUM MESH SPACING OF 6". SECURE TOP OF GEOTEXTILE FABRIC TO TOP OF FENCE WITH STAPLES OR WIRE RINGS AT 12" C.C. (TYPE B)
6. GEOTEXTILE FABRIC SHALL BE REINFORCED WITH AN INDUSTRIAL POLYPROPYLENE NETTING WITH A MAXIMUM MESH SPACING OF 3/4" OR EQUAL. A HEAVY DUTY NYLON TOP SUPPORT CORD OR EQUIVALENT IS REQUIRED. (TYPE A)
7. STEEL POSTS SHALL BE STUDDED "TEE" OR "U" TYPE WITH A MINIMUM WEIGHT OF 1.28 LBS./LIN. FT. (WITHOUT ANCHOR) FIN ANCHORS SUFFICIENT TO RESIST POST MOVEMENT ARE REQUIRED. WOOD POSTS SHALL BE A MINIMUM SIZE OF 1 1/8" X 1 1/8" OF OAK OR HICKORY.
8. CONSTRUCT SILT FENCE FROM A CONTINUOUS ROLL, IF POSSIBLE, BY CUTTING LENGTHS TO AVOID JOINTS. IF A JOINT IS NECESSARY, USE ONE OF THE FOLLOWING TWO METHODS: A.) TWIST METHOD -- OVERLAP THE END POSTS AND TWIST, OR ROTATE, AT LEAST 180 DEGREES, B:) HOOK METHOD -- HOOK THE END OF EACH SILT FENCE LENGTH.
9. THE MAXIMUM SPACING OF POSTS FOR WOVEN FABRIC SILT FENCE SHALL BE 8 FEET AND FOR NON-WOVEN FABRIC, 3 FEET.

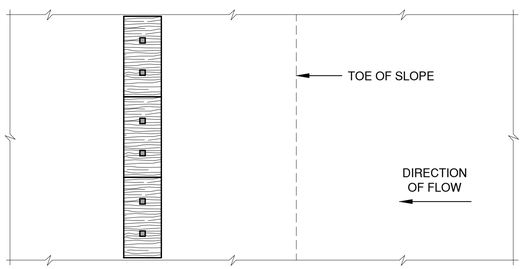

PLAN VIEW

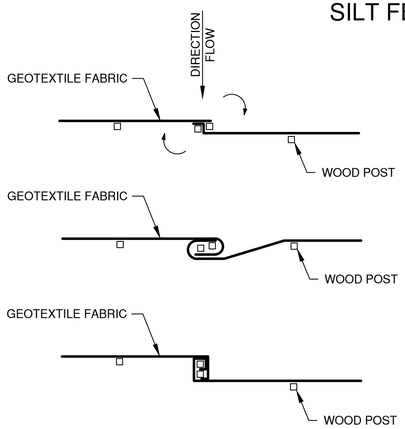

TWIST METHOD 8

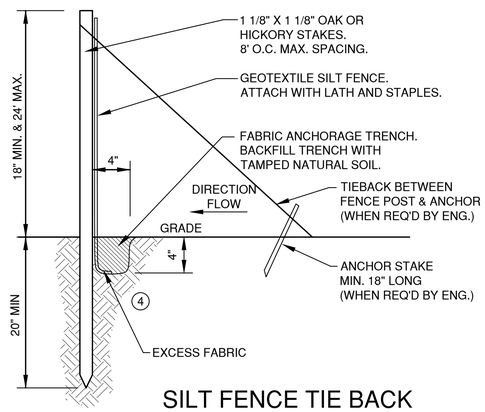

SILT FENCE TIE BACK

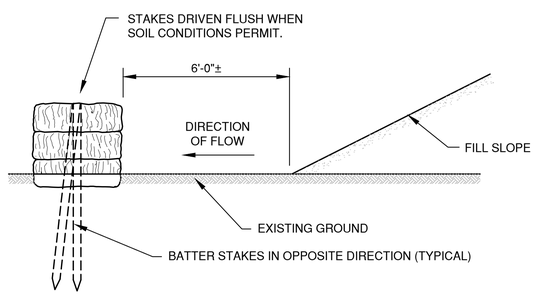

FRONT ELEVATION
WHEN EXISTING GROUND SLOPES AWAY FROM FILL SLOPE

EROSION BALES FOR SHEET FLOW

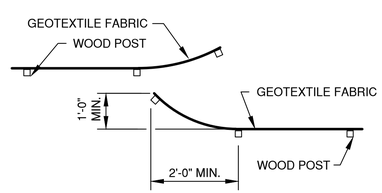

HOOK METHOD 8

JOINING TWO LENGTHS OF SILT FENCE

EROSION CONTROL SHEET FLOW NOTES:

1. ANY SOIL STOCKPILED THAT REMAINS FOR MORE THAN 7 DAYS SHALL BE COVERED OR TREATED WITH STABILIZATION PRACTICES SUCH AS TEMPORARY OR PERMANENT SEEDING AND MULCHING.
2. A MINIMUM OF 4 INCHES OF TOPSOIL MUST BE APPLIED TO ALL AREAS TO BE SEEDED OR SODDED.
3. ALL WASTE AND UNUSED BUILDING MATERIALS (INCLUDING GARBAGE, DEBRIS, CLEANING WASTES, WASTEWATER, TOXIC MATERIALS, OR HAZARDOUS MATERIALS) SHALL BE PROPERLY DISPOSED OF AND NOT ALLOWED TO BE CARRIED OFF-SITE BY RUNOFF OR WIND.
4. ALL OFF-SITE SEDIMENT DEPOSITS OCCURRING AS A RESULT OF CONSTRUCTION WORK OR A STORM EVENT SHALL BE CLEANED UP BY THE END OF EACH DAY. **FLUSHING SHALL NOT BE ALLOWED.**
5. ANY SOIL EROSION THAT OCCURS AFTER FINAL GRADING AND/OR THE APPLICATION OF STABILIZATION MEASURES MUST BE REPAIRED AND THE STABILIZATION WORK REDONE.
6. FOR ANY DISTURBED AREA THAT REMAINS INACTIVE FOR GREATER THAN 7 WORKING DAYS, OR WHERE GRADING WORK EXTENDS BEYOND THE PERMANENT SEEDING DEADLINES, THE SITE MUST BE TREATED WITH TEMPORARY STABILIZATION MEASURES SUCH AS SOIL TREATMENT, TEMPORARY SEEDING AND/OR MULCHING.
7. ALL TEMPORARY EROSION CONTROL PRACTICES SHALL BE MAINTAINED UNTIL THE SITE IS STABILIZED WITH 70% VEGETATION AND A NOTICE OF TERMINATION HAS BEEN APPROVED BY THE DNR.
8. WIND EROSION SHALL BE KEPT TO A MINIMUM DURING CONSTRUCTION. WATERING, MULCH OR A TACKING AGENT MAY NEED TO BE UTILIZED TO PROTECT NEARBY RESIDENCES/WATER RESOURCES.
9. CONTRACTOR RESPONSIBLE FOR MAINTAINING ALL THE EROSION CONTROL MEASURES IN CONFORMANCE WITH THE WDNR CONSERVATION PRACTICE STANDARDS, LATEST EDITION.
10. UPON COMPLETION OF STORM INLET CONSTRUCTION, INSTALL STORM DRAIN INLET PROTECTION FOR CONSTRUCTION SITE AS SPECIFIED.
11. FINE SEDIMENT ACCUMULATIONS SHALL BE CLEANED FROM STREETS, PRIVATE DRIVES, OR PARKING AREAS BY MANUAL OR MECHANICAL SWEEPING A MINIMUM OF ONCE PER WEEK AND BEFORE ALL IMMINENT RAINS.
12. EROSION AND SEDIMENT CONTROL STRUCTURES SHALL BE INSPECTED WEEKLY AND WITHIN 24 HOURS OF RAINFALL OF 0.5 INCH OR MORE.

File: R:\4300\4329\4329079\dwg\EROSION CONTROL.dwg
Plot Date: Mar 23, 2016 - 7:49am
LAYOUT: SHEET FLOW
SHEET FLOW

NO.	DATE	APPROV.	REVISION	NO.	DATE	APPROV.	REVISION

DRAWN LLP
CHECKED JGS
DESIGNED AJB

SKYLINE TOWERS
A DEVELOPMENT BY LEXINGTON HOMES
VILLAGE OF PLEASANT PRAIRIE
KENOSHA COUNTY, WISCONSIN

EROSION CONTROL
SHEET FLOW DETAILS

DATE 03232016
FILE EROSION CONTROL
JOB NO. 4329079

Robert E. Lee & Associates, Inc.
ENGINEERING, SURVEYING, ENVIRONMENTAL SERVICES
1250 CENTENNIAL CENTRE BOULEVARD HOBART, WI 54155
920-662-9641 www.releeinc.com
Celebrating 60 Years of Excellence

Proposed New 60 unit Apartment Homes With Lower Level Parking

LEXINGTON HOMES

BUILDING CODE INFORMATION 2009 IBC (WISCONSIN)

CODE CHAPTER	CODE TITLE	CODE CHAPTER	CODE INFORMATION
3	USE AND OCCUPANCY	310.1	R-2 RESIDENTIAL, FIRST FLOOR THROUGH FOURTH FLOOR - S-2 STORAGE LOWER LEVEL
4	PARKING GARAGES	406.2	ENCLOSED PARKING GARAGE, NOT HEATED, VENTILATED, NON-SEPARATED OCCUPANCIES, 508.3
5	ALLOWABLE AREA SPRINKLER INCREASE BUILDING AREA MODIFICATIONS	503 504.2 506.2 506.3	TYPE VA, 3 STORIES AND 12,000 S.F. PER FLOOR, 50' HEIGHT FOR R-2 UP TO 60' HEIGHT AND 4 STORIES - 50'-4" ACTUAL AREA INCREASE DUE TO FRONTAGES USED (30' SIDES) (30' FRONT AND BACK) AND SPRINKLER INCREASE = 45,000 S.F. PER FLOOR ALLOWABLE - 26,810 ACTUAL MAX. S.F.
	SEPARATED OCCUPANCY	508.3 509.4	PARKING GARAGE 1 HOUR SEPARATION WITH AUTOMATIC SPRINKLER SYSTEM ALLOWABLE FLOORS MEASURED FROM ABOVE THE PARKING GARAGE
6	CONSTRUCTION TYPE	601	VA WOOD FRAME PROTECTED, 1 HOUR RATING AT ALL BEARING WALLS, PRIMARY STRUCTURAL FRAME, FLOOR CONSTRUCTION AND ATTIC CEILING. SEE 705 FOR EXTERIOR WALLS. IN THE PARKING GARAGE EXPOSED WOOD CONSTRUCTION ALLOWED, NO RATING IS REQUIRED IN NON-BEARING INTERIOR PARTITIONS
	SEPARATION DISTANCE	602	sub. (.) HEAVY TIMBER SHALL BE ALLOWED IN THE ROOF CONSTRUCTION WHERE 1 HOUR RATING IS REQUIRED. ALL EXTERIOR WALLS MORE THAN 10' FROM IMAGINARY PROPERTY LINES
7	RATED CONSTRUCTION	704.2 & 704.3	COLUMN PROTECTION AND PRIMARY STRUCTURAL FRAME MUST HAVE INDIVIDUAL ENCASEMENT WHEN OVER TWO FLOORS.
	FIRE BARRIERS	705.5	FIRE RESISTANCE RATING OF EXTERIOR WALLS RATED FOR EXPOSURE FROM INSIDE
	SHAFT ENCLOSURES	707 708.1 708.4	FIRE BARRIERS REQUIRED AT EXIT ENCLOSURE, SEE 1022 SHAFT ENCLOSURES CONNECTING FOUR OR MORE STORIES SHALL BE 2 HOUR RATED ELEVATOR HOISTWAY SHALL BE CONSTRUCTED AS A SHAFT ENCLOSURE
	ELEVATORS AND HOISTWAYS	708.12	ENCLOSURE AT THE TOP REQUIRED IF SHAFT DOES NOT EXTEND TO THE UNDERSIDE OF THE ROOF SHEATHING
		708.14 708.14.1 708.14.1.1	ELEVATOR LOBBY REQUIRED, CAN NOT CONNECT MORE THAN 3 STORIES, RATED FIRE PARTITION WALLS NO AREA OF REFUGE REQUIRED - PER SECTION 1007
	FIRE PARTITIONS CONTINUITY HORIZONTAL ASSEMBLY	709	½ HOUR FIRE PARTITION AT CORRIDORS (NON-BEARING WALL) (1018.1) 1 HOUR FIRE PARTITIONS AT DWELLING UNIT SEPARATIONS
		712	1 HOUR ASSEMBLY BETWEEN UNITS AT FLOOR / CEILING.
	FIRE DOOR RATINGS	715.4	FIRE DOORS AT ELEVATOR LOBBY 20 MINUTE REQUIRED AND SMOKE AND DRAFT CONTROL. FIRE DOORS AT EXIT ENCLOSURES 90 MINUTE REQUIRED AT CORRIDOR WALLS TO DWELLING UNIT - 1/3 HOUR REQ.
		716	AT EXTERIOR WALLS NOT WITHIN OPENING PROTECTIVE DISTANCE ENSURE DRYER EXHAUST (VENT) LENGTH IS NOT EXCEEDED, USE A 4" EXTERIOR HOOD AS NEEDED. EXHAUST FAN PENETRATION DOES NOT REQUIRE A RADIATION DAMPER NOR PLACEMENT IN A WALL CAVITY, FIRE STOP ANNULAR SPACE AROUND THE FAN BOX. STAY WITHIN DWELLING UNIT AND DO NOT PLACE DUCT WITHIN 4'-0" OF A FIRE SEPARATION WALL.
	DRAFTSTOPPING	717.3.2 (1) 717.4.2 (2)	DRAFTSTOPPING IN FLOOR CEILING SYSTEM NOT REQUIRED IN BUILDINGS WITH AUTOMATIC SPRINKLER SYSTEM
	INTERIOR FINISHES		DRAFTSTOPPING IN ATTIC NOT REQUIRED IN BUILDINGS WITH AUTOMATIC SPRINKLER SYSTEM
8	FIRE PROTECTION	803.9	CLASS C FLAME SPREAD 75-20, CORRIDORS (SPRINKLERED) CLASS C FLAME SPREAD 75-20, ALL ROOMS (SPRINKLERED)
9	FIRE ALARM	903.2.8 & 903.2.10 903.3.1.1	NFPA 13 IN PARKING AREA, 1 HOUR SEPARATION REQUIRED NFPA 13 SPRINKLER SYSTEM REQ. FOR ALL RESIDENTIAL FLOORS INCLUDING BALCONIES AND DECKS
	SMOKE DETECTION	907.2.9.1	MANUAL FIRE ALARM SYSTEM FOR ANY BUILDING WITH MORE THAN 16 UNITS OR EXCEPTION 2
		907.11.2	INTERCONNECTED SMOKE DETECTORS / ALARMS REQ. / VISIBLE ALARM CAPABILITY
10	MEANS OF EGRESS	1004.1.1 1005	OCCUPANT LOAD = 200 S.F. GROSS RESIDENTIAL AND 300 S.F. GROSS ACCESSORY STORAGE EGRESS WIDTH OF .2 AND .3 TOTAL LOWER STAIR WIDTH FACTOR = 30" DIVIDED BY TWO STAIRS (EACH 60") TOTAL UPPER STAIR WIDTH FACTOR = 63" DIVIDED BY TWO STAIRS (EACH 60") OTHER EGRESS COMPONENT WIDTH FACTOR LOWER = 20" DIVIDED BY TWO = 10" OTHER EGRESS COMPONENT WIDTH FACTOR FIRST FLOOR = 31" DIVIDED BY THREE = 10" OTHER EGRESS COMPONENT WIDTH FACTOR SECOND FLOOR = 42" DIVIDED BY TWO = 21"
	EGRESS ILLUMINATION STAIRWAYS	1006 1007.3	MEANS OF EGRESS ILLUMINATION REQ. IN CORRIDOR AND EXIT ENCLOSURE AREA OF REFUGE (STAIRS) EXCEPTION #2: CLEAR WIDTH OF 48" IS NOT REQUIRED WITH AUTOMATIC SPRINKLERS EXCEPTION #3: NOT REQUIRED IN BUILDINGS EQUIPPED WITH AUTOMATIC SPRINKLERS
	ELEVATORS	1007.4	INSTALLED IN ACCORDANCE WITH SECTION 903.3.1.1 OR 903.3.1.2 AREA OF REFUGE (ELEVATOR) EXCEPTION #2: NOT REQUIRED IN BUILDINGS EQUIPPED WITH AUTOMATIC SPRINKLERS
		1008.1.7	INSTALLED IN ACCORDANCE WITH SECTION 903.3.1.1 OR 903.3.1.2 FLOOR ELEVATION, EXCEPTION 5. EXTERIOR PATIOS, TYPE B DWELLING - IMPERVIOUS SURFACE NOT MORE THAN 4" BELOW INTERIOR FLOOR
	COMMON PATH OF TRAVEL	1014.3 1016.1	THRESHOLDS. 3/4" FOR SLIDING DOORS OR 1/2" FOR OTHER DOORS 125' TRAVEL DISTANCE NOT EXCEEDED FROM FURTHEST POINT OF ANY UNIT (SPRINKLERED) TRAVEL OF 250' ON UNENCLOSED EXIT ACCESS INCLUDES DISTANCE DOWN THE STAIRS. 250' DISTANCE NOT EXCEEDED TO EITHER EXIT ENCLOSURE OR EXIT.
	CORRIDOR FIRE RESISTANCE RATING	1081.1 1018.4 1021	RATING REQ. WITH 13 SPRINKLER SYSTEM = ½ HOUR, 44" MINIMUM WIDTH OR PER ABOVE. DEAD END 50' WITH SPRINKLER SYSTEM NUMBER OF EXITS; 2 PER FLOOR REQUIRED
		1022	EXIT ENCLOSURE TWO HOUR RATED WHEN CONNECTING FOUR OR MORE STORIES
11	ACCESSIBILITY	1104	ACCESSIBLE ROUTE TO ALL FRONT DOORS. ALL FIRST, SECOND AND THIRD FLOOR 3/0 UNIT DOORS AND PATIO DOORS ACCESSIBLE
	PARKING SPACES DWELLING UNITS	1106.2 1107.6.2.1.1	GROUP R-2, 2% BUT NOT LESS THAN 1 OCCUPANCIES CONTAINING MORE THAN 20 DWELLINGS, AT LEAST 2% SHALL BE A TYPE "A" UNIT. ALL UNITS ON SITE SHALL BE CONSIDERED TO DETERMINE THE TOTAL NUMBER OF UNITS. UNITS SHALL BE DISPERSED AMONG CLASSES OF UNITS. TWO TYPE "A" UNITS ARE IN EACH OF THE 60 UNIT BUILDINGS
	ACCESSIBLE UNITS	1107.6.2.1.2 1107.7.2	ALL UNITS WITH ELEVATOR SERVICE ARE TYPE "B" ACCESSIBLE. IN MULTISTORY UNITS; THE FIRST FLOOR IS TYPE "B" ACCESSIBLE.
12	INTERIOR ENVIRONMENT	1203	NATURAL VENTILATION = 4% OF FLOOR SPACE INCLUDING ADJOINING SPACES NATURAL LIGHT = 8%
		1207.2	AIR-BORNE SOUND. WALLS, PARTITIONS AND FLOOR/CEILING ASSEMBLIES SEPARATING DWELLING UNITS FROM EACH OTHER OR FROM PUBLIC OR SERVICE AREAS SHALL HAVE A SOUND TRANSMISSION CLASS (STC) OF NOT LESS THAN 50 (45 IF FIELD TESTED)
		1207.3	STRUCTURE-BORNE SOUND. FLOOR/CEILING ASSEMBLIES BETWEEN DWELLING UNITS OR BETWEEN A DWELLING UNIT AND PUBLIC OR SERVICE AREA WITHIN THE STRUCTURE SHALL HAVE AN INSULATION IMPACT CLASS (IIC) OF NOT LESS THAN 50 (45 IF FIELD TESTED)
14	BALCONIES	1406.3	(EXCEPTION 3) BALCONIES ON BUILDINGS OF TYPE VB CONSTRUCTION HAVE NO REQ. FIRE RESISTANCE RATING WHERE SPRINKLER PROTECTION IS EXTENDED TO THIS AREA.

L E G E N D

SYMBOL	ITEM	SYMBOL	ITEM
p3	WALL TYPE - REFER TO WALL TYPES	1	PLAN NOTE
X / A.X.X	WALL SECTION REFERENCE OR DETAIL CUT - REFER TO SHEET NUMBER INDICATED IN BOTTOM OF SYMBOL	4	REVISION MARK - REFER TO TITLE BLOCK FOR REVISION DATE
		H-##	SCHEDULED NOTE LIKE WALL HEIGHT OR ROOF TRUSS HEEL HEIGHT
			ELEVATION REFERENCE
		3	ACCESSIBILITY PLAN NOTE

SYMBOL	ITEM	ITEM DESCRIPTION
S	SMOKE DETECTOR	IBC 907.2 - SINGLE AND MULTIPLE STATION SMOKE ALARMS SHALL BE INSTALLED IN ACCORDANCE WITH THE PROVISIONS OF THIS CODE AND THE HOUSEHOLD FIRE-WARNING EQUIPMENT PROVISIONS OF NFPA 72.
	BATH FAN	BATH FANS ARE TO BE IN ROOMS CONTAINING ANY BATHING FIXTURES, BATHTUBS, SHOWERS OR SPA. IBC 1203.4.2.1
	VINYL WINDOW	LOW E, DOUBLE PANE GLASS, GLAZING, MINIMUM ASSEMBLY U-VALUE = .30 ALL EXTERIOR WINDOWS ARE CENTERED BETWEEN A ROOM'S WALLS UNLESS NOTED BY A DIMENSION.
	FLOOR COVERING TRANSITION LINE	

National Electrical Code

CODE CHAPTER	CODE TITLE	CODE CHAPTER	CODE INFORMATION
110	REQUIREMENTS FOR ELECTRICAL INSTALLATION	110.26	SUFFICIENT WORKING SPACE SHALL BE PROVIDED AROUND ELECTRICAL EQUIPMENT [PANELS]. THE DEPTH OF THE SPACE IN THE DIRECTION OF ACCESS TO LIVE PARTS SHALL BE A MINIMUM OF 3 FEET. THE MINIMUM WIDTH OF THE SPACE IN FRONT OF ELECTRICAL EQUIPMENT SHALL BE THE WIDTH OF THE EQUIPMENT OR 30 INCHES, WHICH EVER IS GREATER. THIS WORK SPACE SHALL BE CLEAR AND EXTEND FROM THE FLOOR TO A HEIGHT OF 6.5 FEET. THIS SPACE SHALL NOT BE USED FOR STORAGE.
210	DECKS AND PORCHES	210.52(E)(3)	DECKS AND PORCHES ACCESSIBLE FROM AN INTERIOR DWELLING UNIT SHALL HAVE ONE RECEPTACLE.
240	OVERCURRENT PROTECTION	240.24(d)	OVERCURRENT DEVICES (ELECTRICAL PANELS) SHALL NOT BE LOCATED IN THE VICINITY OF EASILY IGNITABLE MATERIALS, SUCH AS CLOTHES CLOSETS.

GENERAL NOTES;

1. ALL MATERIALS, WORKMANSHIP AND DETAILS SHALL CONFORM TO THE REQUIREMENTS OF 2009 IBC (WISCONSIN).
2. THE CONTRACTOR SHALL FAMILIARIZE THEMSELVES WITH ALL ARCHITECTURAL, STRUCTURAL, MECHANICAL AND SPRINKLER DRAWINGS TO VERIFY THE LOCATION AND DIMENSIONS OF CHASES, INSERTS, OPENINGS, TOILETS, TRUSSES AND OTHER PROJECT REQUIREMENTS.
3. CONTRACTOR SHALL FIELD VERIFY ALL DIMENSIONS, ELEVATIONS AND CONDITIONS AND NOTIFY ARCHITECT OF ANY DISCREPANCIES.
4. THE TYPICAL DETAILS SHOWN ON THE DRAWINGS SHALL BE APPLICABLE TO ALL PARTS OF THE CONTRACT DRAWINGS UNLESS SPECIFICALLY NOTED OTHERWISE.
5. THE CONTRACTOR SHALL BE SOLELY RESPONSIBLE FOR JOB SAFETY DURING CONSTRUCTION.
6. ALL FRAMING IS 24" O.C. AND ALL EXTERIOR WALLS HAVE 16" O.C. STUDS.
7. WINDOWS ARE TO PROVIDE EMERGENCY ESCAPE AND RESCUE OPENINGS AT ALL BEDROOMS WITH CLEAR OPENING MAXIMUM 44" A.F.F. (IBC 1026)

SPRINKLER FIRE SUPPRESSION NOTES;

1. TREY CEILINGS UNDER 100 CUBIC FEET AND LESS THAN 12" DEEP DO NOT REQUIRE COVERAGE.
2. 4'-0" EAVE ALLOWABLE WITH 13 SPRINKLER COVERAGE, 2' EAVE IF 13R COVERAGE.
3. FIRE ACCESS PER CHAPTER 13.
4. INSULATION BLOWN FULL IN MANY FLOOR AND ROOF CAVITIES, NO CONCEALED SPACE.
5.

INDEX TO DRAWINGS

T1.1	TITLE SHEET
T1.2	U.L. LISTINGS AND REFERENCE MEATERIAL
T2.1	LIFE SAFETY PLANS
T2.2	LIFE SAFETY PLANS
C1	SITE PLAN
A1.1	ELEVATIONS
A1.2	ELEVATIONS
A1.3	ELEVATIONS
A1.4	COURTYARD ELEVATIONS
A2	PLAN NOTES AND SCHEDULES
A2.0.1	UNDERGROUND PARKING PLAN
A2.1.1	COMPOSITE FIRST FLOOR PLAN
A2.1.2	PARTIAL FIRST FLOOR PLAN
A2.1.3	PARTIAL FIRST FLOOR PLAN
A2.2.1	COMPOSITE SECOND FLOOR PLAN
A2.2.2	PARTIAL SECOND FLOOR PLAN
A2.2.3	PARTIAL SECOND FLOOR PLAN
A2.3.1	COMPOSITE THIRD FLOOR PLAN
A2.3.2	PARTIAL THIRD FLOOR PLAN
A2.3.3	PARTIAL THIRD FLOOR PLAN
A2.4.1	COMPOSITE LOFT FLOOR PLAN
A2.4.2	LOFT FLOOR PLAN
A2.5.1	LOWER ROOF PLAN
A2.5.2	UPPER ROOF PLAN
A3.1	BUILDING SECTION AND ELEVATOR
A3.2	BUILDING SECTIONS
A3.3	BUILDING SECTIONS AND STAIRS
A4.1	ACCESSIBILITY PLANS, NOTES AND DETAILS
A4.2	DETAILS
S1.1	STRUCTURAL - NOTES AND SCHEDULES
S2.1	STRUCTURAL - PARTIAL FOUNDATION PLAN
S2.2	STRUCTURAL - PARTIAL FOUNDATION PLAN
S2.3	STRUCTURAL - PARTIAL FIRST FLOOR FRAMING
S2.4	STRUCTURAL - PARTIAL FIRST FLOOR FRAMING
S2.5	STRUCTURAL - PARTIAL SECOND FLOOR FRAMING
S2.6	STRUCTURAL - PARTIAL SECOND FLOOR FRAMING
S2.7	STRUCTURAL - PARTIAL LOFT FLOOR FRAMING
S2.8	STRUCTURAL - PARTIAL LOFT FLOOR FRAMING
S2.9	STRUCTURAL - PARTIAL ROOF FRAMING
S2.10	STRUCTURAL - PARTIAL ROOF FRAMING
S3.1	STRUCTURAL - BUILDING SECTIONS
S4.1	STRUCTURAL - FOUNDATION DETAILS
S4.2	STRUCTURAL - FRAMING DETAILS

60 UNIT BUILDING AREA DATA

FLOOR	SQUARE FOOTAGE WITHIN DWELLING UNITS	SQUARE FOOTAGE NON-DWELLING UNITS	TOTAL SQUARE FOOTAGE PER FLOOR
0	0	25,804	25,804
1	23,155	3,655	26,810
2	23,446	3,364	26,810
3	14,263	2,537	16,800
LOFT	7,133	0	7,133
TOTALS	67,997	35,360	103,357

LaPlant Architecture, LLC
OFFICE:926 WILLARD DRIVE
GREEN BAY, WISCONSIN
MAILING: 1592 RUSTIC WAY
GREEN BAY, WISCONSIN 54313
Telephone: (920) 737-9769
EMAIL: laplantarchitecture@yahoo.com

© LaPlant Architecture LLC 2015

REVISION	DATE
X	XX

DATE 3/17/2016

PROJECT NO. 461462

SHEET T 1.1

1 U.L. Design No. L528

Unrestrained Assembly Rating - 1 Hour

(1) FLOOR SYSTEM 2. MIN. 3/4" GYPSUM CONCRETE OVER, 23/32 in. THICK T&G WOOD STRUCTURAL PANELS w/ STRENGTH AXIS OF PANEL TO BE PERPENDICULAR TO TRUSSES w/ JOINTS STAGGERED, SECURE TO TRUSSES w/ CONSTRUCTION ADHESIVE AND 8d NAILS SPACED 12 in. O.C. ALONG EACH TRUSS.
(2) PARALLEL CHORD TRUSSES 24 in. O.C. MAX.
(3) FURRING CHANNELS - $\frac{3}{4}$" DEEP BY 2 $\frac{1}{16}$" WIDE 25 GAUGE GALVANIZED STEEL.
(3B) ATTACHMENT OF FURRING CHANNELS, CLIPS SPACED 48" O.C. SECURED TO ALTERNATING TRUSSES. USE No. 8 x 2 $\frac{1}{2}$" COURSE DRYWALL SCREW. FURRING CHANNEL IS FRICTION FITTED INTO CLIPS. ADJOINING CHANNELS OVERLAPPED.
(4) PROPRIETARY TYPE "C" GYPSUM - 5/8 in. THICK, 4 ft. WIDE SHEETS INSTALLED w/ LONG DIMENSION PERPENDICULAR TO FURRING CHANNELS w/ 1 in. LONG WALLBOARD SCREWS SPACED 12 in. O.C. END JOINTS SECURED TO BOTH CHANNELS.
(5) FINISHING SYSTEM - JOINT COMPOUND APPLIED IN TWO COATS TO SCREW HEADS, SEAMS WITH PAPER TAPE EMBEDDED IN FIRST COAT OF COMPOUND.
(6) OPTIONAL INSULATION SYSTEM USED. IF BIB INSULATION USED, MUST NOT BEAR LOAD ONTO CHANNEL OR GYPSUM BOARD. FIBER REINFORCED POLY STAPLED TO TRUSSES TO SUPPORT INSULATION.

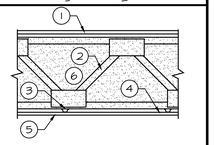

2 GA FILE NO. FC 5518 WOOD TRUSSES, GYPSUM WALLBOARD

1 HOUR FIRE

(1) 3/4" PROPRIETARY GYPSUM FLOOR TOPPING (2) FLOORING SYSTEM - 23/32 in. THICK T&G WOOD STRUCTURAL PANELS w/ FACE GRAIN OF PLYWOOD OR STRENGTH AXIS OF PANEL TO BE PERPENDICULAR TO TRUSSES w/ JOINTS STAGGERED, SECURE TO TRUSSES w/ CONSTRUCTION ADHESIVE AND 6d RING SHANK NAILS. NAILS SPACED 12 in. O.C. ALONG EACH TRUSS. (3) 18" DEEP PARALLEL CHORD TRUSSES 24 in. O.C. MAX. (4) BIB INSULATION (5) RESILIENT CHANNELS - SPACED 12 in. O.C. PERPENDICULAR TO TRUSSES. CHANNELS SECURED TO EACH TRUSS w/ TYPE S, 1 1/4 in. LONG STEEL SCREW (6) PROPRIETARY TYPE "X" GYPSUM - 5/8 in. THICK, 4 ft. WIDE SHEETS INSTALLED w/ LONG DIMENSION PERPENDICULAR TO FURRING OR RESILIENT CHANNELS w/ 1 in. LONG WALLBOARD SCREWS SPACED 8 in. O.C.

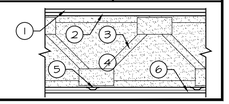

3 IBC 720.1(3) MINIMUM PROTECTION FOR FLOOR AND ROOF SYSTEMS a,q

1 HR FIRE (ASSEMBLY)
66 MIN. FINISH RATING

FLOOR OR ROOF CONSTRUCTION	ITEM NUMBER	CEILING CONSTRUCTION	THICKNESS OF FLOOR OR ROOF SLAB (INCHES) 3 HOUR	2 HOUR	1 HOUR	MINIMUM THICKNESS OF CEILING (INCHES) 3 HOUR	2 HOUR	1 HOUR
21. WOOD JOISTS, FLOOR TRUSSES AND FLAT OR PITCHED ROOF TRUSSES SPACED A MAXIMUM 24" O.C. WITH MIN. 1/2" WOOD STRUCTURAL PANELS WITH EXTERIOR GLUE APPLIED AT RIGHT ANGLES TO TOP OF JOIST OR TOP CHORD OF TRUSSES WITH 8d NAILS. THE WOOD STRUCTURAL PANEL THICKNESS SHALL NOT BE LESS THAN NOMINAL 1/2" LESS THAN REQUIRED BY CHAPT. 23.	21-1.1	BASE LAYER: 5/8" TYPE "X" GYPSUM WALLBOARD APPLIED AT RIGHT ANGLES TO JOIST OR TRUSS @ 24" O.C., MAX., WITH 1 1/4" TYPE "S" OR TYPE "W" DRYWALL SCREWS @ 24" O.C. FACE LAYER: 5/8" TYPE "X" GYPSUM WALLBOARD OR VENEER BASE APPLIED AT RIGHT ANGLES TO JOIST OR TRUSS THROUGH BASE LAYER WITH 1 7/8" TYPE "S" OR TYPE "W" DRYWALL SCREWS @ 12" O.C. AT JOINTS AND INTERMEDIATE JOIST OR TRUSS. FACE LAYER TYPE "G" DRYWALL SCREWS PLACED 2" BACK ON EITHER SIDE OF FACE LAYER END JOINTS, 12" O.C.	---	---	VAR.	---	---	1 1/4"

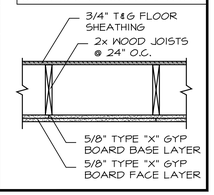

4 IBC 720.1(2) RATED FIRE-RESISTANCE PERIODS FOR WALLS AND PARTITIONS a,o,p

1 HOUR FIRE

MATERIAL	ITEM NUMBER	CONSTRUCTION	MINIMUM FINISHED THICKNESS FACE TO FACE (INCHES) 4 HR	3 HR	2 HR	1 HR
14. WOOD STUDS - INTERIOR PARTITION WITH GYPSUM WALLBOARD EACH SIDE	14-1.3 l,m	2" x 4" WOOD STUDS 24" ON CENTER, MAX., WITH 5/8" TYPE "X" GYPSUM WALLBOARD APPLIED VERTICALLY OR HORIZONTALLY WITH 6d NAILS AT 7" ON CENTER WITH END JOINTS ON FRAMING MEMBERS. STAGGER JOINTS EACH SIDE.	---	---	---	4 3/4"

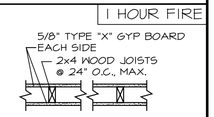

5 UL DESIGN NO. U341 RATED FIRE-RESISTANCE FOR BEARING WALL

1 HOUR FIRE

MATERIAL	CONSTRUCTION
BEARING WALL RATING - WOOD STUD WALL and GYPSUM BOARD	1 2"x4" WOOD STUDS 24" O.C. MAX. CROSS BRACED AT MID-HEIGHT AND EFFECTIVELY FIRESTOPPED AT TOP AND BOTTOM OF WALL. 2 5/8" TYPE "X" GYPSUM WALLBOARD, 4 FT. WIDE, NAILED TO STUDS AND BEARING PLATES 7 IN. O.C. w/ 6d CEMENT COATED NAILS 1-7/8 IN. LONG, 0.0915 IN. SHANK DIA. AND 1/4 IN DIA. HEAD 3 JOINTS AND NAILHEADS- WALLBOARD JOINTS COVERED w. PAPER TAPE AND JOINT COMPOUND. NAILHEADS COVERED w/ JOINT COMPOUND. 4 SHEATHING (OPTIONAL)- SEPTUM MAY BE SHEATHED w/ MIN. 7/16 IN. THICK APA RATED SHEATHING WOOD STRUCTURAL PANELS OR MIN. 1/2 IN. THICK MINERAL AND FIBER BOARD 5 BATT INSULATION - 3-1/2" MAX THICKNESS GLASS OR MINERAL FIBER BATT INSULATION. OPTIONAL IF SHEATHING IS USED ON BOTH HALVES OF WALL.

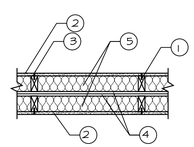

6 IBC 720.1(2) RATED FIRE-RESISTANCE PERIODS FOR WALLS AND PARTITIONS a,o,p

1 HOUR FIRE

MATERIAL	ITEM NUMBER	CONSTRUCTION	MINIMUM FINISHED THICKNESS FACE TO FACE (INCHES) 4 HR	3 HR	2 HR	1 HR
16. EXTERIOR WALLS RATED FOR FIRE RESISTANCE FROM THE INSIDE ONLY IN ACCORDANCE WITH SECTION 704.5	16-1.3	2" x 6" WOOD STUDS 16" ON CENTER WITH $\frac{5}{8}$" TYPE X GYPSUM WALLBOARD APPLIED VERTICALLY WITH ALL JOINTS OVER FRAMING OR BLOCKING AND FASTENED WITH 2 $\frac{1}{4}$" TYPE S DRYWALL SCREWS 7" O.C. JOINTS TAPED AND MUDDED. EXTERIOR COVERED WITH $\frac{7}{16}$" OSB APPLIED VERTICALLY WITH ALL JOINTS OVER FRAMING OR BLOCKING AND FASTENED WITH 6d NAILS @ 12" O.C. IN FIELD OR 6" O.C. EDGES. R19 FIBERGLASS INSULATION.	---	---	---	6 1/2"

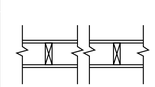

11 UL DESIGN NO. U301 BEARING WALL RATING

2 HOUR FIRE
66 MIN. FINISH

MATERIAL	CONSTRUCTION
WOOD STUD AND GYPSUM BOARD INTERIOR PARTITION	1. 2x4 WOOD STUDS @ 16 in. O.C., FIRESTOPPED 2. NAILHEADS- (NOT SHOWN) EXPOSED OR COVERED w/ JOINT COMPOUND 3. JOINTS- EXPOSED OR COVERED w/ FIBER TAPE AND JOINT COMPOUND 4. NAILS- (NOT SHOWN) 6d CEMENT COATED NAILS; 1-7/8 IN. LONG, 0.0915 IN. SHANK DIAMETER, 1/4 IN. DIAMETER HEADS AND 8d CEMENT COATED NAILS; 2-3/8 IN. LONG, 0.113 IN. SHANK DIAMETER, 9/32 IN. DIAMETER HEADS 5. GYPSUM WALLBOARD- TWO LAYERS OF 5/8" THICK TYPE "X" WALLBOARD, APPLIED EITHER HORIZONTALLY OR VERTICALLY. BASE LAYER ATTACHED TO STUDS WITH THE 1-7/8 IN. NAILS, SPACED 6 IN. O.C. OUTER LAYER ATTACHED TO STUDS OVER INNER LAYER WITH THE 2-3/8 IN. NAILS, SPACED 8 IN. O.C. VERTICAL JOINTS LOCATED OVER STUDS. ALL JOINTS IN FACE LAYERS STAGGERED WITH JOINTS IN BASE LAYERS. JOINTS OF EACH BASE LAYER OFFSET WITH JOINT OF BASE LAYER ON OPPOSITE SIDE.

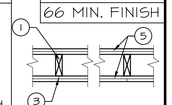

12 GA FILE NO. 5724 2 HOUR FIRE FLOOR CEILING SYSTEM

FLOOR OR ROOF CONSTRUCTION

2x10 WOOD JOISTS SPACED A MAXIMUM 16" O.C.
19/32" PLYWOOD STRUCTURAL PANELS WITH EXTERIOR GLUE APPLIED AT RIGHT ANGLES TO TOP OF JOIST WITH 8d NAILS.
15/32" PLYWOOD STRUCTURAL PANELS WITH EXTERIOR GLUE APPLIED WITH JOINTS STAGGERED WITH 8d NAILS.

CEILING CONSTRUCTION

BASE LAYER: 5/8" PROPRIETARY TYPE "X" GYPSUM WALLBOARD APPLIED AT RIGHT ANGLES TO JOIST WITH 8d NAILS @ 7" O.C.

RESILIENT CHANNELS - SPACED 24 in. O.C. PERPENDICULAR TO TRUSSES. CHANNELS SECURED TO EACH JOIST WITH ONE 8d NAIL IN EACH JOIST

FACE LAYER: 5/8" PROPRIETARY TYPE "X" GYPSUM WALLBOARD APPLIED AT RIGHT ANGLES TO RESILIENT CHANNELS WITH 1" TYPE S DRYWALL SCREW 12" O.C. DOUBLE CHANNEL APPLIED AND FACE LAYER END JOINTS.

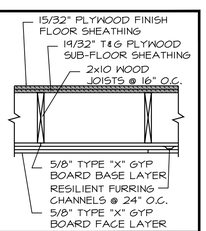

7 UL DESIGN NO. X528

1 HOUR FIRE

COLUMN MINIMUM SIZE	CONSTRUCTION
TS4 x 4 x 0.188 TS8 x 8 x 0.25	1. ANY $\frac{1}{2}$" OR $\frac{5}{8}$" GYPSUM WITH U.L. FIRE RESISTANCE MARKINGS, APPLIED VERTICALLY WITHOUT HORIZONTAL JOINTS ONE HOUR / ONE LAYER HELD IN PLACE WITH PAPER MASKING TAPE.

8 IBC 720.1.2 & 720.1(1) ITEM NUMBER 1-1.5 MIN. PROTECTION OF PRIMARY STRUCTURAL STEEL COLUMNS

Unit Masonry Protection

1 HOUR FIRE

1" MINIMUM THICKNESS FOR 8x8 CONCRETE BLOCKS
2"x8"x8" NOMINAL BLOCKS SHOWN
WALL TIES PER 720.1.2

9 ASTM E119-00a

CONTEGO INTUMESCENT FIRE RETARDANT

1 HOUR FIRE

COLUMN SIZES	AVG. COATING THICKNESS (MILS.)
W10 x 49	76
W12 x 106	57

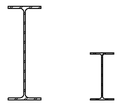

13 UL DESIGN NO. U366 SEPARATION WALL CONSTRUCTION

2 HOUR FIRE

SECTION A-A

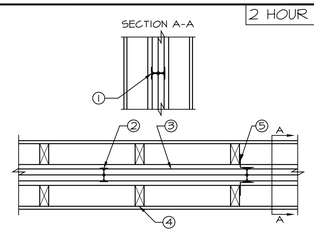

SEPARATION WALL: (Max Height - 44 ft)
1. FLOOR, INTERMEDIATE OR TOP WALL - 2" WIDE CHANNEL SHAPED WITH 1" LONG LEGS FORMED FROM No. 25 MSG GALV. STEEL, SECURED WITH SUITABLE FASTENERS SPACED 24" O.C.

2. STEEL STUDS - STEEL MEMBERS FORMED FROM No. 25 MSG GALV. STEEL HAVING "H"-SHAPED FLANGED SPACED 24" O.C.; OVERALL DEPTH 2" AND FLANGE WIDTH 1 3/8".

3. GYPSUM BOARD - TWO LAYERS OF 1" THICK GYPSUM WALLBOARD LINER PANELS, SUPPLIED IN NOM 24" WIDTHS. VERTICAL EDGES OF PANELS FRICTION FITTED INTO "H"-SHAPED STUDS.

PROTECTED WALL: (Bearing or Nonbearing Wall)
4. WOOD STUDS & GYPSUM BOARD - 2 x 4 STUD WALL AT 24" O.C. WITH A MIN. OF 3/4" SEPARATION BETWEEN WOOD FRAMING AND FIRE SEPARATION WALL.

5. MIN. 1/2" GYPSUM ON INTERIOR SIDE OF WALL.

6. ATTACHMENT CLIPS - ALUMINUM ANGLE, 0.063" THICK, 2" WIDE AND 2 1/4" LEGS. CLIPS SECURED WITH TYPE S SCREWS 3/8" LONG TO "H" STUDS AND WITH TYPE W SCREWS 1 1/4" LONG TO WOOD FRAMING THROUGH HOLES PROVIDED IN CLIP.

LaPlant Architecture, LLC
OFFICE:926 WILLARD DRIVE
GREEN BAY, WISCONSIN
MAILING: 1592 RUSTIC WAY
GREEN BAY, WISCONSIN 54313
Telephone: (920) 737-9769
EMAIL: laplantarchitecture@yahoo.com

© LaPlant Architecture LLC 2015

REVISION	DATE
X	XX

DATE 3/15/2016
PROJECT NO. 461482
SHEET T 1.2

SAFETY PLANS

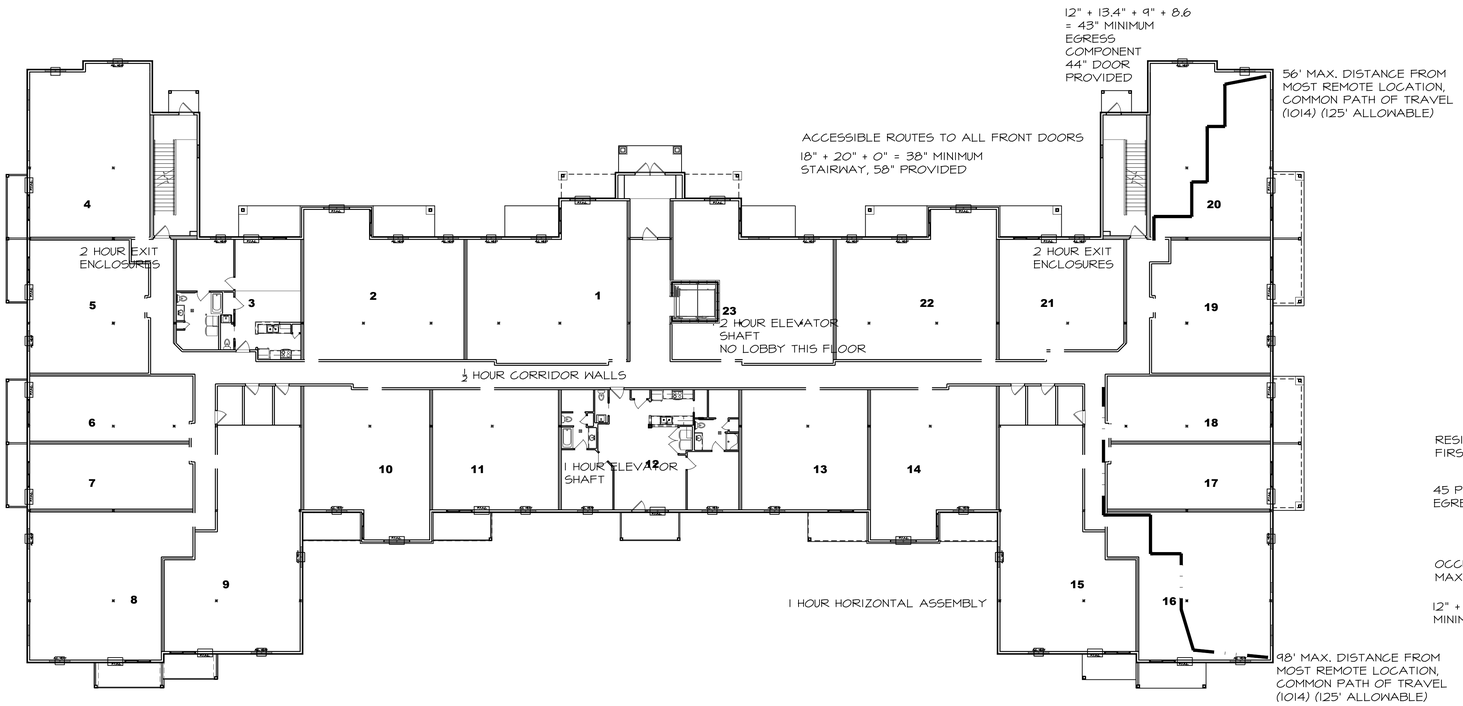

FIRST FLOOR PLAN

NOT TO SCALE:

RESIDENTIAL = ONE PERSON / 200 S.F. GROSS *
FIRST FLOOR 26,810 S.F. / 200 =134 PEOPLE / 3 EXITS = 45 PEOPLE

45 PEOPLE * .2 = 9" MINIMUM
EGRESS COMPONENT

45 PEOPLE * 0
NO PEOPLE GO TO STAIRWAY

OCCUPANT LOADS PER (1004.1.1)
MAX. CONVERGENCE PER EXIT

12" + 13.4" + 9" + 8.6 = 43"
MINIMUM EGRESS COMPONENT

18" + 20" = 38" MINIMUM
STAIRWAY

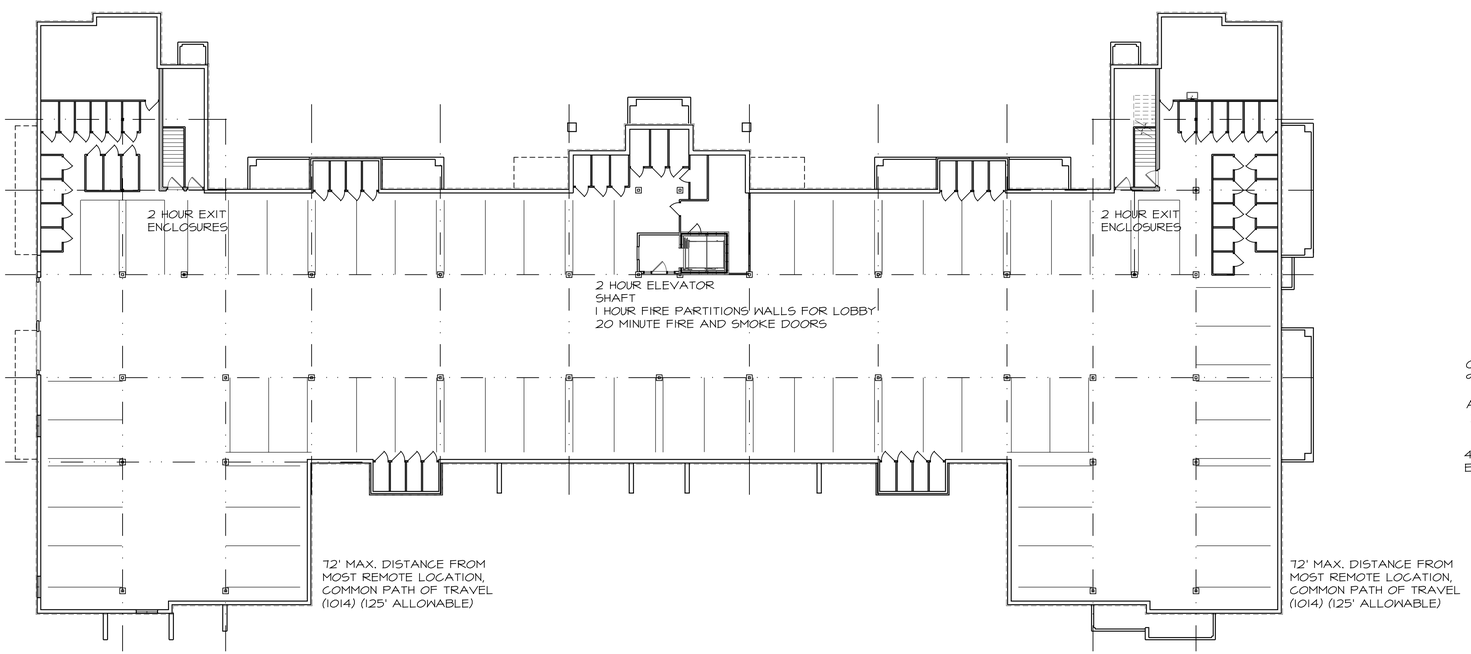

PARKING PLAN

NOT TO SCALE:

OCCUPANT LOADS PER (1004.1.1)
98 PEOPLE PARKING LEVEL

ACCESSORY = ONE PERSON / 300 S.F. GROSS *
25,804 S.F. / 300 =86 PEOPLE / 2 EXITS = 43 PEOPLE

43 PEOPLE * .2 = 8.6" MINIMUM
EGRESS COMPONENT

43 PEOPLE * .3 = 13" MINIMUM
STAIRWAY

LaPlant
Architecture, LLC
laplantarchitecture@yahoo.com
OFFICE:926 WILLARD DRIVE
GREEN BAY, WISCONSIN
MAILING: 1592 RUSTIC WAY
GREEN BAY, WISCONSIN 54313
Telephone: (920) 737-9769
EMAIL:

© LaPlant Architecture LLC 2015

REVISION	DATE
X	XX

DATE
3/15/2016

PROJECT NO.
461462

SHEET
T
2.1

SAFETY PLANS

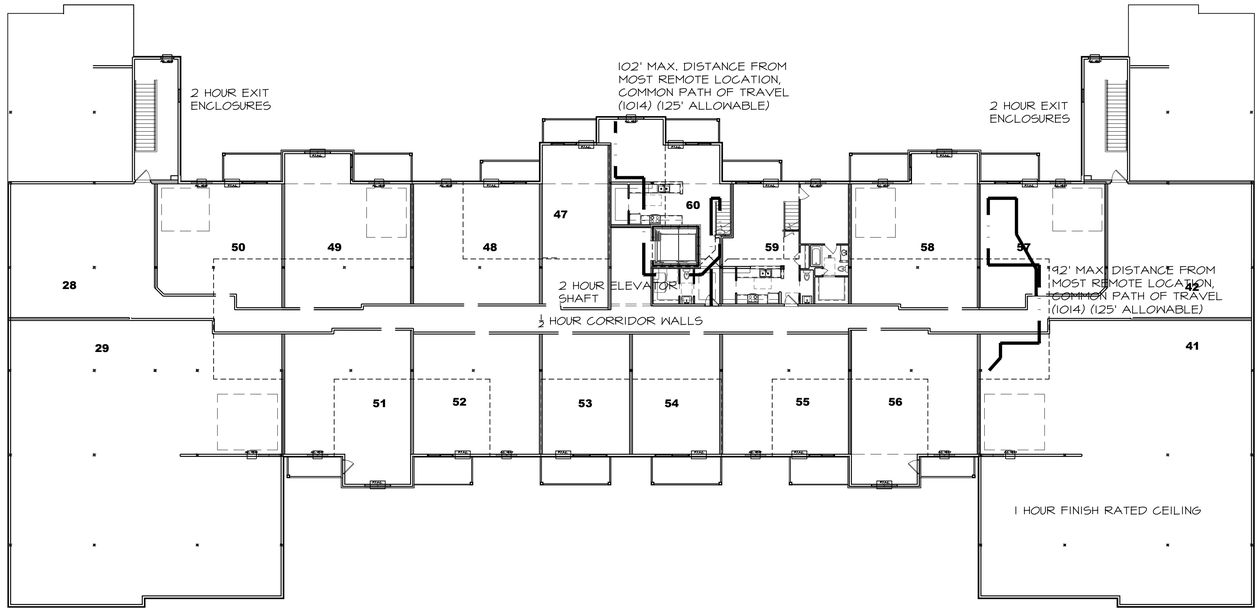

THIRD FLOOR PLAN

NOT TO SCALE:

OCCUPANT LOADS PER (1004.1.1)
120 PEOPLE TOTAL FROM BOTH THIRD AND LOFT FLOORS

RESIDENTIAL = ONE PERSON / 200 S.F. GROSS *
23,933 S.F. / 200 =120 PEOPLE / 2 EXITS = 60 PEOPLE

60 PEOPLE * .2 = 12" MINIMUM EGRESS COMPONENT

60 PEOPLE * .3 = 18" MINIMUM STAIRWAY

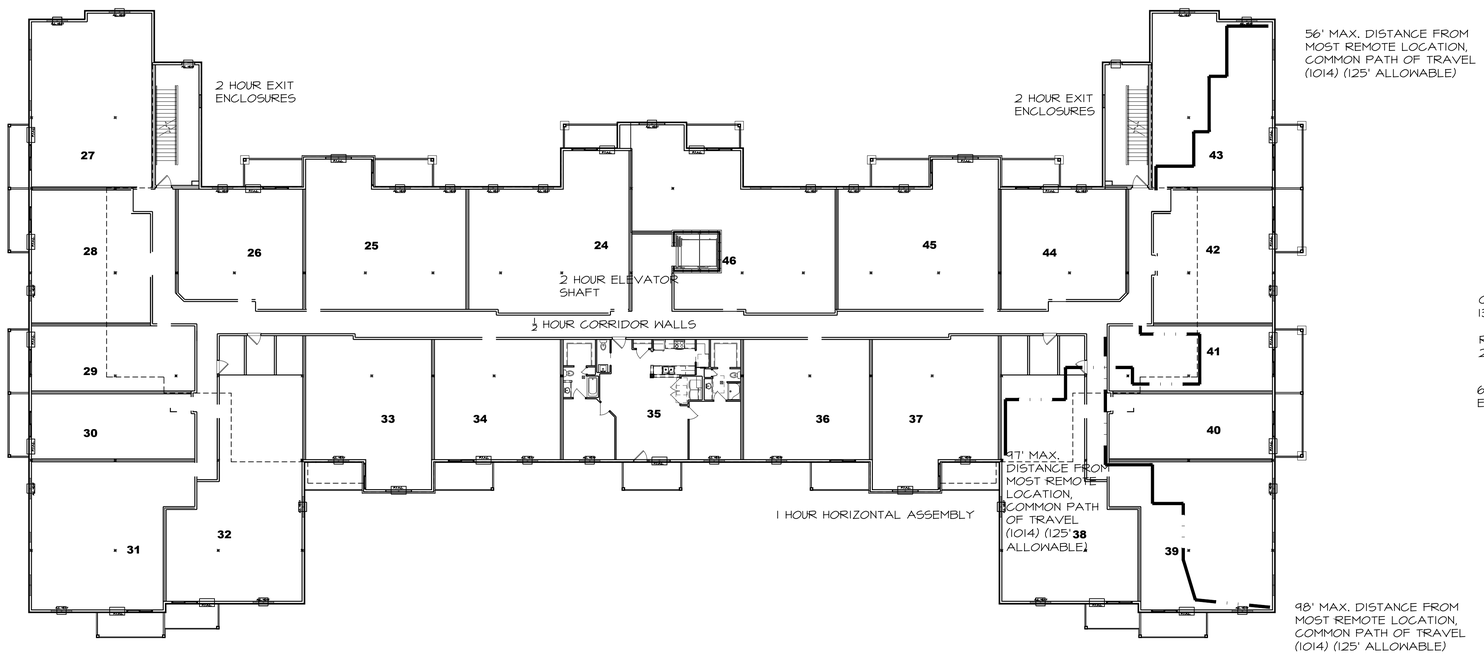

SECOND FLOOR PLAN

NOT TO SCALE:

OCCUPANT LOADS PER (1004.1.1)
134 PEOPLE TOTAL FROM SECOND FLOOR

RESIDENTIAL = ONE PERSON / 200 S.F. GROSS *
26,810 S.F. / 200 =134 PEOPLE / 2 EXITS = 67 PEOPLE

67 PEOPLE * .2 = 13.5" MINIMUM EGRESS COMPONENT

67 PEOPLE * .3 = 20" MINIMUM STAIRWAY

LaPlant Architecture, LLC
OFFICE:926 WILLARD DRIVE
GREEN BAY, WISCONSIN
MAILING: 1592 RUSTIC WAY
GREEN BAY, WISCONSIN 54313
Telephone: (920) 737-9769
EMAIL: laplantarchitecture@yahoo.com

© LaPlant Architecture LLC 2015

REVISION	DATE
X	XX

DATE 3/15/2016

PROJECT NO. 461462

SHEET T 2.2

Proposed New 60 Unit Leased Residences
with Lower Level Parking
Presented by;

LEXINGTON HOMES
Skyline Towers

DETAIL OF
FRONT ELEVATION
SCALE: 3/16" = 1'-0"

FRONT ELEVATION
SCALE: 3/32" = 1'-0"

LaPlant
Architecture, LLC

OFFICE:926 WILLARD DRIVE
GREEN BAY, WISCONSIN
MAILING: 1592 RUSTIC WAY
GREEN BAY, WISCONSIN 54313
Telephone: (920) 737-9769
EMAIL: laplantarchitecture@yahoo.com

© LaPlant Architecture LLC 2015

REVISION	DATE
X	XX

DATE
3/17/2016

PROJECT NO.
461462

SHEET
A
1.1

BACK ELEVATION

SCALE: 3/32" = 1'-0"

97th COURT

GENERAL NOTE:
EXTERIOR MATERIAL ON FACE OF BUMP OUT BELONGS ON RETURN SURFACES NOT SEEN IN ELEVATION

DETAIL OF BACK ELEVATION

SCALE: 3/16" = 1'-0"

LaPlant Architecture, LLC
laplantarchitecture@yahoo.com
OFFICE:926 WILLARD DRIVE
GREEN BAY, WISCONSIN
MAILING: 1592 RUSTIC WAY
GREEN BAY, WISCONSIN 54313
Telephone: (920) 737-9769
EMAIL:
© LaPlant Architecture LLC 2015

REVISION	DATE
X	XX

DATE
3/17/2016

PROJECT NO.
461462

SHEET
A
1.2

96th AVENUE

GARAGE ENTRANCE ELEVATION

SCALE: 3/16" = 1'-0"

94th AVENUE

STREET ELEVATION

SCALE: 3/16" = 1'-0"

LaPlant Architecture, LLC

OFFICE:926 WILLARD DRIVE
GREEN BAY, WISCONSIN
MAILING: 1592 RUSTIC WAY
GREEN BAY, WISCONSIN 54313
Telephone: (920) 737-9769
EMAIL: laplantarchitecture@yahoo.com

© LaPlant Architecture LLC 2015

REVISION	DATE
X	XX

DATE 3/17/2016

PROJECT NO. 461462

SHEET A 1.3

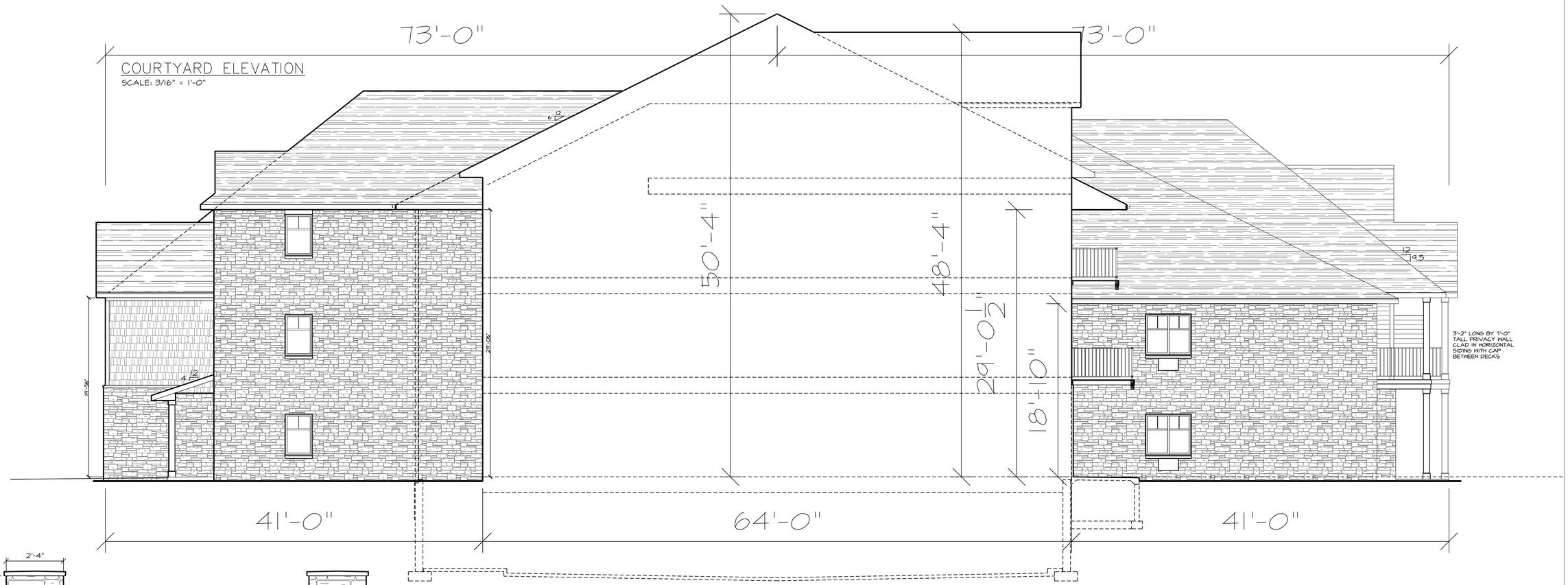

COURTYARD ELEVATION

SCALE: 3/16" = 1'-0"

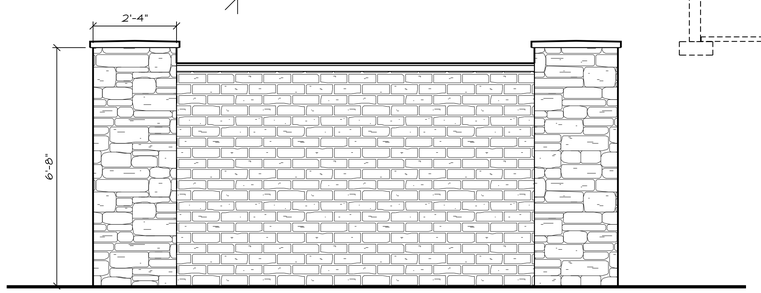

SIGN ELEVATION

SCALE: 1/2" = 1'-0"

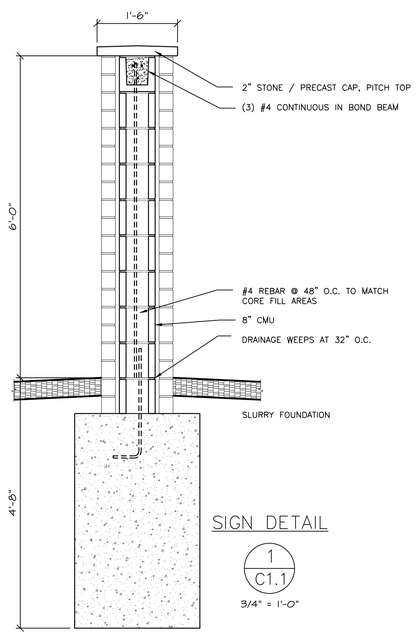

SIGN DETAIL

1 / C1.1

3/4" = 1'-0"

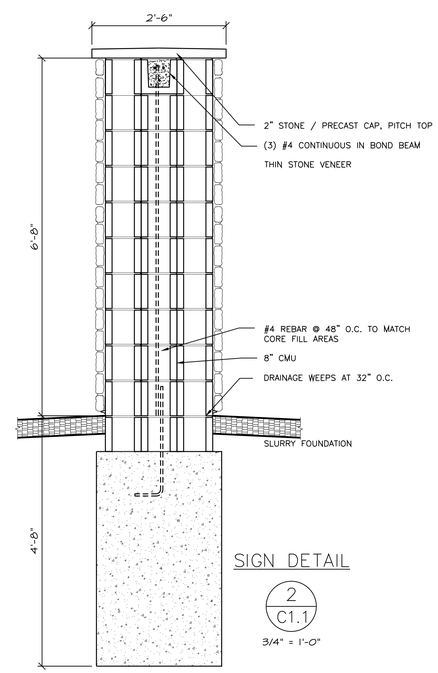

SIGN DETAIL

2 / C1.1

3/4" = 1'-0"

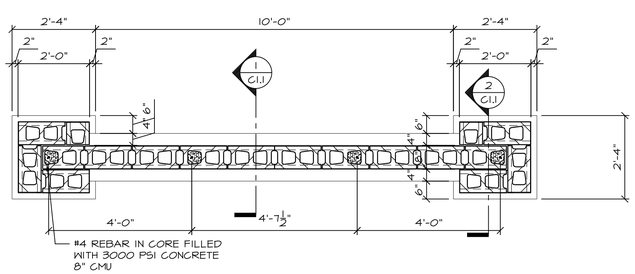

SIGN PLAN

SCALE: 1/2" = 1'-0"

LaPlant Architecture, LLC

OFFICE:926 WILLARD DRIVE
GREEN BAY, WISCONSIN
MAILING: 1592 RUSTIC WAY
GREEN BAY, WISCONSIN 54313
Telephone: (920) 737-9769
EMAIL: laplantarchitecture@yahoo.com

© LaPlant Architecture LLC 2015

REVISION	DATE
X	XX

DATE 3/17/2016

PROJECT NO. 461462

SHEET A 1.4

DWELLING UNIT PLAN NOTES

1. 1 HOUR RATED HORIZONTAL ASSEMBLY WITH GYPCRETE TOPPING, BIB INSULATION AND FURRING CHANNELS.
2. 1 HOUR RATED HORIZONTAL ASSEMBLY WITH GYPCRETE TOPPING, BIB INSULATION AND RESILIENT CHANNELS.
3. 1 HOUR FINISH RATED CEILING OR ENCLOSURE CAP, SEAMS DO NOT REQUIRE TAPE FOR THERE WOULD BE NO GAPS WITH TWO LAYERS.
4. 1 HOUR RATED WALL ASSEMBLY.
5. 1 HOUR RATED WALL ASSEMBLY.
6. 1 HOUR RATED EXTERIOR WALL RATED FROM THE INSIDE ONLY.
7. 1 HOUR RATED COLUMN COVERS.
8. 1 HOUR PROTECTION FOR PRIMARY LOAD BEARING STEEL BEAMS AND POSTS
9. NOT USED
10. 1'-8"x10" ENCLOSED STANDPIPE, 12"x24" CABINET FRONT AT VALVES
11. DOOR KEY LOCKED, INTERCOM CALL DEVICE
12. STACK OF (4) 12" DEEP SHELVES, START AT 28" A.F.F. THEN 14"O.C.
20. STACK OF 3 SHELVES, START AT 42" A.F.F. THEN 14" O.C. TO ALLOW ACCESSIBLE KNEE SPACE
13. 2X6 INTERIOR WALL
14. SINGLE SHELF WITH POLE ABOVE LAUNDRY, 15"x30" CABINET.
15. FLOOR COVERING TRANSITION LINE.
16. 2x4x3'-6" HEIGHT FROM TOP OF OSB DECK TO TOP PLATE. BRACED GUARD WALL WITH WOOD CAP AND CASING. FINISH BOTH SIDES OF CAP.
17. 2x6x3'-6" HEIGHT FROM TOP OF OSB DECK TO TOP PLATE. BRACED GUARD WALL WITH WOOD CAP AND CASING. FINISH BOTH SIDES OF CAP.
18. 2x6x3'-10" HEIGHT FROM TOP OF OSB DECK TO SINGLE TOP PLATE. BRACED WALL WITH LAMINATE TOP.
19. NOT USED
20. 3'-0" DEEP COUNTER TOP - SNACK BAR, OPEN CABINET BACK.
20. 3'-6" DEEP COUNTER TOP - SNACK BAR, OPEN CABINET BACK.
21. SLOPED CEILING UNDER STAIR. DOOR MAY HAVE STRINGER BEHIND.
22. ACOUSTIC CEILING DROPPED TO 8' A.F.F.
23. 6" WIDE GYPSUM SOFFIT DROPPED TO 8' A.F.F.
24. ATTIC SCUTTLE PANEL IN CEILING, SEE 5/A4.2
25. 9' FLAT CEILING, FLOOR ABOVE
26. TREY DROPPED 8" AND FRAMED INTO ROOM 12", 9' CEILING MINIMUM, CEILING FOR ALL BEDROOMS WITH 11' MINIMUM WIDTH.
27. TREY BUILT UP ABOVE EXTERIOR WALL HEIGHT, 12" OUT AND 8" UP.
28. FURRED WALL
29. SOUND INSULATED WALL
30. 2x2 WALL
31. STEEL COLUMN AND BEAM ABOVE, INSULATE ALL SPACE BETWEEN STEEL AND EXTERIOR SHEATHING.
32. EXTERIOR WALL - EITHER IN ATTIC OR ABOVE THE ROOF LINE, EXTERIOR SURFACE SHEATHED WITH OSB

DWELLING ELECTRICAL / MECHANICAL NOTES

A. ELECTRIC SERVICE PANEL LOCATION AND 30" MIN. x 36" CLEAR FLOOR SPACE.
B. PEDESTAL SINK WITH KNEE SPACE, TOILET TO HAVE FUTURE GRAB BAR BLOCKING.
C. MICROWAVE HOOD COMBINATION ABOVE RANGE. (IN TYPE "A" UNIT - ACCOMMODATE COUNTERTOP MICROWAVE)
D. SURFACE MOUNT ELECTRIC BASEBOARD HEAT.
E. LAUNDRY PLUMBING HOOKUP AND EXHAUST WALL, AVOID RATED WALL. 2x6 WALL, FIELD VERIFY LOCATION FOR POTENTIAL TRUSS INTERFERENCE.
F. PEDESTAL SINK DOES NOT REQUIRE KNEE SPACE, TOILET DOES NOT REQUIRE FUTURE GRAB BAR BLOCKING.

TYPICAL DWELLING MATERIAL NOTES

1. ALL WINDOWS AND DOORS IN KITCHEN, LIVING AND DINING ROOMS (COMMON AREAS) HAVE JAMBS AND CASED OPENINGS. ALL WINDOWS AND DOORS IN PRIVATE ROOMS LIKE BEDROOMS HAVE GYPSUM JAMB RETURNS. WINDOWS ARE TO PROVIDE EMERGENCY ESCAPE AND RESCUE OPENINGS AT ALL BEDROOMS WITH CLEAR OPENING MAXIMUM 44" A.F.F. (IBC 1026)
2. ALL 3/0 UNIT ENTRY DOORS HAVE LOW PROFILE THRESHOLDS, 20 MIN. RATING
3. ALL FLOORS SERVED BY THE ELEVATOR HAVE INTERIOR UNIT DOORS THAT ARE $\frac{20}{20}$ UNLESS OTHERWISE NOTED.
4. ALL LOFT FLOOR DOORS ARE $\frac{20}{20}$ UNLESS OTHERWISE NOTED.
5. ALL BATHROOM VANITY COUNTER TOPS ARE STONE WITH MOLDED SINK. ALL VANITIES ARE 42" WIDE U.O.N. SEE SHEET A/4.1 FOR TYPICAL TOILET PLAN DIMENSIONS AND BLOCKING.
6. ALL LINEN CLOSETS 20" DEEP MAX.
7. ALL TUBS ARE 60x32", ALL SHOWERS ARE 48x36".
8. PERIMETER OF BUILDING DIMENSIONS ARE TO THE SHEATHING, NOTE EXTERIOR WALL IS LABELED AS 6". INTERIOR DIMENSIONS ARE STUD TO STUD.

TYPICAL FIRE RATED STRUCTURES NOTES

1. ALL EXTERIOR WALLS ARE FIRE RATED FROM THE INSIDE, STUDS 2x6x16" O.C. UNLESS OTHERWISE NOTED.
2. ALL INTERIOR PARTITIONS ARE NON-BEARING AND STUDS ARE 2x @ 24" O.C. UNIT SEPARATIONS ARE 1 HOUR RATED AND CORRIDORS ARE $\frac{1}{2}$ HOUR RATED. U.O.N.
3. NO DRAFTSTOPPING REQUIRED IN FLOOR OR ATTIC SPACES.
4. FIRST FLOOR (HORIZONTAL ASSEMBLY) 1 HOUR RATED, STEEL IS INDIVIDUALLY ENCAPSULATED. RESILIENT CHANNEL FOR PARKING AREA CEILING U.O.N.
5. SECOND FLOOR (HORIZONTAL ASSEMBLY) 1 HOUR RATED, STEEL IS INDIVIDUALLY SPRAY FIRE PROTECTED. IB-1 CHANNEL FOR FIRST FLOOR CEILING U.O.N.
6. THIRD FLOOR (HORIZONTAL ASSEMBLY) 1 HOUR RATED, STEEL IS INDIVIDUALLY SPRAY FIRE PROTECTED. IB-1 CHANNEL FOR FIRST FLOOR CEILING U.O.N.
7. LOFT FLOOR (HORIZONTAL ASSEMBLY) 1 HOUR RATED, STEEL IS SPRAY FIRE PROTECTED. RESILIENT CHANNEL FOR SECOND FLOOR CEILING U.O.N.
8. STAIR AND ELEVATOR SHAFTS ARE TWO HOUR RATED GYPSUM SHAFT WALL SYSTEM ENDING AT TWO HOUR CAP.

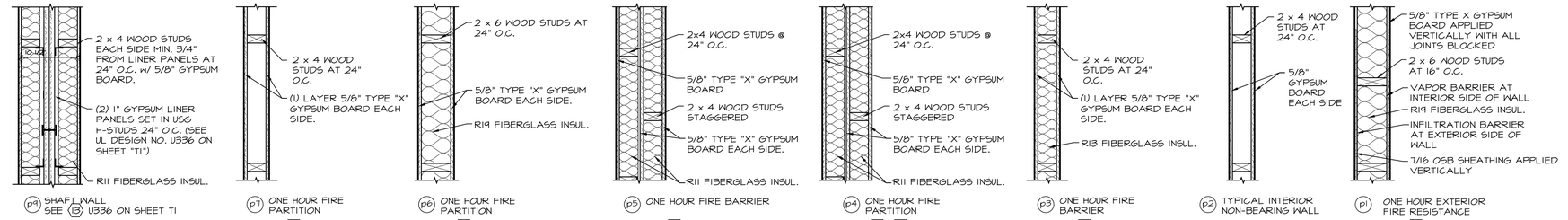

PARTITION TYPES

SCALE: 1 1/2" = 1'-0"

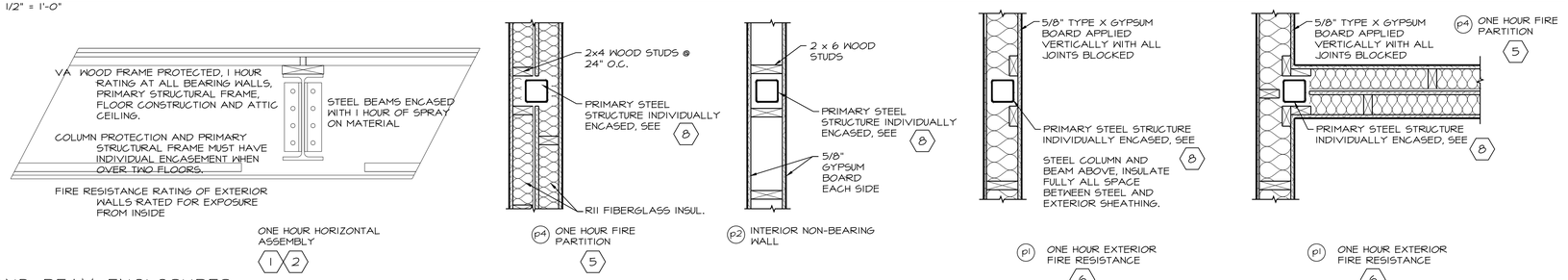

POST AND BEAM ENCLOSURES

SCALE: 1 1/2" = 1'-0"

LOWER LEVEL OPENINGS:
- ARE NOT IN THE THERMAL ENVELOPE
- (3) 5/0x2/0 FIXED WINDOWS TO MATCH BUILDING ABOVE
- TWO 9'-0"x7'-0" GARAGE DOORS
- TWO AIR OPENINGS, CONFIRM REQUIRED GRILLS / GRATES AND SIZES

FIRST FLOOR OPENING SCHEDULE

WINDOW STYLE	BUILDING FRONT	GARAGE SIDE	STREET SIDE	POND ELEVATION	COURTYARD ELEVATIONS	WINDOW S.F.	TOTAL THIS FLOOR	TOTAL S.F. THIS FLOOR
5/0x4/6	14	2	2	10	2	22.5	30	765
3/0x4/6	0	0	0	0	2	13.5	2	27
5/0x2/0	0	2	2	0	0	10	4	40
2/6x2/0	0	2	2	0	0	5	4	20
6/0x4/6	2	0	0	2	0	27	4	108
6/0x4/0	2	0	0	0	0	24	2	x
4/0x4/6	0	0	0	0	0	18	0	72
5/0x4/0	0	0	0	1	0	20	1	60
TRANSOMS 3/0x1/8	0	0	0	1	0	4.5	1	13.5
5/0x1/8	0	0	0	1	0	7.5	1	22.5
6/0x1/6	2	4	4	6	0	9	16	180
								1,308
DOOR STYLE	BUILDING FRONT	GARAGE SIDE	STREET SIDE	POND ELEVATION	COURTYARD ELEVATIONS	DOOR S.F.	TOTAL THIS FLOOR	TOTAL S.F. THIS FLOOR
(2) 3/4x7/0	1	0	0	0	0	46.2	1	46.2
3/8x7/0	2	0	0	0	0	23.1	2	46.2
3/0x6/8	0	0	0	1	0	20	1	60
6/0x6/8 PATIO DOOR	6	4	4	8	0	40	22	960
NOTE; THERE ARE DOORS IN THE LOBBY AND EXIT ENCLOSURE NOT COUNTED HERE FOR THEY ARE NOT EXTERIOR OPENINGS.								1,112

SECOND FLOOR OPENING SCHEDULE

WINDOW STYLE	BUILDING FRONT	GARAGE SIDE	STREET SIDE	POND ELEVATION	COURTYARD ELEVATIONS	WINDOW S.F.	TOTAL THIS FLOOR	TOTAL S.F. THIS FLOOR
5/0x4/6	14	2	2	10	2	22.5	30	630
3/0x4/6	2	0	0	0	2	13.5	4	54
5/0x2/0	0	2	2	0	0	10	4	40
2/6x2/0	0	2	2	0	0	5	4	20
6/0x4/0	1	0	0	0	0	24	1	96
6/0x4/6	2	0	0	2	0	27	4	27
4/0x4/6	0	0	0	0	0	18	0	0
5/0x4/0	0	0	0	1	0	20	1	40
TRANSOMS 3/0x1/6	0	0	0	1	0	4.5	1	9
5/0x1/8	0	2	2	1	0	7.5	5	60
6/0x1/6	4	4	4	6	0	9	18	198
8/0x1/6	0	0	0	0	0	12	0	24
								1,198
DOOR STYLE	BUILDING FRONT	GARAGE SIDE	STREET SIDE	POND ELEVATION	COURTYARD ELEVATIONS	DOOR S.F.	TOTAL THIS FLOOR	TOTAL S.F. THIS FLOOR
(2) 3/4x7/0	0	0	0	0	0	46.2	0	0
3/4x7/0	0	0	0	0	0	23.1	0	0
3/0x6/8	0	0	0	1	0	20	1	40
6/0x6/8 PATIO DOOR	6	4	4	8	0	40	22	1040
8/0x6/8 PATIO DOOR	0	0	0	0	0	53.4	0	107
								1,187

THIRD FLOOR OPENING SCHEDULE

WINDOW STYLE	BUILDING FRONT	GARAGE SIDE	STREET SIDE	POND ELEVATION	COURTYARD ELEVATIONS	WINDOW S.F.	TOTAL THIS FLOOR	TOTAL S.F. THIS FLOOR
5/0x4/6	6	0	0	4	0	22.5	10	630
3/0x4/6	2	0	0	0	2	13.5	4	54
5/0x2/0	0	0	0	0	0	10	10	40
2/6x2/0	0	0	0	2	0	5	7	20
6/0x4/0	2	0	0	2	0	24	4	96
6/0x4/6	1	0	0	0	0	27	1	27
4/0x4/6	0	0	0	0	0	18	0	0
5/0x4/0	0	0	0	2	0	20	2	40
TRANSOMS 3/0x1/6	0	0	0	0	0	4.5	0	9
5/0x1/8	2	0	0	2	0	7.5	4	60
6/0x1/6	6	0	0	2	0	9	8	198
8/0x1/6	0	0	0	2	0	12	2	24
								1,198
DOOR STYLE	BUILDING FRONT	GARAGE SIDE	STREET SIDE	POND ELEVATION	COURTYARD ELEVATIONS	DOOR S.F.	TOTAL THIS FLOOR	TOTAL S.F. THIS FLOOR
(2) 3/4x7/0	0	0	0	0	0	46.2	0	0
3/4x7/0	0	0	0	0	0	23.1	0	0
3/0x6/8	0	0	0	2	0	20	2	40
6/0x6/8 PATIO DOOR	8	0	0	2	0	40	10	1040
8/0x6/8 PATIO DOOR	0	0	0	2	0	53.4	2	107
								1,187

LOFT FLOOR OPENING SCHEDULE

WINDOW STYLE	BUILDING FRONT	GARAGE SIDE	STREET SIDE	POND ELEVATION	COURTYARD ELEVATIONS	WINDOW S.F.	TOTAL THIS FLOOR	TOTAL S.F. THIS FLOOR
5/0x4/6	2	0	0	4	0	22.5	6	225
3/0x4/6	0	0	0	0	0	13.5	0	0
5/0x2/0	0	0	0	0	0	10	0	0
2/6x2/0	0	0	0	0	0	5	0	0
6/0x4/0	1	0	0	0	0	24	1	24
6/0x4/6	0	0	0	0	0	27	0	0
4/0x4/6	0	0	0	0	0	18	0	0
5/0x4/0	0	0	0	0	0	20	0	0
TRANSOMS 3/0x1/8	0	0	0	0	0	4.5	0	0
5/0x1/8	0	0	0	0	0	7.5	0	0
6/0x1/8	1	0	0	0	0	10	1	10
								259

LaPlant Architecture, LLC
OFFICE:926 WILLARD DRIVE
GREEN BAY, WISCONSIN
MAILING: 1592 RUSTIC WAY
GREEN BAY, WISCONSIN 54313
Telephone: (920) 737-9769
EMAIL: laplantarchitecture@yahoo.com

© LaPlant Architecture LLC 2015

REVISION	DATE
X	XX

DATE 3/17/2016
PROJECT NO. 461462
SHEET A2

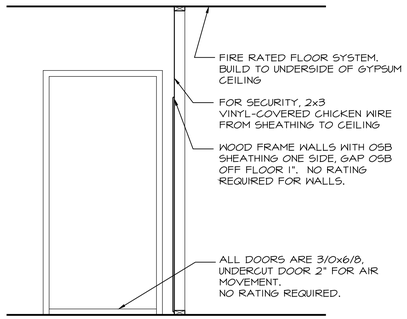

1 A2.0 STORAGE UNITS
SCALE: 1/2" = 1'-0"

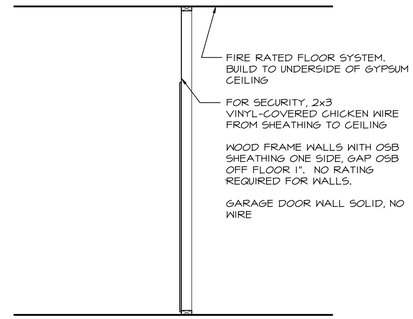

2 A2.0 GARAGE WALLS
SCALE: 1/2" = 1'-0"

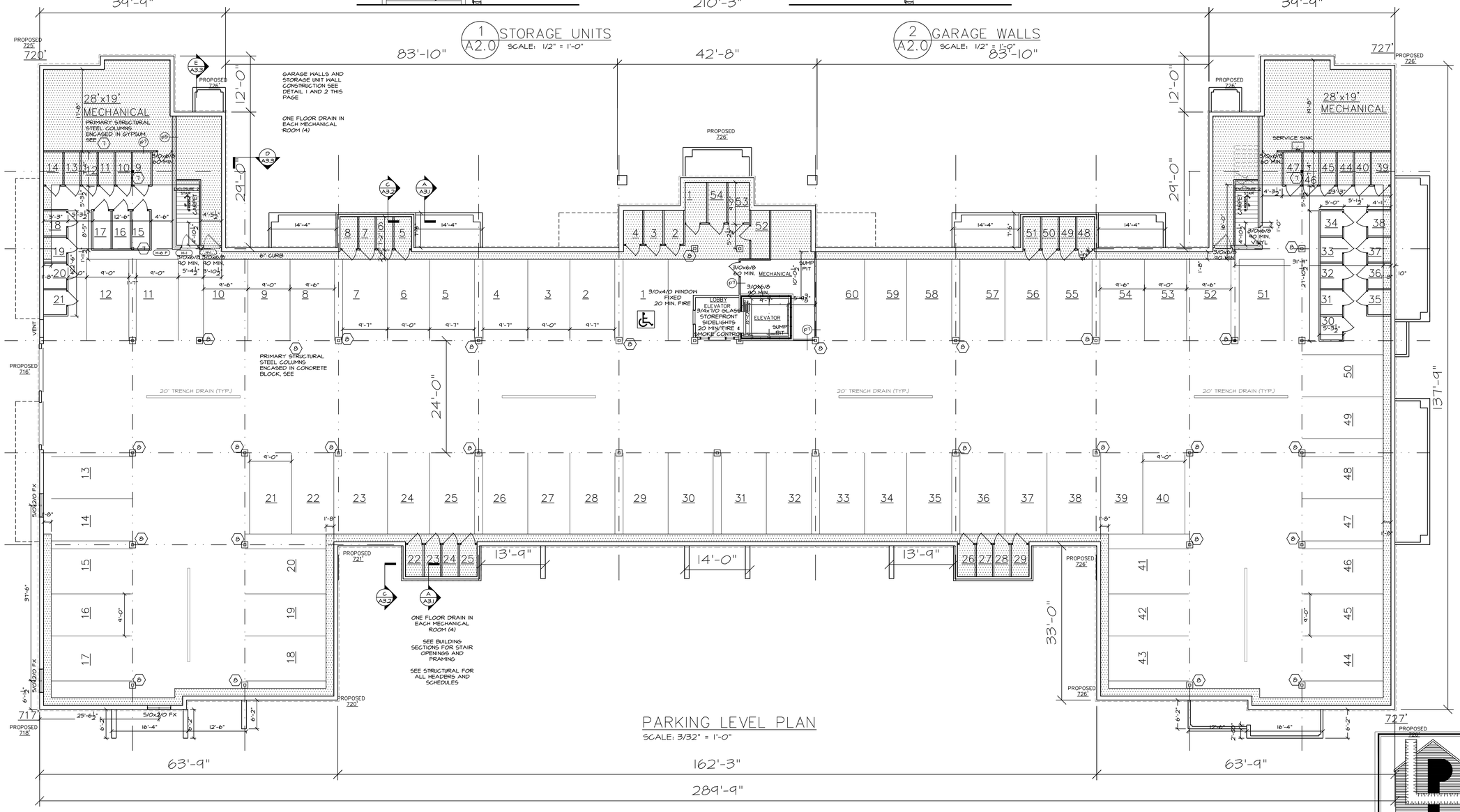

PARKING LEVEL PLAN
SCALE: 3/32" = 1'-0"

LaPlant Architecture, LLC
OFFICE:926 WILLARD DRIVE
GREEN BAY, WISCONSIN
MAILING: 1592 RUSTIC WAY
GREEN BAY, WISCONSIN 54313
Telephone: (920) 737-9769
EMAIL: laplantarchitecture@yahoo.com
© LaPlant Architecture LLC 2015

REVISION	DATE
X	XX

DATE 3/15/2016
PROJECT NO. 461482
SHEET A 2.0.1

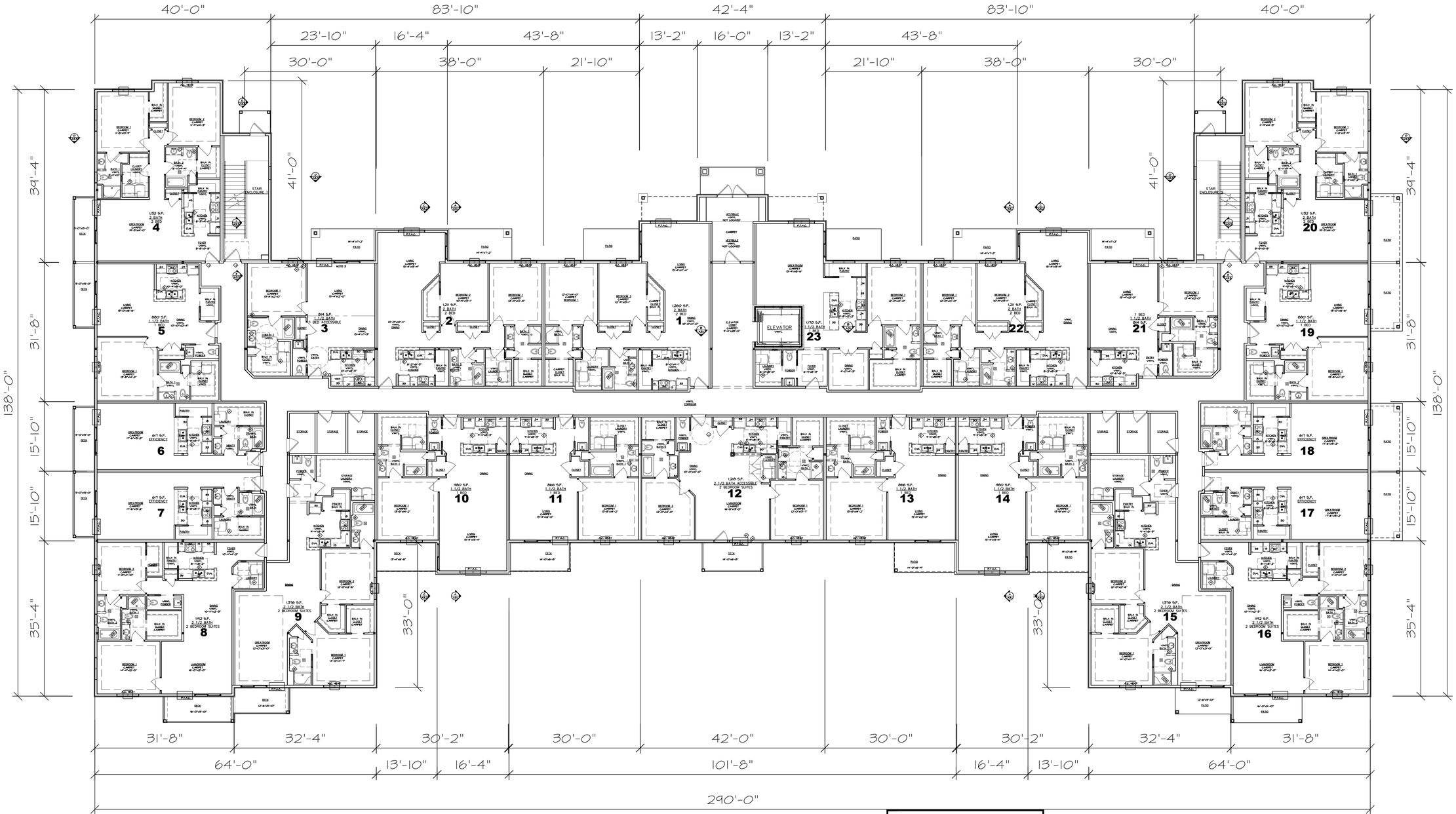

FIRST FLOOR PLAN

SCALE: 3/32" = 1'-0"

UNIT COUNT	
UNIT STYLE	NUMBER OF UNITS PER FLOOR
LUXURY 2 BEDROOM 2 ½ BATH	2
2 BEDROOM 2 ½ BATH	3
2 BEDROOM 2 BATH	5
LUXURY 1 BEDROOM 1 1/2 BATH	1
1 BEDROOM 1 1/2 BATH	8
EFFICIENCY 1 BATH	4

LaPlant Architecture, LLC
OFFICE:926 WILLARD DRIVE
GREEN BAY, WISCONSIN
MAILING: 1592 RUSTIC WAY
GREEN BAY, WISCONSIN 54313
Telephone: (920) 737-9769
EMAIL: laplantarchitecture@yahoo.com
© LaPlant Architecture LLC 2015

REVISION	DATE
X	XX

DATE 3/15/2016

PROJECT NO. 461462

SHEET A 2.1.1

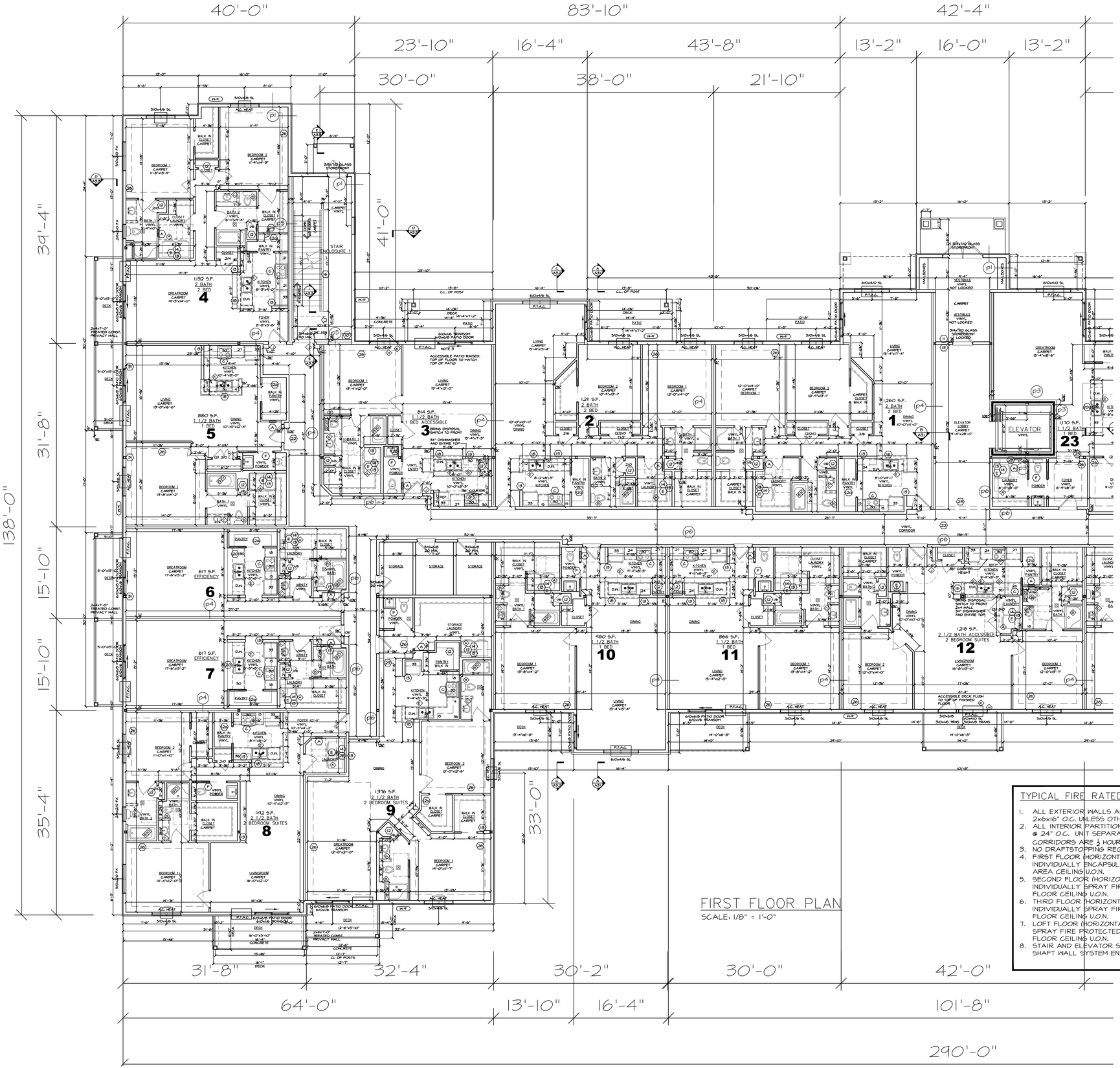

FIRST FLOOR PLAN

SCALE: 1/8" = 1'-0"

DWELLING UNIT PLAN NOTES

1. 1 HOUR RATED HORIZONTAL ASSEMBLY WITH GYPCRETE TOPPING, BIB INSULATION AND FURRING CHANNELS.
2. 1 HOUR RATED HORIZONTAL ASSEMBLY WITH GYPCRETE TOPPING, BIB INSULATION AND RESILIENT CHANNELS.
3. 1 HOUR FINISH RATED CEILING OR ENCLOSURE CAP, SEAMS DO NOT REQUIRE TAPE FOR THERE WOULD BE NO GAPS WITH TWO LAYERS.
4. 1 HOUR RATED WALL ASSEMBLY.
5. 1 HOUR RATED WALL ASSEMBLY.
6. 1 HOUR RATED EXTERIOR WALL RATED FROM THE INSIDE ONLY.
7. 1 HOUR RATED COLUMN COVERS.
8. 1 HOUR PROTECTION FOR PRIMARY LOAD BEARING STEEL BEAMS AND POSTS
9. NOT USED
10. 1'-8"x10" ENCLOSED STANDPIPE, 12"x24" CABINET FRONT AT VALVES
11. DOOR KEY LOCKED, INTERCOM CALL DEVICE
12. STACK OF (4) 12" DEEP SHELVES, START AT 28" A.F.F. THEN 14"O.C.
20. STACK OF 3 SHELVES, START AT 42" A.F.F. THEN 14" O.C. TO ALLOW ACCESSIBLE KNEE SPACE
13. 2X6 INTERIOR WALL
14. SINGLE SHELF WITH POLE ABOVE LAUNDRY, 15"x30" CABINET.
15. FLOOR COVERING TRANSITION LINE.
16. 2x4x3'-6" HEIGHT FROM TOP OF OSB DECK TO TOP PLATE. BRACED GUARD WALL WITH WOOD CAP AND CASING. FINISH BOTH SIDES OF CAP.
17. 2x6x3'-6" HEIGHT FROM TOP OF OSB DECK TO TOP PLATE. BRACED GUARD WALL WITH WOOD CAP AND CASING. FINISH BOTH SIDES OF CAP.
18. 2x6x3'-10" HEIGHT FROM TOP OF OSB DECK TO SINGLE TOP PLATE. BRACED WALL WITH LAMINATE TOP.
19. NOT USED
20. 3'-0" DEEP COUNTER TOP - SNACK BAR, OPEN CABINET BACK.
20a. 3'-6" DEEP COUNTER TOP - SNACK BAR, OPEN CABINET BACK.
21. SLOPED CEILING UNDER STAIR. DOOR MAY HAVE STRINGER BEHIND.
22. ACOUSTIC CEILING DROPPED TO 8' A.F.F.
23. 6" WIDE GYPSUM SOFFIT DROPPED TO 8' A.F.F.
24. ATTIC SCUTTLE PANEL IN CEILING, SEE 5/A4.2
25. 9' FLAT CEILING, FLOOR ABOVE
26. TREY DROPPED 8" AND FRAMED INTO ROOM 12", 9' CEILING MINIMUM, CEILING FOR ALL BEDROOMS WITH 11' MINIMUM WIDTH.
27. TREY BUILT UP ABOVE EXTERIOR WALL HEIGHT, 12" OUT AND 8" UP.
28. FURRED WALL
29. SOUND INSULATED WALL
30. 2x2 WALL
31. STEEL COLUMN AND BEAM ABOVE, INSULATE ALL SPACE BETWEEN STEEL AND EXTERIOR SHEATHING.
32. EXTERIOR WALL - EITHER IN ATTIC OR ABOVE THE ROOF LINE, EXTERIOR SURFACE SHEATHED WITH OSB

DWELLING ELECTRICAL / MECHANICAL NOTES

- A. ELECTRIC SERVICE PANEL LOCATION AND 30" MIN. x 36" CLEAR FLOOR SPACE.
- B. PEDESTAL SINK WITH KNEE SPACE, TOILET TO HAVE FUTURE GRAB BAR BLOCKING.
- C. MICROWAVE HOOD COMBINATION ABOVE RANGE. (IN TYPE "A" UNIT - ACCOMMODATE COUNTERTOP MICROWAVE)
- D. SURFACE MOUNT ELECTRIC BASEBOARD HEAT.
- E. LAUNDRY PLUMBING HOOKUP AND EXHAUST WALL, AVOID RATED WALL. 2x6 WALL, FIELD VERIFY LOCATION FOR POTENTIAL TRUSS INTERFERENCE.
- F. PEDESTAL SINK DOES NOT REQUIRE KNEE SPACE, TOILET DOES NOT REQUIRE FUTURE GRAB BAR BLOCKING.

TYPICAL DWELLING MATERIAL NOTES

1. ALL WINDOWS AND DOORS IN KITCHEN, LIVING AND DINING ROOMS (COMMON AREAS) HAVE JAMBS AND CASED OPENINGS. ALL WINDOWS AND DOORS IN PRIVATE ROOMS LIKE BEDROOMS HAVE GYPSUM JAMB RETURNS. WINDOWS ARE TO PROVIDE EMERGENCY ESCAPE AND RESCUE OPENINGS AT ALL BEDROOMS WITH CLEAR OPENING MAXIMUM 44" A.F.F. (IBC 1026)
2. ALL 3/0 UNIT ENTRY DOORS HAVE LOW PROFILE THRESHOLDS, 20 MIN. RATING
3. ALL FLOORS SERVED BY THE ELEVATOR HAVE INTERIOR UNIT DOORS THAT ARE 3/8 UNLESS OTHERWISE NOTED.
4. ALL LOFT FLOOR DOORS ARE 3/8 UNLESS OTHERWISE NOTED.
5. ALL BATHROOM VANITY COUNTER TOPS ARE STONE WITH MOLDED SINK. ALL VANITIES ARE 42" WIDE U.O.N. SEE SHEET A/4.1 FOR TYPICAL TOILET PLAN DIMENSIONS AND BLOCKING.
6. ALL LINEN CLOSETS 20" DEEP MAX.
7. ALL TUBS ARE 60x32", ALL SHOWERS ARE 48x36".
8. PERIMETER OF BUILDING DIMENSIONS ARE TO THE SHEATHING, NOTE EXTERIOR WALL IS LABELED AS 6". INTERIOR DIMENSIONS ARE STUD TO STUD.

TYPICAL FIRE RATED STRUCTURES NOTES

1. ALL EXTERIOR WALLS ARE FIRE RATED FROM THE INSIDE, STUDS 2x6x16" O.C. UNLESS OTHERWISE NOTED.
2. ALL INTERIOR PARTITIONS ARE NON-BEARING AND STUDS ARE 2x @ 24" O.C. UNIT SEPARATIONS ARE 1 HOUR RATED AND CORRIDORS ARE 1/2 HOUR RATED. U.O.N.
3. NO DRAFTSTOPPING REQUIRED IN FLOOR OR ATTIC SPACES.
4. FIRST FLOOR (HORIZONTAL ASSEMBLY) 1 HOUR RATED, STEEL IS INDIVIDUALLY ENCAPSULATED. RESILIENT CHANNEL FOR PARKING AREA CEILING U.O.N.
5. SECOND FLOOR (HORIZONTAL ASSEMBLY) 1 HOUR RATED, STEEL IS INDIVIDUALLY SPRAY FIRE PROTECTED. IB-1 CHANNEL FOR FIRST FLOOR CEILING U.O.N.
6. THIRD FLOOR (HORIZONTAL ASSEMBLY) 1 HOUR RATED, STEEL IS INDIVIDUALLY SPRAY FIRE PROTECTED. IB-1 CHANNEL FOR FIRST FLOOR CEILING U.O.N.
7. LOFT FLOOR (HORIZONTAL ASSEMBLY) 1 HOUR RATED, STEEL IS SPRAY FIRE PROTECTED. RESILIENT CHANNEL FOR SECOND FLOOR CEILING U.O.N.
8. STAIR AND ELEVATOR SHAFTS ARE TWO HOUR RATED GYPSUM SHAFT WALL SYSTEM ENDING AT TWO HOUR CAP.

LaPlant Architecture, LLC

OFFICE:926 WILLARD DRIVE
GREEN BAY, WISCONSIN
MAILING: 1592 RUSTIC WAY
GREEN BAY, WISCONSIN 54313
Telephone: (920) 737-9769
EMAIL: laplantarchitecture@yahoo.com

© LaPlant Architecture LLC 2015

REVISION	DATE
X	XX

DATE 3/15/2016

PROJECT NO. 461462

SHEET A 2.1.2

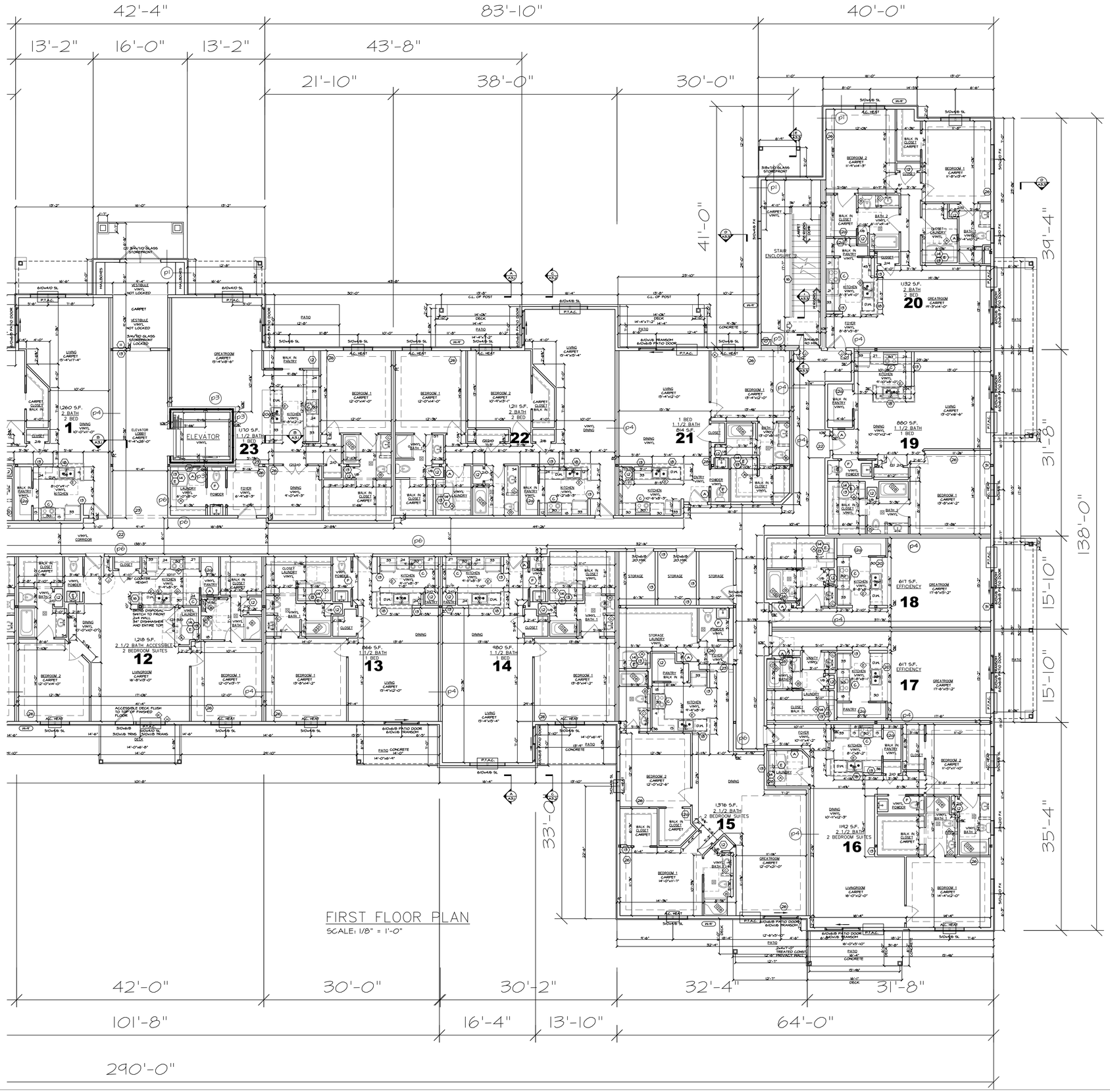

FIRST FLOOR PLAN

SCALE: 1/8" = 1'-0"

DWELLING UNIT PLAN NOTES

1. 1 HOUR RATED HORIZONTAL ASSEMBLY WITH GYPCRETE TOPPING, BIB INSULATION AND FURRING CHANNELS.
2. 1 HOUR RATED HORIZONTAL ASSEMBLY WITH GYPCRETE TOPPING, BIB INSULATION AND RESILIENT CHANNELS.
3. 1 HOUR FINISH RATED CEILING OR ENCLOSURE CAP, SEAMS DO NOT REQUIRE TAPE FOR THERE WOULD BE NO GAPS WITH TWO LAYERS.
4. 1 HOUR RATED WALL ASSEMBLY.
5. 1 HOUR RATED WALL ASSEMBLY.
6. 1 HOUR RATED EXTERIOR WALL RATED FROM THE INSIDE ONLY.
7. 1 HOUR RATED COLUMN COVERS.
8. 1 HOUR PROTECTION FOR PRIMARY LOAD BEARING STEEL BEAMS AND POSTS
9. NOT USED
10. 1'-8"x10" ENCLOSED STANDPIPE, 12"x24" CABINET FRONT AT VALVES
11. DOOR KEY LOCKED, INTERCOM CALL DEVICE
12. STACK OF (4) 12" DEEP SHELVES, START AT 28" A.F.F. THEN 14"O.C.
12a. STACK OF 3 SHELVES, START AT 42" A.F.F. THEN 14" O.C. TO ALLOW ACCESSIBLE KNEE SPACE
13. 2X6 INTERIOR WALL
14. SINGLE SHELF WITH POLE ABOVE LAUNDRY, 15"x30" CABINET.
15. FLOOR COVERING TRANSITION LINE.
16. 2x4x3'-6" HEIGHT FROM TOP OF OSB DECK TO TOP PLATE. BRACED GUARD WALL WITH WOOD CAP AND CASING. FINISH BOTH SIDES OF CAP.
17. 2x6x3'-6" HEIGHT FROM TOP OF OSB DECK TO TOP PLATE. BRACED GUARD WALL WITH WOOD CAP AND CASING. FINISH BOTH SIDES OF CAP.
18. 2x6x3'-10" HEIGHT FROM TOP OF OSB DECK TO SINGLE TOP PLATE. BRACED WALL WITH LAMINATE TOP.
19. NOT USED
20. 3'-0" DEEP COUNTER TOP - SNACK BAR, OPEN CABINET BACK.
20a. 3'-6" DEEP COUNTER TOP - SNACK BAR, OPEN CABINET BACK.
21. SLOPED CEILING UNDER STAIR. DOOR MAY HAVE STRINGER BEHIND.
22. ACOUSTIC CEILING DROPPED TO 8' A.F.F.
23. 6" WIDE GYPSUM SOFFIT DROPPED TO 8' A.F.F.
24. ATTIC SCUTTLE PANEL IN CEILING, SEE 5/A4.2
25. 9' FLAT CEILING, FLOOR ABOVE
26. TREY DROPPED 8" AND FRAMED INTO ROOM 12", 9' CEILING MINIMUM, CEILING FOR ALL BEDROOMS WITH 11' MINIMUM WIDTH.
27. TREY BUILT UP ABOVE EXTERIOR WALL HEIGHT, 12" OUT AND 8" UP.
28. FURRED WALL
29. SOUND INSULATED WALL
30. 2x2 WALL
31. STEEL COLUMN AND BEAM ABOVE, INSULATE ALL SPACE BETWEEN STEEL AND EXTERIOR SHEATHING.
32. EXTERIOR WALL - EITHER IN ATTIC OR ABOVE THE ROOF LINE, EXTERIOR SURFACE SHEATHED WITH OSB

DWELLING ELECTRICAL / MECHANICAL NOTES

A. ELECTRIC SERVICE PANEL LOCATION AND 30" MIN. x 36" CLEAR FLOOR SPACE.
B. PEDESTAL SINK WITH KNEE SPACE, TOILET TO HAVE FUTURE GRAB BAR BLOCKING.
C. MICROWAVE HOOD COMBINATION ABOVE RANGE. (IN TYPE "A" UNIT - ACCOMMODATE COUNTERTOP MICROWAVE)
D. SURFACE MOUNT ELECTRIC BASEBOARD HEAT.
E. LAUNDRY PLUMBING HOOKUP AND EXHAUST WALL, AVOID RATED WALL. 2x6 WALL, FIELD VERIFY LOCATION FOR POTENTIAL TRUSS INTERFERENCE.
F. PEDESTAL SINK DOES NOT REQUIRE KNEE SPACE, TOILET DOES NOT REQUIRE FUTURE GRAB BAR BLOCKING.

TYPICAL DWELLING MATERIAL NOTES

1. ALL WINDOWS AND DOORS IN KITCHEN, LIVING AND DINING ROOMS (COMMON AREAS) HAVE JAMBS AND CASED OPENINGS. ALL WINDOWS AND DOORS IN PRIVATE ROOMS LIKE BEDROOMS HAVE GYPSUM JAMB RETURNS. WINDOWS ARE TO PROVIDE EMERGENCY ESCAPE AND RESCUE OPENINGS AT ALL BEDROOMS WITH CLEAR OPENING MAXIMUM 44" A.F.F. (IBC 1026)
2. ALL 3/0 UNIT ENTRY DOORS HAVE LOW PROFILE THRESHOLDS, 20 MIN. RATING
3. ALL FLOORS SERVED BY THE ELEVATOR HAVE INTERIOR UNIT DOORS THAT ARE ♿ UNLESS OTHERWISE NOTED.
4. ALL LOFT FLOOR DOORS ARE ♿ UNLESS OTHERWISE NOTED.
5. ALL BATHROOM VANITY COUNTER TOPS ARE STONE WITH MOLDED SINK. ALL VANITIES ARE 42" WIDE U.O.N. SEE SHEET A/4.1 FOR TYPICAL TOILET PLAN DIMENSIONS AND BLOCKING.
6. ALL LINEN CLOSETS 20" DEEP MAX.
7. ALL TUBS ARE 60x32", ALL SHOWERS ARE 48x36".
8. PERIMETER OF BUILDING DIMENSIONS ARE TO THE SHEATHING, NOTE EXTERIOR WALL IS LABELED AS 6". INTERIOR DIMENSIONS ARE STUD TO STUD.

LaPlant Architecture, LLC
OFFICE:926 WILLARD DRIVE
GREEN BAY, WISCONSIN
MAILING: 1592 RUSTIC WAY
GREEN BAY, WISCONSIN 54313
Telephone: (920) 737-9769
EMAIL: laplantarchitecture@yahoo.com
© LaPlant Architecture LLC 2015

REVISION	DATE
X	XX

DATE 3/15/2016

PROJECT NO. 461462

SHEET A 2.1.3

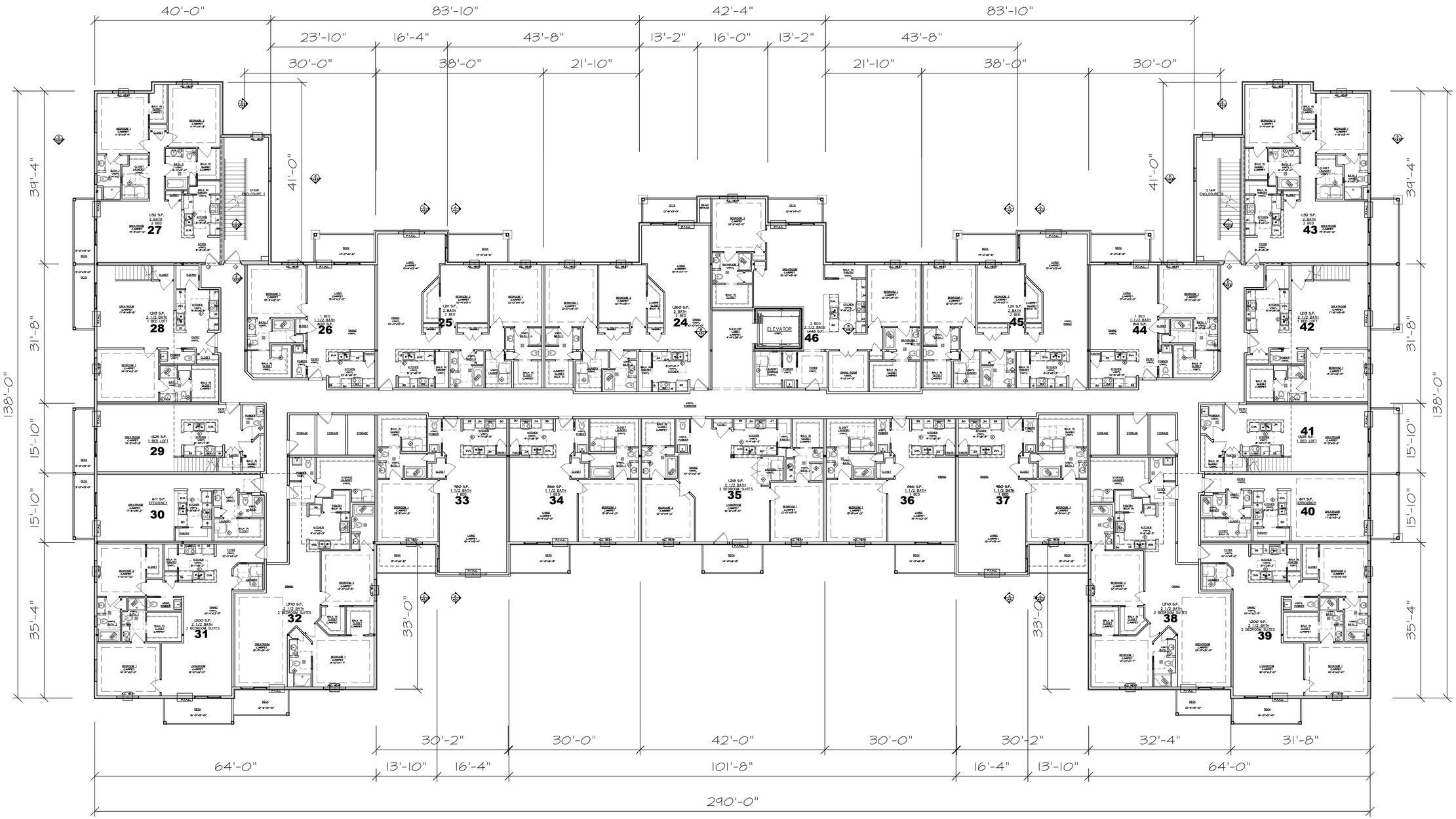

UNIT COUNT

UNIT STYLE	NUMBER OF UNITS PER FLOOR
LUXURY 2 BEDROOM 2 ½ BATH	3
2 BEDROOM 2 ½ BATH	3
2 BEDROOM 2 BATH	5
1 BEDROOM & LOFT 2 1/2 BATH	4
1 BEDROOM 1 1/2 BATH	6
EFFICIENCY	2

SECOND FLOOR PLAN

SCALE: 3/32" = 1'-0"

LaPlant Architecture, LLC
OFFICE:926 WILLARD DRIVE
GREEN BAY, WISCONSIN
MAILING: 1592 RUSTIC WAY
GREEN BAY, WISCONSIN 54313
Telephone: (920) 737-9769
EMAIL: laplantarchitecture@yahoo.com
© LaPlant Architecture LLC 2015

REVISION	DATE
X	XX

DATE 3/15/2016

PROJECT NO. 461462

SHEET A 2.2.1

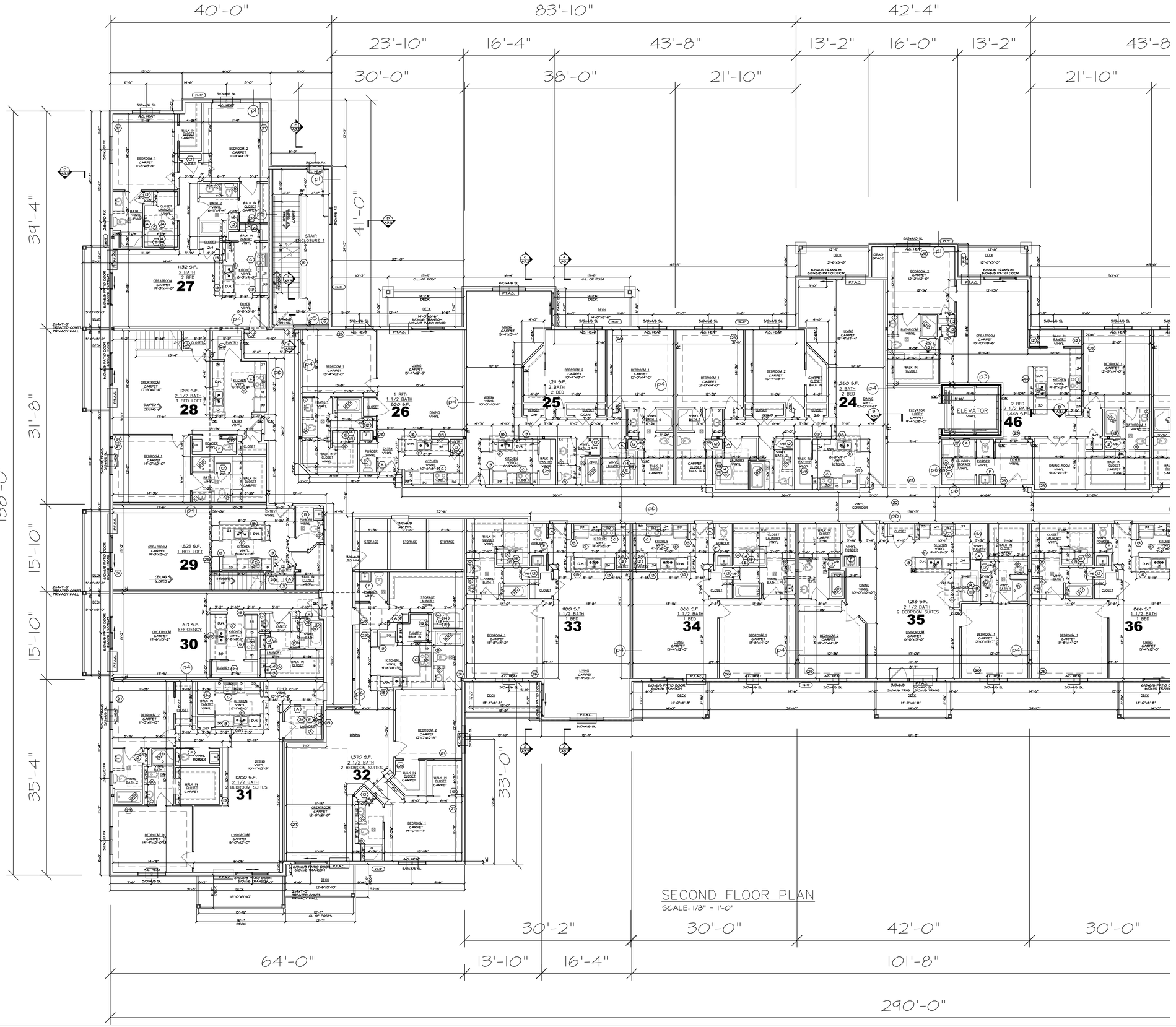

SECOND FLOOR PLAN

SCALE: 1/8" = 1'-0"

DWELLING UNIT PLAN NOTES

1. 1 HOUR RATED HORIZONTAL ASSEMBLY WITH GYPCRETE TOPPING, BIB INSULATION AND FURRING CHANNELS.
2. 1 HOUR RATED HORIZONTAL ASSEMBLY WITH GYPCRETE TOPPING, BIB INSULATION AND RESILIENT CHANNELS.
3. 1 HOUR FINISH RATED CEILING OR ENCLOSURE CAP, SEAMS DO NOT REQUIRE TAPE FOR THERE WOULD BE NO GAPS WITH TWO LAYERS.
4. 1 HOUR RATED WALL ASSEMBLY.
5. 1 HOUR RATED WALL ASSEMBLY.
6. 1 HOUR RATED EXTERIOR WALL RATED FROM THE INSIDE ONLY.
7. 1 HOUR RATED COLUMN COVERS.
8. 1 HOUR PROTECTION FOR PRIMARY LOAD BEARING STEEL BEAMS AND POSTS
9. NOT USED
10. 1'-8"X10" ENCLOSED STANDPIPE, 12"x24" CABINET FRONT AT VALVES
11. DOOR KEY LOCKED, INTERCOM CALL DEVICE
12. STACK OF (4) 12" DEEP SHELVES, START AT 28" A.F.F. THEN 14"O.C.
20. STACK OF 3 SHELVES, START AT 42" A.F.F. THEN 14" O.C. TO ALLOW ACCESSIBLE KNEE SPACE
13. 2X6 INTERIOR WALL
14. SINGLE SHELF WITH POLE ABOVE LAUNDRY, 15"x30" CABINET.
15. FLOOR COVERING TRANSITION LINE.
16. 2x4x3'-6" HEIGHT FROM TOP OF OSB DECK TO TOP PLATE. BRACED GUARD WALL WITH WOOD CAP AND CASING. FINISH BOTH SIDES OF CAP.
17. 2x6x3'-6" HEIGHT FROM TOP OF OSB DECK TO TOP PLATE. BRACED GUARD WALL WITH WOOD CAP AND CASING. FINISH BOTH SIDES OF CAP.
18. 2x6x3'-10" HEIGHT FROM TOP OF OSB DECK TO SINGLE TOP PLATE. BRACED WALL WITH LAMINATE TOP.
19. NOT USED
20. 3'-0" DEEP COUNTER TOP - SNACK BAR, OPEN CABINET BACK.
20. 3'-6" DEEP COUNTER TOP - SNACK BAR, OPEN CABINET BACK.
21. SLOPED CEILING UNDER STAIR. DOOR MAY HAVE STRINGER BEHIND.
22. ACOUSTIC CEILING DROPPED TO 8' A.F.F.
23. 6" WIDE GYPSUM SOFFIT DROPPED TO 8' A.F.F.
24. ATTIC SCUTTLE PANEL IN CEILING, SEE 5/A4.2
25. 9' FLAT CEILING, FLOOR ABOVE
26. TREY DROPPED 8" AND FRAMED INTO ROOM 12", 9' CEILING MINIMUM, CEILING FOR ALL BEDROOMS WITH 11' MINIMUM WIDTH.
27. TREY BUILT UP ABOVE EXTERIOR WALL HEIGHT, 12" OUT AND 8" UP.
28. FURRED WALL
29. SOUND INSULATED WALL
30. 2x2 WALL
31. STEEL COLUMN AND BEAM ABOVE, INSULATE ALL SPACE BETWEEN STEEL AND EXTERIOR SHEATHING.
32. EXTERIOR WALL - EITHER IN ATTIC OR ABOVE THE ROOF LINE, EXTERIOR SURFACE SHEATHED WITH OSB

DWELLING ELECTRICAL / MECHANICAL NOTES

- (A) ELECTRIC SERVICE PANEL LOCATION AND 30" MIN. x 36" CLEAR FLOOR SPACE.
- (B) PEDESTAL SINK WITH KNEE SPACE, TOILET TO HAVE FUTURE GRAB BAR BLOCKING.
- (C) MICROWAVE HOOD COMBINATION ABOVE RANGE. (IN TYPE "A" UNIT - ACCOMMODATE COUNTERTOP MICROWAVE)
- (D) SURFACE MOUNT ELECTRIC BASEBOARD HEAT.
- (E) LAUNDRY PLUMBING HOOKUP AND EXHAUST WALL, AVOID RATED WALL. 2x6 WALL, FIELD VERIFY LOCATION FOR POTENTIAL TRUSS INTERFERENCE.
- (F) PEDESTAL SINK DOES NOT REQUIRE KNEE SPACE, TOILET DOES NOT REQUIRE FUTURE GRAB BAR BLOCKING.

TYPICAL DWELLING MATERIAL NOTES

1. ALL WINDOWS AND DOORS IN KITCHEN, LIVING AND DINING ROOMS (COMMON AREAS) HAVE JAMBS AND CASED OPENINGS. ALL WINDOWS AND DOORS IN PRIVATE ROOMS LIKE BEDROOMS HAVE GYPSUM JAMB RETURNS. WINDOWS ARE TO PROVIDE EMERGENCY ESCAPE AND RESCUE OPENINGS AT ALL BEDROOMS WITH CLEAR OPENING MAXIMUM 44" A.F.F. (IBC 1026)
2. ALL 3/0 UNIT ENTRY DOORS HAVE LOW PROFILE THRESHOLDS, 20 MIN. RATING
3. ALL FLOORS SERVED BY THE ELEVATOR HAVE INTERIOR UNIT DOORS THAT ARE 3/0 UNLESS OTHERWISE NOTED.
4. ALL LOFT FLOOR DOORS ARE 3/0 UNLESS OTHERWISE NOTED.
5. ALL BATHROOM VANITY COUNTER TOPS ARE STONE WITH MOLDED SINK. ALL VANITIES ARE 42" WIDE U.O.N. SEE SHEET A/4.1 FOR TYPICAL TOILET PLAN DIMENSIONS AND BLOCKING.
6. ALL LINEN CLOSETS 20" DEEP MAX.
7. ALL TUBS ARE 60x32", ALL SHOWERS ARE 48x36".
8. PERIMETER OF BUILDING DIMENSIONS ARE TO THE SHEATHING, NOTE EXTERIOR WALL IS LABELED AS 6". INTERIOR DIMENSIONS ARE STUD TO STUD.

LaPlant Architecture, LLC

OFFICE:926 WILLARD DRIVE
GREEN BAY, WISCONSIN
MAILING: 1592 RUSTIC WAY
GREEN BAY, WISCONSIN 54313
Telephone: (920) 737-9769
EMAIL: laplantarchitecture@yahoo.com

© LaPlant Architecture LLC 2015

REVISION	DATE
X	XX

DATE 3/15/2016

PROJECT NO. 461462

SHEET A 2.2.2

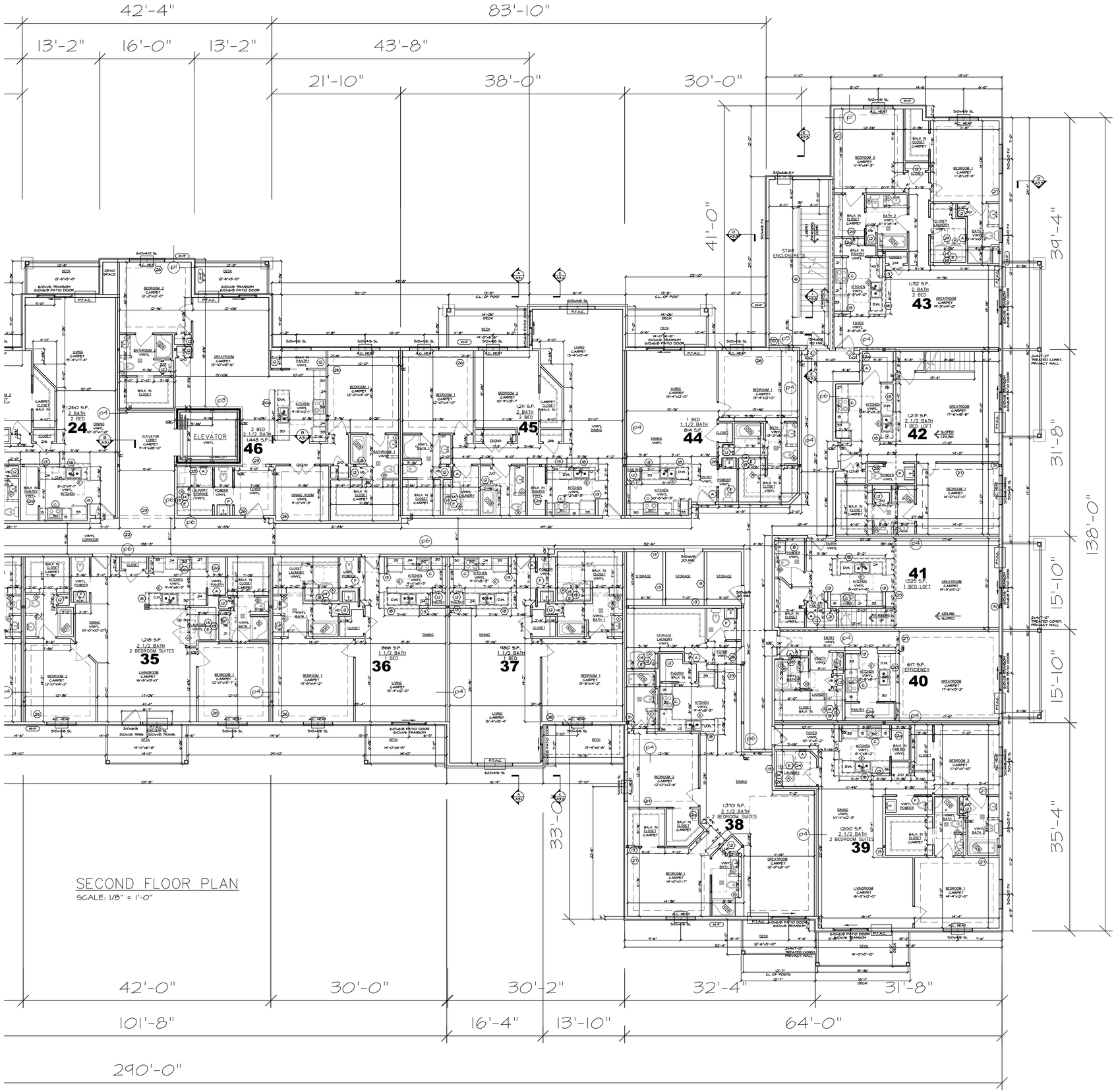

SECOND FLOOR PLAN

SCALE: 1/8" = 1'-0"

DWELLING UNIT PLAN NOTES

1. 1 HOUR RATED HORIZONTAL ASSEMBLY WITH GYPCRETE TOPPING, BIB INSULATION AND FURRING CHANNELS.
2. 1 HOUR RATED HORIZONTAL ASSEMBLY WITH GYPCRETE TOPPING, BIB INSULATION AND RESILIENT CHANNELS.
3. 1 HOUR FINISH RATED CEILING OR ENCLOSURE CAP, SEAMS DO NOT REQUIRE TAPE FOR THERE WOULD BE NO GAPS WITH TWO LAYERS.
4. 1 HOUR RATED WALL ASSEMBLY.
5. 1 HOUR RATED WALL ASSEMBLY.
6. 1 HOUR RATED EXTERIOR WALL RATED FROM THE INSIDE ONLY.
7. 1 HOUR RATED COLUMN COVERS.
8. 1 HOUR PROTECTION FOR PRIMARY LOAD BEARING STEEL BEAMS AND POSTS
9. NOT USED
10. 1'-8"x10" ENCLOSED STANDPIPE, 12"x24" CABINET FRONT AT VALVES
11. DOOR KEY LOCKED, INTERCOM CALL DEVICE
12. STACK OF (4) 12" DEEP SHELVES, START AT 28" A.F.F. THEN 14"O.C.
20. STACK OF 3 SHELVES, START AT 42" A.F.F. THEN 14" O.C. TO ALLOW ACCESSIBLE KNEE SPACE
13. 2X6 INTERIOR WALL
14. SINGLE SHELF WITH POLE ABOVE LAUNDRY, 15"x30" CABINET.
15. FLOOR COVERING TRANSITION LINE.
16. 2x4x3'-6" HEIGHT FROM TOP OF OSB DECK TO TOP PLATE. BRACED GUARD WALL WITH WOOD CAP AND CASING. FINISH BOTH SIDES OF CAP.
17. 2x6x3'-6" HEIGHT FROM TOP OF OSB DECK TO TOP PLATE. BRACED GUARD WALL WITH WOOD CAP AND CASING. FINISH BOTH SIDES OF CAP.
18. 2x6x3'-10" HEIGHT FROM TOP OF OSB DECK TO SINGLE TOP PLATE. BRACED WALL WITH LAMINATE TOP.
19. NOT USED
20. 3'-0" DEEP COUNTER TOP - SNACK BAR, OPEN CABINET BACK.
20a. 3'-6" DEEP COUNTER TOP - SNACK BAR, OPEN CABINET BACK.
21. SLOPED CEILING UNDER STAIR. DOOR MAY HAVE STRINGER BEHIND.
22. ACOUSTIC CEILING DROPPED TO 8' A.F.F.
23. 6" WIDE GYPSUM SOFFIT DROPPED TO 8' A.F.F.
24. ATTIC SCUTTLE PANEL IN CEILING, SEE 5/A4.2
25. 9' FLAT CEILING, FLOOR ABOVE
26. TREY DROPPED 8" AND FRAMED INTO ROOM 12", 9' CEILING MINIMUM, CEILING FOR ALL BEDROOMS WITH 11' MINIMUM WIDTH.
27. TREY BUILT UP ABOVE EXTERIOR WALL HEIGHT, 12" OUT AND 8" UP.
28. FURRED WALL
29. SOUND INSULATED WALL
30. 2x2 WALL
31. STEEL COLUMN AND BEAM ABOVE, INSULATE ALL SPACE BETWEEN STEEL AND EXTERIOR SHEATHING.
32. EXTERIOR WALL - EITHER IN ATTIC OR ABOVE THE ROOF LINE, EXTERIOR SURFACE SHEATHED WITH OSB

DWELLING ELECTRICAL / MECHANICAL NOTES

- A. ELECTRIC SERVICE PANEL LOCATION AND 30" MIN. x 36" CLEAR FLOOR SPACE.
- B. PEDESTAL SINK WITH KNEE SPACE, TOILET TO HAVE FUTURE GRAB BAR BLOCKING.
- C. MICROWAVE HOOD COMBINATION ABOVE RANGE. (IN TYPE "A" UNIT - ACCOMMODATE COUNTERTOP MICROWAVE)
- D. SURFACE MOUNT ELECTRIC BASEBOARD HEAT.
- E. LAUNDRY PLUMBING HOOKUP AND EXHAUST WALL, AVOID RATED WALL. 2x6 WALL, FIELD VERIFY LOCATION FOR POTENTIAL TRUSS INTERFERENCE.
- F. PEDESTAL SINK DOES NOT REQUIRE KNEE SPACE, TOILET DOES NOT REQUIRE FUTURE GRAB BAR BLOCKING.

TYPICAL DWELLING MATERIAL NOTES

1. ALL WINDOWS AND DOORS IN KITCHEN, LIVING AND DINING ROOMS (COMMON AREAS) HAVE JAMBS AND CASED OPENINGS. ALL WINDOWS AND DOORS IN PRIVATE ROOMS LIKE BEDROOMS HAVE GYPSUM JAMB RETURNS. WINDOWS ARE TO PROVIDE EMERGENCY ESCAPE AND RESCUE OPENINGS AT ALL BEDROOMS WITH CLEAR OPENING MAXIMUM 44" A.F.F. (IBC 1026)
2. ALL 3/0 UNIT ENTRY DOORS HAVE LOW PROFILE THRESHOLDS, 20 MIN. RATING
3. ALL FLOORS SERVED BY THE ELEVATOR HAVE INTERIOR UNIT DOORS THAT ARE 3' UNLESS OTHERWISE NOTED.
4. ALL LOFT FLOOR DOORS ARE 2' UNLESS OTHERWISE NOTED.
5. ALL BATHROOM VANITY COUNTER TOPS ARE STONE WITH MOLDED SINK. ALL VANITIES ARE 42" WIDE U.O.N. SEE SHEET A/4.1 FOR TYPICAL TOILET PLAN DIMENSIONS AND BLOCKING.
6. ALL LINEN CLOSETS 20" DEEP MAX.
7. ALL TUBS ARE 60x32", ALL SHOWERS ARE 48x36".
8. PERIMETER OF BUILDING DIMENSIONS ARE TO THE SHEATHING, NOTE EXTERIOR WALL IS LABELED AS 6". INTERIOR DIMENSIONS ARE STUD TO STUD.

LaPlant Architecture, LLC

OFFICE:926 WILLARD DRIVE
GREEN BAY, WISCONSIN
MAILING: 1592 RUSTIC WAY
GREEN BAY, WISCONSIN 54313
Telephone: (920) 737-9769
EMAIL: laplantarchitecture@yahoo.com

© LaPlant Architecture LLC 2015

REVISION	DATE
X	XX

DATE 3/15/2016

PROJECT NO. 461462

SHEET A 2.2.3

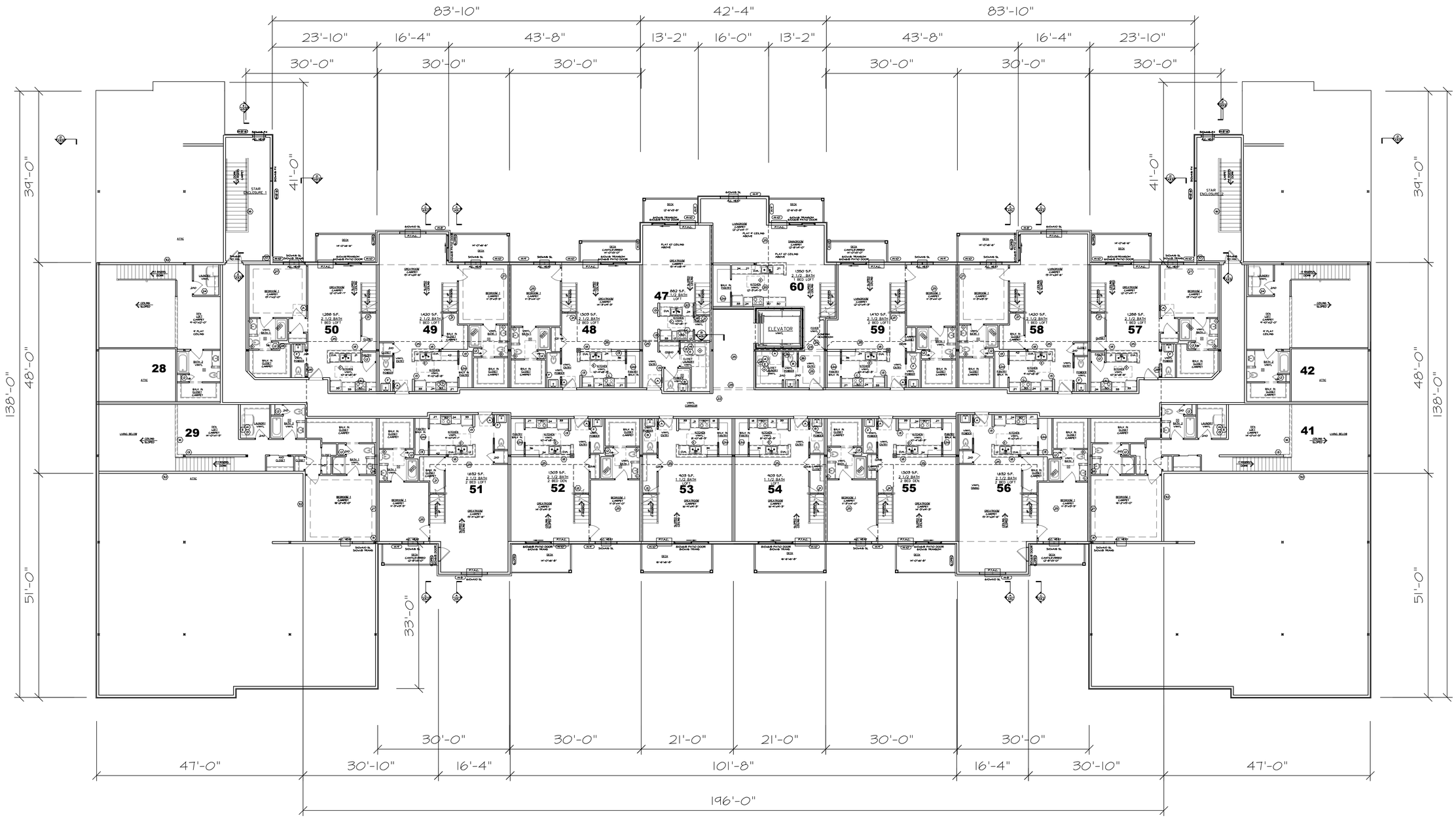

UNIT COUNT	
UNIT STYLE	NUMBER OF UNITS PER FLOOR
2 BEDROOM & LOFT 2 ½ BATH	6
1 BEDROOM & LOFT 2 1/2 BATH	5
LOFT 1 1/2 BATH	3

THIRD FLOOR PLAN

SCALE: 3/32" = 1'-0"

LaPlant Architecture, LLC

OFFICE:926 WILLARD DRIVE
GREEN BAY, WISCONSIN
MAILING: 1592 RUSTIC WAY
GREEN BAY, WISCONSIN 54313
Telephone: (920) 737-9769
EMAIL: laplantarchitecture@yahoo.com

© LaPlant Architecture LLC 2015

REVISION	DATE
X	XX

DATE 3/15/2016

PROJECT NO. 461462

SHEET A 2.3.1

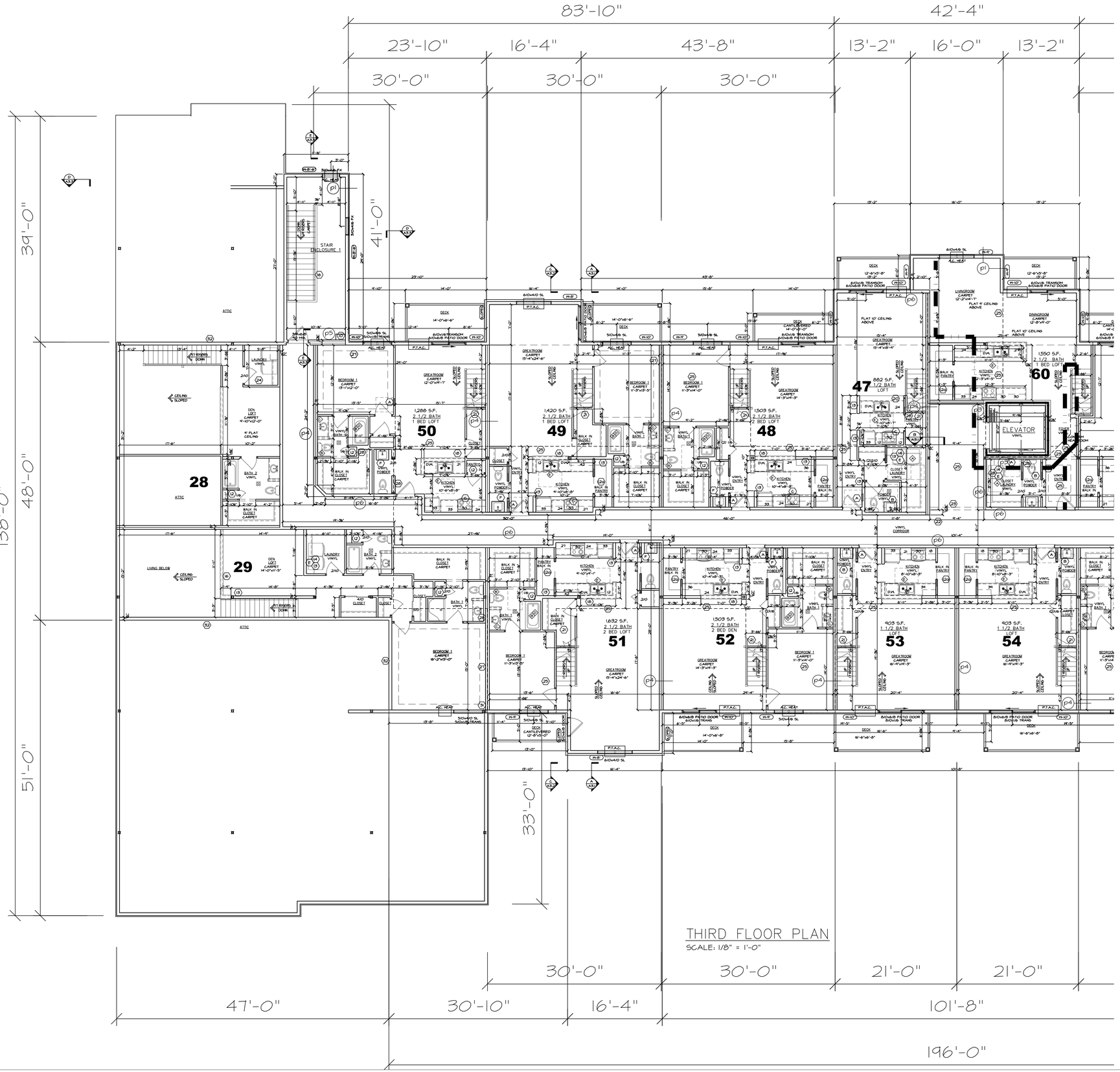

THIRD FLOOR PLAN

SCALE: 1/8" = 1'-0"

DWELLING UNIT PLAN NOTES

1. 1 HOUR RATED HORIZONTAL ASSEMBLY WITH GYPCRETE TOPPING, BIB INSULATION AND FURRING CHANNELS.
2. 1 HOUR RATED HORIZONTAL ASSEMBLY WITH GYPCRETE TOPPING, BIB INSULATION AND RESILIENT CHANNELS.
3. 1 HOUR FINISH RATED CEILING OR ENCLOSURE CAP, SEAMS DO NOT REQUIRE TAPE FOR THERE WOULD BE NO GAPS WITH TWO LAYERS.
4. 1 HOUR RATED WALL ASSEMBLY.
5. 1 HOUR RATED WALL ASSEMBLY.
6. 1 HOUR RATED EXTERIOR WALL RATED FROM THE INSIDE ONLY.
7. 1 HOUR RATED COLUMN COVERS.
8. 1 HOUR PROTECTION FOR PRIMARY LOAD BEARING STEEL BEAMS AND POSTS
9. NOT USED
10. 1'-8"x10" ENCLOSED STANDPIPE, 12"x24" CABINET FRONT AT VALVES
11. DOOR KEY LOCKED, INTERCOM CALL DEVICE
12. STACK OF (4) 12" DEEP SHELVES, START AT 28" A.F.F. THEN 14"O.C.
20. STACK OF 3 SHELVES, START AT 42" A.F.F. THEN 14" O.C. TO ALLOW ACCESSIBLE KNEE SPACE
13. 2X6 INTERIOR WALL
14. SINGLE SHELF WITH POLE ABOVE LAUNDRY, 15"x30" CABINET.
15. FLOOR COVERING TRANSITION LINE.
16. 2x4x3'-6" HEIGHT FROM TOP OF OSB DECK TO TOP PLATE. BRACED GUARD WALL WITH WOOD CAP AND CASING. FINISH BOTH SIDES OF CAP.
17. 2x6x3'-6" HEIGHT FROM TOP OF OSB DECK TO TOP PLATE. BRACED GUARD WALL WITH WOOD CAP AND CASING. FINISH BOTH SIDES OF CAP.
18. 2x6x3'-10" HEIGHT FROM TOP OF OSB DECK TO SINGLE TOP PLATE. BRACED WALL WITH LAMINATE TOP.
19. NOT USED
20. 3'-0" DEEP COUNTER TOP - SNACK BAR, OPEN CABINET BACK.
20a. 3'-6" DEEP COUNTER TOP - SNACK BAR, OPEN CABINET BACK.
21. SLOPED CEILING UNDER STAIR. DOOR MAY HAVE STRINGER BEHIND.
22. ACOUSTIC CEILING DROPPED TO 8' A.F.F.
23. 6" WIDE GYPSUM SOFFIT DROPPED TO 8' A.F.F.
24. ATTIC SCUTTLE PANEL IN CEILING, SEE 5/A4.2
25. 9' FLAT CEILING, FLOOR ABOVE
26. TREY DROPPED 8" AND FRAMED INTO ROOM 12", 9' CEILING MINIMUM, CEILING FOR ALL BEDROOMS WITH 11' MINIMUM WIDTH.
27. TREY BUILT UP ABOVE EXTERIOR WALL HEIGHT, 12" OUT AND 8" UP.
28. FURRED WALL
29. SOUND INSULATED WALL
30. 2X2 WALL
31. STEEL COLUMN AND BEAM ABOVE, INSULATE ALL SPACE BETWEEN STEEL AND EXTERIOR SHEATHING.
32. EXTERIOR WALL - EITHER IN ATTIC OR ABOVE THE ROOF LINE, EXTERIOR SURFACE SHEATHED WITH OSB

DWELLING ELECTRICAL / MECHANICAL NOTES

- (A) ELECTRIC SERVICE PANEL LOCATION AND 30" MIN. x 36" CLEAR FLOOR SPACE.
- (B) PEDESTAL SINK WITH KNEE SPACE, TOILET TO HAVE FUTURE GRAB BAR BLOCKING.
- (C) MICROWAVE HOOD COMBINATION ABOVE RANGE. (IN TYPE "A" UNIT - ACCOMMODATE COUNTERTOP MICROWAVE)
- (D) SURFACE MOUNT ELECTRIC BASEBOARD HEAT.
- (E) LAUNDRY PLUMBING HOOKUP AND EXHAUST WALL, AVOID RATED WALL. 2x6 WALL, FIELD VERIFY LOCATION FOR POTENTIAL TRUSS INTERFERENCE.
- (F) PEDESTAL SINK DOES NOT REQUIRE KNEE SPACE, TOILET DOES NOT REQUIRE FUTURE GRAB BAR BLOCKING.

TYPICAL DWELLING MATERIAL NOTES

1. ALL WINDOWS AND DOORS IN KITCHEN, LIVING AND DINING ROOMS (COMMON AREAS) HAVE JAMBS AND CASED OPENINGS. ALL WINDOWS AND DOORS IN PRIVATE ROOMS LIKE BEDROOMS HAVE GYPSUM JAMB RETURNS. WINDOWS ARE TO PROVIDE EMERGENCY ESCAPE AND RESCUE OPENINGS AT ALL BEDROOMS WITH CLEAR OPENING MAXIMUM 44" A.F.F. (IBC 1026)
2. ALL 3/0 UNIT ENTRY DOORS HAVE LOW PROFILE THRESHOLDS, 20 MIN. RATING
3. ALL FLOORS SERVED BY THE ELEVATOR HAVE INTERIOR UNIT DOORS THAT ARE 3/0 UNLESS OTHERWISE NOTED.
4. ALL LOFT FLOOR DOORS ARE 3/0 UNLESS OTHERWISE NOTED.
5. ALL BATHROOM VANITY COUNTER TOPS ARE STONE WITH MOLDED SINK. ALL VANITIES ARE 42" WIDE U.O.N. SEE SHEET A/4.1 FOR TYPICAL TOILET PLAN DIMENSIONS AND BLOCKING.
6. ALL LINEN CLOSETS 20" DEEP MAX.
7. ALL TUBS ARE 60x32", ALL SHOWERS ARE 48x36".
8. PERIMETER OF BUILDING DIMENSIONS ARE TO THE SHEATHING, NOTE EXTERIOR WALL IS LABELED AS 6". INTERIOR DIMENSIONS ARE STUD TO STUD.

LaPlant Architecture, LLC

OFFICE:926 WILLARD DRIVE
GREEN BAY, WISCONSIN
MAILING: 1592 RUSTIC WAY
GREEN BAY, WISCONSIN 54313
Telephone: (920) 737-9769
EMAIL laplantarchitecture@yahoo.com

© LaPlant Architecture LLC 2015

REVISION	DATE
X	XX

DATE 3/15/2016

PROJECT NO. 461462

SHEET A 2.3.2

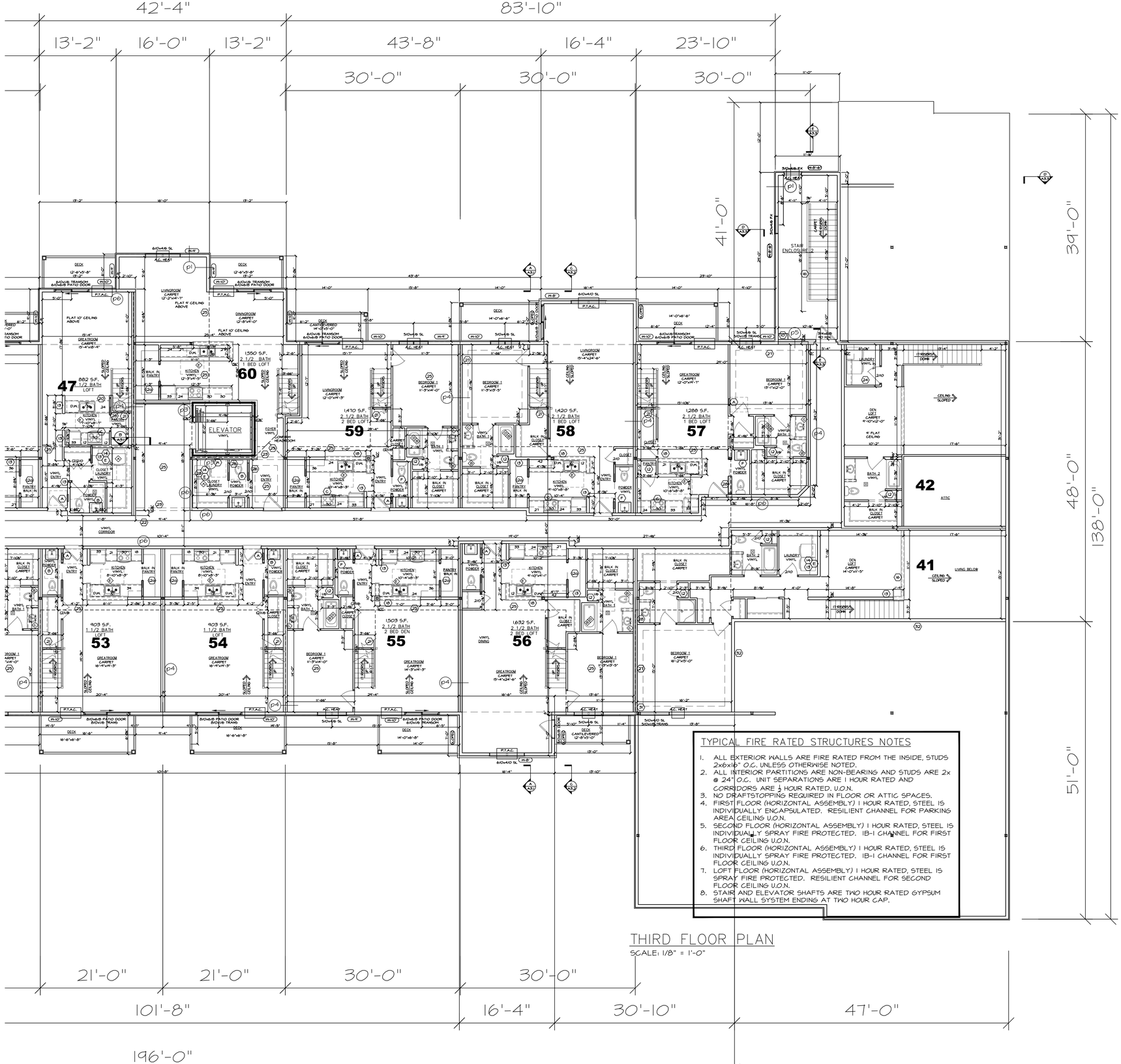

TYPICAL FIRE RATED STRUCTURES NOTES

1. ALL EXTERIOR WALLS ARE FIRE RATED FROM THE INSIDE, STUDS 2x6x16" O.C. UNLESS OTHERWISE NOTED.
2. ALL INTERIOR PARTITIONS ARE NON-BEARING AND STUDS ARE 2x @ 24" O.C. UNIT SEPARATIONS ARE 1 HOUR RATED AND CORRIDORS ARE ½ HOUR RATED. U.O.N.
3. NO DRAFTSTOPPING REQUIRED IN FLOOR OR ATTIC SPACES.
4. FIRST FLOOR (HORIZONTAL ASSEMBLY) 1 HOUR RATED, STEEL IS INDIVIDUALLY ENCAPSULATED. RESILIENT CHANNEL FOR PARKING AREA CEILINGS U.O.N.
5. SECOND FLOOR (HORIZONTAL ASSEMBLY) 1 HOUR RATED, STEEL IS INDIVIDUALLY SPRAY FIRE PROTECTED. IB-1 CHANNEL FOR FIRST FLOOR CEILING U.O.N.
6. THIRD FLOOR (HORIZONTAL ASSEMBLY) 1 HOUR RATED, STEEL IS INDIVIDUALLY SPRAY FIRE PROTECTED. IB-1 CHANNEL FOR FIRST FLOOR CEILING U.O.N.
7. LOFT FLOOR (HORIZONTAL ASSEMBLY) 1 HOUR RATED, STEEL IS SPRAY FIRE PROTECTED. RESILIENT CHANNEL FOR SECOND FLOOR CEILING U.O.N.
8. STAIR AND ELEVATOR SHAFTS ARE TWO HOUR RATED GYPSUM SHAFT WALL SYSTEM ENDING AT TWO HOUR CAP.

THIRD FLOOR PLAN

SCALE: 1/8" = 1'-0"

DWELLING UNIT PLAN NOTES

1. 1 HOUR RATED HORIZONTAL ASSEMBLY WITH GYPCRETE TOPPING, BIB INSULATION AND FURRING CHANNELS.
2. 1 HOUR RATED HORIZONTAL ASSEMBLY WITH GYPCRETE TOPPING, BIB INSULATION AND RESILIENT CHANNELS.
3. 1 HOUR FINISH RATED CEILING OR ENCLOSURE CAP, SEAMS DO NOT REQUIRE TAPE FOR THERE WOULD BE NO GAPS WITH TWO LAYERS.
4. 1 HOUR RATED WALL ASSEMBLY.
5. 1 HOUR RATED WALL ASSEMBLY.
6. 1 HOUR RATED EXTERIOR WALL RATED FROM THE INSIDE ONLY.
7. 1 HOUR RATED COLUMN COVERS.
8. 1 HOUR PROTECTION FOR PRIMARY LOAD BEARING STEEL BEAMS AND POSTS
9. NOT USED
10. 1'-8"x10" ENCLOSED STANDPIPE, 12"x24" CABINET FRONT AT VALVES
11. DOOR KEY LOCKED, INTERCOM CALL DEVICE
12. STACK OF (4) 12" DEEP SHELVES, START AT 28" A.F.F. THEN 14"O.C.
20. STACK OF 3 SHELVES, START AT 42" A.F.F. THEN 14" O.C. TO ALLOW ACCESSIBLE KNEE SPACE
13. 2X6 INTERIOR WALL
14. SINGLE SHELF WITH POLE ABOVE LAUNDRY, 15"x30" CABINET.
15. FLOOR COVERING TRANSITION LINE.
16. 2x4x3'-6" HEIGHT FROM TOP OF OSB DECK TO TOP PLATE. BRACED GUARD WALL WITH WOOD CAP AND CASING. FINISH BOTH SIDES OF CAP.
17. 2x6x3'-6" HEIGHT FROM TOP OF OSB DECK TO TOP PLATE. BRACED GUARD WALL WITH WOOD CAP AND CASING. FINISH BOTH SIDES OF CAP.
18. 2x6x3'-10" HEIGHT FROM TOP OF OSB DECK TO SINGLE TOP PLATE. BRACED WALL WITH LAMINATE TOP.
19. NOT USED
20. 3'-0" DEEP COUNTER TOP - SNACK BAR, OPEN CABINET BACK.
20a. 3'-6" DEEP COUNTER TOP - SNACK BAR, OPEN CABINET BACK.
21. SLOPED CEILING UNDER STAIR. DOOR MAY HAVE STRINGER BEHIND.
22. ACOUSTIC CEILING DROPPED TO 8' A.F.F.
23. 6" WIDE GYPSUM SOFFIT DROPPED TO 8' A.F.F.
24. ATTIC SCUTTLE PANEL IN CEILING, SEE 5/A4.2
25. 9' FLAT CEILING, FLOOR ABOVE
26. TREY DROPPED 8" AND FRAMED INTO ROOM 12", 9' CEILING MINIMUM, CEILING FOR ALL BEDROOMS WITH 11' MINIMUM WIDTH.
27. TREY BUILT UP ABOVE EXTERIOR WALL HEIGHT, 12" OUT AND 8" UP.
28. FURRED WALL
29. SOUND INSULATED WALL
30. 2x2 WALL
31. STEEL COLUMN AND BEAM ABOVE, INSULATE ALL SPACE BETWEEN STEEL AND EXTERIOR SHEATHING.
32. EXTERIOR WALL - EITHER IN ATTIC OR ABOVE THE ROOF LINE, EXTERIOR SURFACE SHEATHED WITH OSB

DWELLING ELECTRICAL / MECHANICAL NOTES

- (A) ELECTRIC SERVICE PANEL LOCATION AND 30" MIN. x 36" CLEAR FLOOR SPACE.
- (B) PEDESTAL SINK WITH KNEE SPACE, TOILET TO HAVE FUTURE GRAB BAR BLOCKING.
- (C) MICROWAVE HOOD COMBINATION ABOVE RANGE. (IN TYPE "A" UNIT - ACCOMMODATE COUNTERTOP MICROWAVE)
- (D) SURFACE MOUNT ELECTRIC BASEBOARD HEAT.
- (E) LAUNDRY PLUMBING HOOKUP AND EXHAUST WALL, AVOID RATED WALL. 2x6 WALL, FIELD VERIFY LOCATION FOR POTENTIAL TRUSS INTERFERENCE.
- (F) PEDESTAL SINK DOES NOT REQUIRE KNEE SPACE, TOILET DOES NOT REQUIRE FUTURE GRAB BAR BLOCKING.

TYPICAL DWELLING MATERIAL NOTES

1. ALL WINDOWS AND DOORS IN KITCHEN, LIVING AND DINING ROOMS (COMMON AREAS) HAVE JAMBS AND CASED OPENINGS. ALL WINDOWS AND DOORS IN PRIVATE ROOMS LIKE BEDROOMS HAVE GYPSUM JAMB RETURNS. WINDOWS ARE TO PROVIDE EMERGENCY ESCAPE AND RESCUE OPENINGS AT ALL BEDROOMS WITH CLEAR OPENING MAXIMUM 44" A.F.F. (IBC 1026)
2. ALL 3/0 UNIT ENTRY DOORS HAVE LOW PROFILE THRESHOLDS, 20 MIN. RATING
3. ALL FLOORS SERVED BY THE ELEVATOR HAVE INTERIOR UNIT DOORS THAT ARE 3/8 UNLESS OTHERWISE NOTED.
4. ALL LOFT FLOOR DOORS ARE 3/8 UNLESS OTHERWISE NOTED.
5. ALL BATHROOM VANITY COUNTER TOPS ARE STONE WITH MOLDED SINK. ALL VANITIES ARE 42" WIDE U.O.N. SEE SHEET A/4.1 FOR TYPICAL TOILET PLAN DIMENSIONS AND BLOCKING.
6. ALL LINEN CLOSETS 20" DEEP MAX.
7. ALL TUBS ARE 60x32", ALL SHOWERS ARE 48x36".
8. PERIMETER OF BUILDING DIMENSIONS ARE TO THE SHEATHING, NOTE EXTERIOR WALL IS LABELED AS 6". INTERIOR DIMENSIONS ARE STUD TO STUD.

LaPlant Architecture, LLC
laplantarchitecture@yahoo.com
OFFICE:926 WILLARD DRIVE
GREEN BAY, WISCONSIN
MAILING: 1592 RUSTIC WAY
GREEN BAY, WISCONSIN 54313
Telephone: (920) 737-9769
EMAIL:

© LaPlant Architecture LLC 2015

REVISION	DATE
X	XX

DATE 3/15/2016

PROJECT NO. 461462

SHEET A 2.3.3

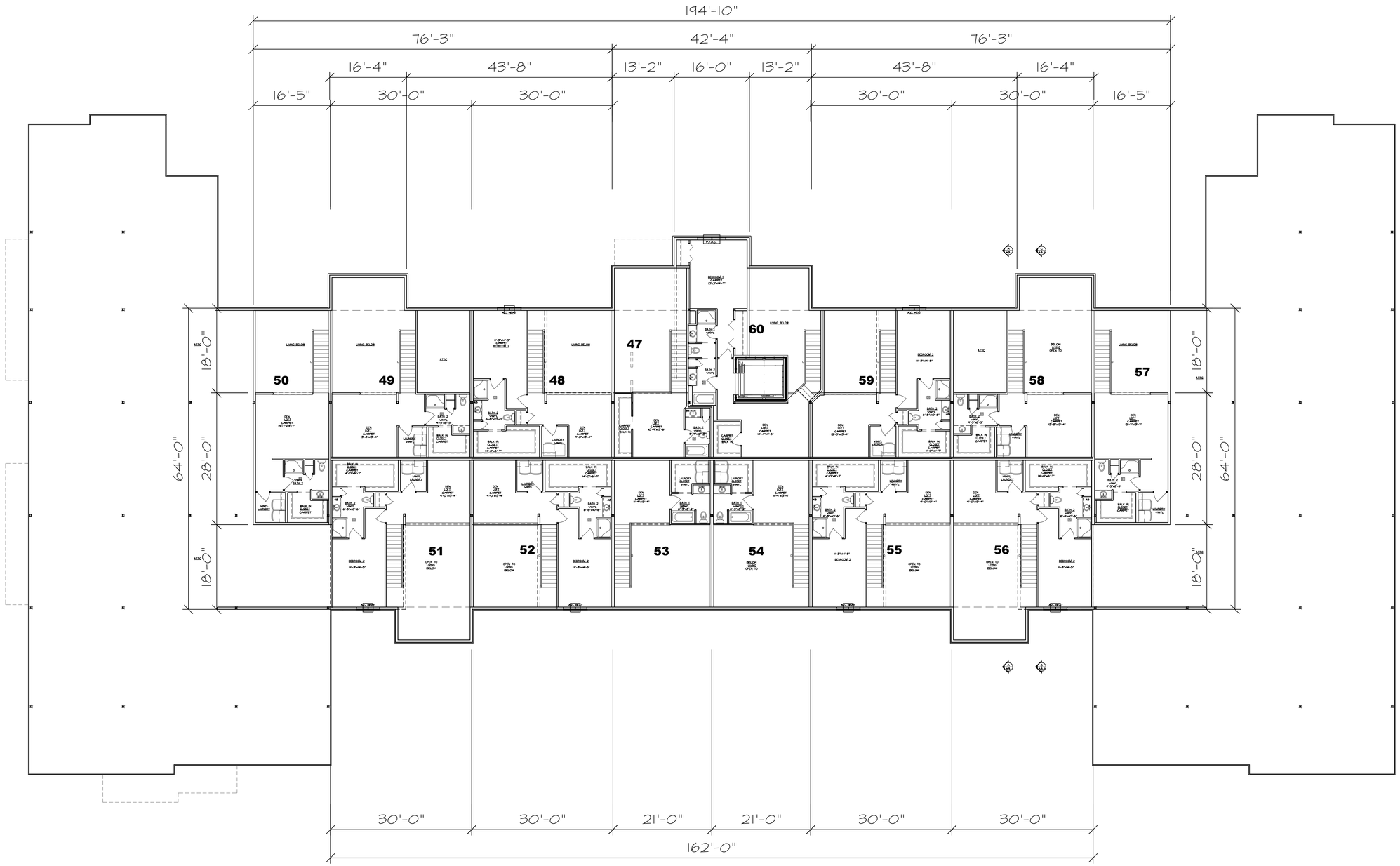

LOFT FLOOR PLAN

SCALE: 3/32" = 1'-0"

LaPlant
Architecture, LLC
OFFICE:926 WILLARD DRIVE
GREEN BAY, WISCONSIN
MAILING: 1592 RUSTIC WAY
GREEN BAY, WISCONSIN 54313
Telephone: (920) 737-9769
EMAIL: laplantarchitecture@yahoo.com
© LaPlant Architecture LLC 2015

REVISION	DATE
X	XX

DATE
3/8/2016

PROJECT NO.
461462

SHEET
A
2.4.1

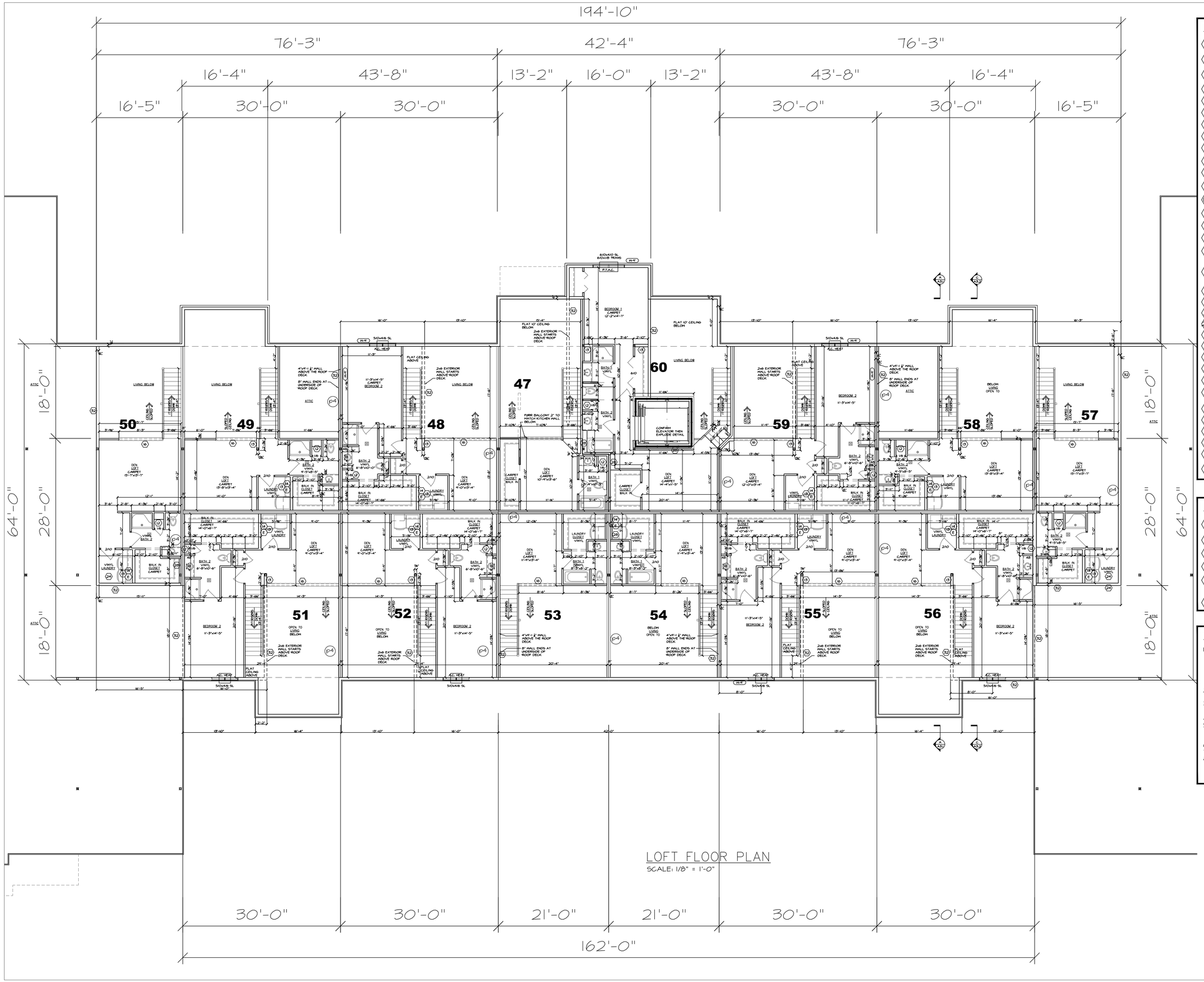

LOFT FLOOR PLAN

SCALE: 1/8" = 1'-0"

DWELLING UNIT PLAN NOTES

1. 1 HOUR RATED HORIZONTAL ASSEMBLY WITH GYPCRETE TOPPING, BIB INSULATION AND FURRING CHANNELS.
2. 1 HOUR RATED HORIZONTAL ASSEMBLY WITH GYPCRETE TOPPING, BIB INSULATION AND RESILIENT CHANNELS.
3. 1 HOUR FINISH RATED CEILING OR ENCLOSURE CAP, SEAMS DO NOT REQUIRE TAPE FOR THERE WOULD BE NO GAPS WITH TWO LAYERS.
4. 1 HOUR RATED WALL ASSEMBLY.
5. 1 HOUR RATED WALL ASSEMBLY.
6. 1 HOUR RATED EXTERIOR WALL RATED FROM THE INSIDE ONLY.
7. 1 HOUR RATED COLUMN COVERS.
8. 1 HOUR PROTECTION FOR PRIMARY LOAD BEARING STEEL BEAMS AND POSTS
9. NOT USED
10. 1'-8"x10" ENCLOSED STANDPIPE, 12"x24" CABINET FRONT AT VALVES
11. DOOR KEY LOCKED, INTERCOM CALL DEVICE
12. STACK OF (4) 12" DEEP SHELVES, START AT 28" A.F.F. THEN 14"O.C.
20. STACK OF 3 SHELVES, START AT 42" A.F.F. THEN 14" O.C. TO ALLOW ACCESSIBLE KNEE SPACE
13. 2X6 INTERIOR WALL
14. SINGLE SHELF WITH POLE ABOVE LAUNDRY, 15"x30" CABINET.
15. FLOOR COVERING TRANSITION LINE.
16. 2x4x3'-6" HEIGHT FROM TOP OF OSB DECK TO TOP PLATE. BRACED GUARD WALL WITH WOOD CAP AND CASING. FINISH BOTH SIDES OF CAP.
17. 2x6x3'-6" HEIGHT FROM TOP OF OSB DECK TO TOP PLATE. BRACED GUARD WALL WITH WOOD CAP AND CASING. FINISH BOTH SIDES OF CAP.
18. 2x6x3'-10" HEIGHT FROM TOP OF OSB DECK TO SINGLE TOP PLATE. BRACED WALL WITH LAMINATE TOP.
19. NOT USED
20. 3'-0" DEEP COUNTER TOP - SNACK BAR, OPEN CABINET BACK.
20a. 3'-6" DEEP COUNTER TOP - SNACK BAR, OPEN CABINET BACK.
21. SLOPED CEILING UNDER STAIR. DOOR MAY HAVE STRINGER BEHIND.
22. ACOUSTIC CEILING DROPPED TO 8' A.F.F.
23. 6" WIDE GYPSUM SOFFIT DROPPED TO 8' A.F.F.
24. ATTIC SCUTTLE PANEL IN CEILING, SEE 5/A4.2
25. 9' FLAT CEILING, FLOOR ABOVE
26. TREY DROPPED 8" AND FRAMED INTO ROOM 12", 9' CEILING MINIMUM, CEILING FOR ALL BEDROOMS WITH 11' MINIMUM WIDTH.
27. TREY BUILT UP ABOVE EXTERIOR WALL HEIGHT, 12" OUT AND 8" UP.
28. FURRED WALL
29. SOUND INSULATED WALL
30. 2x2 WALL
31. STEEL COLUMN AND BEAM ABOVE, INSULATE ALL SPACE BETWEEN STEEL AND EXTERIOR SHEATHING.
32. EXTERIOR WALL - EITHER IN ATTIC OR ABOVE THE ROOF LINE, EXTERIOR SURFACE SHEATHED WITH OSB

DWELLING ELECTRICAL / MECHANICAL NOTES

- A. ELECTRIC SERVICE PANEL LOCATION AND 30" MIN. x 36" CLEAR FLOOR SPACE.
- B. PEDESTAL SINK WITH KNEE SPACE, TOILET TO HAVE FUTURE GRAB BAR BLOCKING.
- C. MICROWAVE HOOD COMBINATION ABOVE RANGE. (IN TYPE "A" UNIT - ACCOMMODATE COUNTERTOP MICRONAVE)
- D. SURFACE MOUNT ELECTRIC BASEBOARD HEAT.
- E. LAUNDRY PLUMBING HOOKUP AND EXHAUST WALL, AVOID RATED WALL. 2x6 WALL, FIELD VERIFY LOCATION FOR POTENTIAL TRUSS INTERFERENCE.
- F. PEDESTAL SINK DOES NOT REQUIRE KNEE SPACE, TOILET DOES NOT REQUIRE FUTURE GRAB BAR BLOCKING.

TYPICAL DWELLING MATERIAL NOTES

1. ALL WINDOWS AND DOORS IN KITCHEN, LIVING AND DINING ROOMS (COMMON AREAS) HAVE JAMBS AND CASED OPENINGS. ALL WINDOWS AND DOORS IN PRIVATE ROOMS LIKE BEDROOMS HAVE GYPSUM JAMB RETURNS. WINDOWS ARE TO PROVIDE EMERGENCY ESCAPE AND RESCUE OPENINGS AT ALL BEDROOMS WITH CLEAR OPENING MAXIMUM 44" A.F.F. (IBC 1026)
2. ALL 3/0 UNIT ENTRY DOORS HAVE LOW PROFILE THRESHOLDS, 20 MIN. RATING
3. ALL FLOORS SERVED BY THE ELEVATOR HAVE INTERIOR UNIT DOORS THAT ARE ⅜ UNLESS OTHERWISE NOTED.
4. ALL LOFT FLOOR DOORS ARE ⅜ UNLESS OTHERWISE NOTED.
5. ALL BATHROOM VANITY COUNTER TOPS ARE STONE WITH MOLDED SINK. ALL VANITIES ARE 42" WIDE U.O.N. SEE SHEET A/4.1 FOR TYPICAL TOILET PLAN DIMENSIONS AND BLOCKING.
6. ALL LINEN CLOSETS 20" DEEP MAX.
7. ALL TUBS ARE 60x32", ALL SHOWERS ARE 48x36".
8. PERIMETER OF BUILDING DIMENSIONS ARE TO THE SHEATHING, NOTE EXTERIOR WALL IS LABELED AS 6". INTERIOR DIMENSIONS ARE STUD TO STUD.

LaPlant Architecture, LLC

OFFICE:926 WILLARD DRIVE
GREEN BAY, WISCONSIN
MAILING: 1592 RUSTIC WAY
GREEN BAY, WISCONSIN 54313
Telephone: (920) 737-9769
EMAIL: laplantarchitecture@yahoo.com

© LaPlant Architecture LLC 2015

REVISION	DATE
X	XX

DATE 3/8/2016

PROJECT NO. 461462

SHEET A 2.4.2

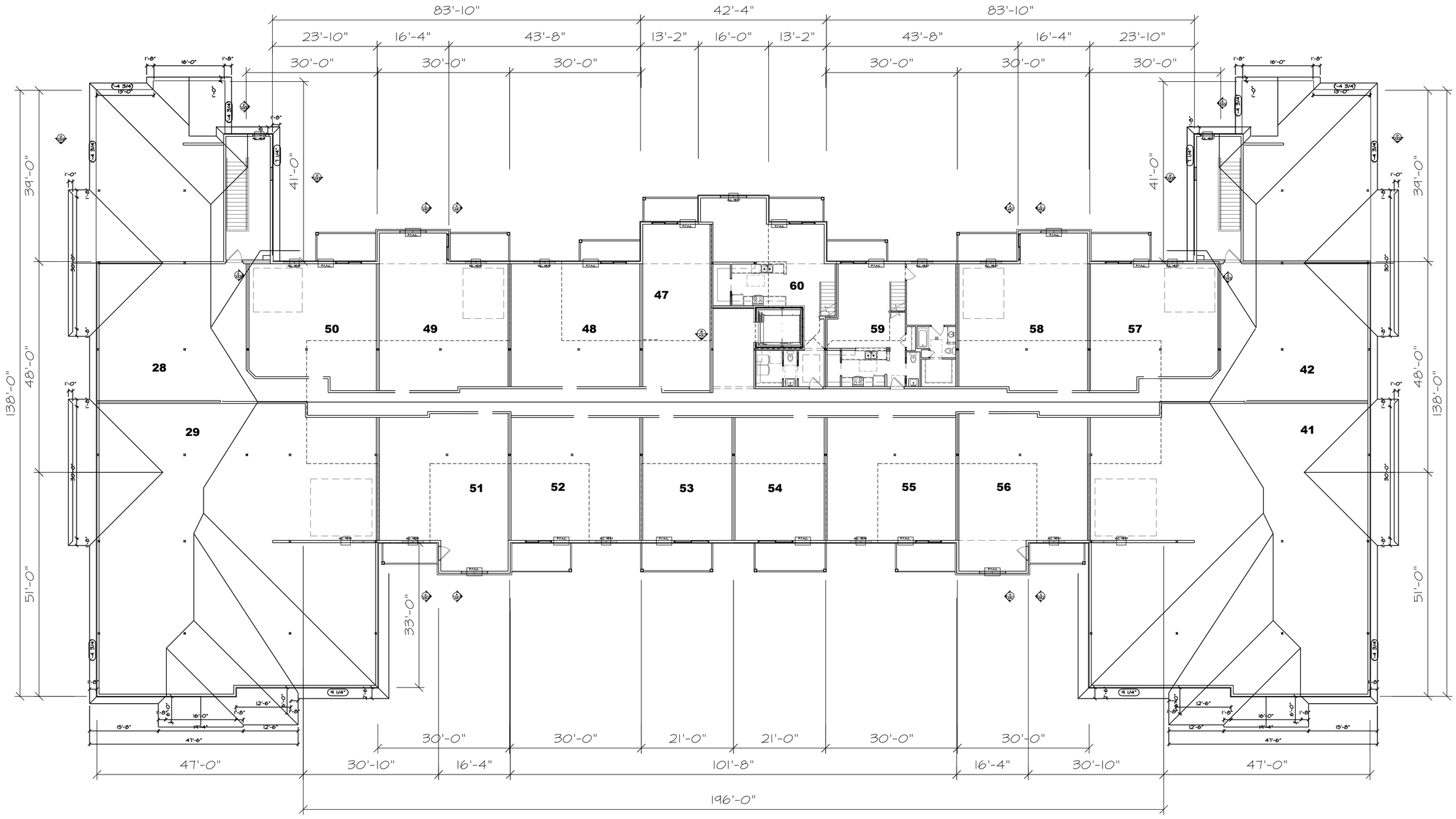

LOWER ROOF PLAN

SCALE: 3/32" = 1'-0"

LaPlant Architecture, LLC

laplantarchitecture@yahoo.com

OFFICE:926 WILLARD DRIVE
GREEN BAY, WISCONSIN
MAILING: 1592 RUSTIC WAY
GREEN BAY, WISCONSIN 54313
Telephone: (920) 737-9769
EMAIL:

© LaPlant Architecture LLC 2015

REVISION	DATE
X	XX

DATE
3/15/2016

PROJECT NO.
461462

SHEET
A
2.5.1

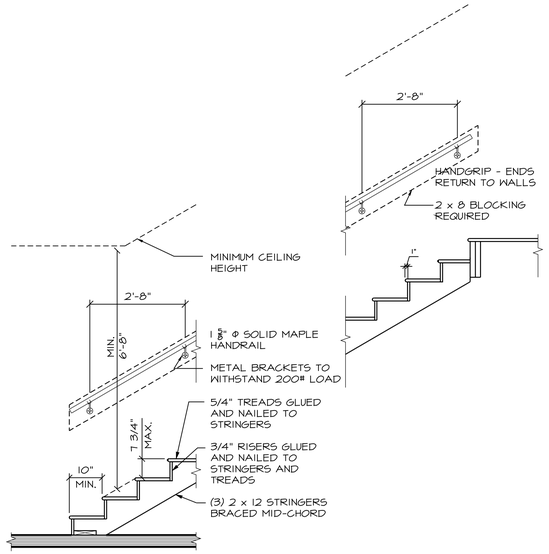

DWELLING UNIT STAIR TYPICAL DETAIL (2 / A3.2)

SCALE: 1/2" = 1'-0"

GENERAL NOTES–STAIRS WITHIN DWELLING UNITS:

1. HEADROOM - EVERY STAIR SHALL HAVE A MINIMUM HEADROOM CLEARANCE OF 6 FEET 8 INCHES. THE MINIMUM CLEARANCE SHALL BE MEASURED VERTICALLY FROM A LINE PARALLEL TO THE NOSING OF THE TREADS TO THE CEILING OR SOFFIT DIRECTLY ABOVE THAT LINE.
2. TREADS AND RISERS - RISERS MAY NOT EXCEED 7.75" IN HEIGHT, TREADS SHALL BE AT LEAST 10" IN DEPTH. A NOSING OF 1" SHALL BE PROVIDED ON STAIRWAYS WITH SOLID RISERS WHERE THE TREAD DEPTH IS LESS THAN 11". THERE SHALL BE NO VARIATION IN UNIFORMITY EXCEEDING 3/8" IN THE DEPTH OF TREADS OR HEIGHT OF RISERS. DIMENSIONS SHOULD BE MEASURED PRIOR TO FINISH MATERIALS.
3. HANDRAILS AND HALF WALLS - A HANDRAIL SHALL BE PLACED ON EITHER SIDE OF STAIR AT 34" TO 38" ABOVE THE NOSING OF THE TREAD. HALF WALLS OR GUARD WALLS TO BE MINIMUM 42" ABOVE TREAD AND SAME LOADING REQUIREMENTS.
4. HAND GRIP DIMENSIONS - THE HAND GRIP PORTION OF A HANDRAIL MAY NOT BE LESS THAN 1 1/4 INCHES NOR MORE THAN 2 INCHES IN ANY HORIZONTAL CROSS-SECTIONAL DIMENSION. IF HAND RAIL IS NOT CIRCULAR, THE PERIMETER SHALL BE AT LEAST 4" AND NOT GREATER THAN 6 1/4" WITH A MAX. CROSS-SECTIONAL DIMENSION OF 2 1/4". ALL EDGES TO HAVE A 1/8" RADIUS.
5. WALL CLEARANCE - THE CLEARANCE BETWEEN A HANDRAIL AND A WALL SURFACE SHALL BE AT LEAST 1 1/2 INCHES.
6. LOADING - HANDRAILS SHALL BE DESIGNED AND CONSTRUCTED TO WITHSTAND A 200-POUND LOAD APPLIED IN ANY DIRECTION, AT ANY POINT OR 50 POUNDS PER LINEAL FOOT.
7. TYPICAL STAIR CONSTRUCTION - (3) 2 x 12 #2 D.F. STRINGERS BRACED MID-SPAN, 1 x 8 RISERS, AND 5/4 (NOMINAL) BULL NOSE TREADS.

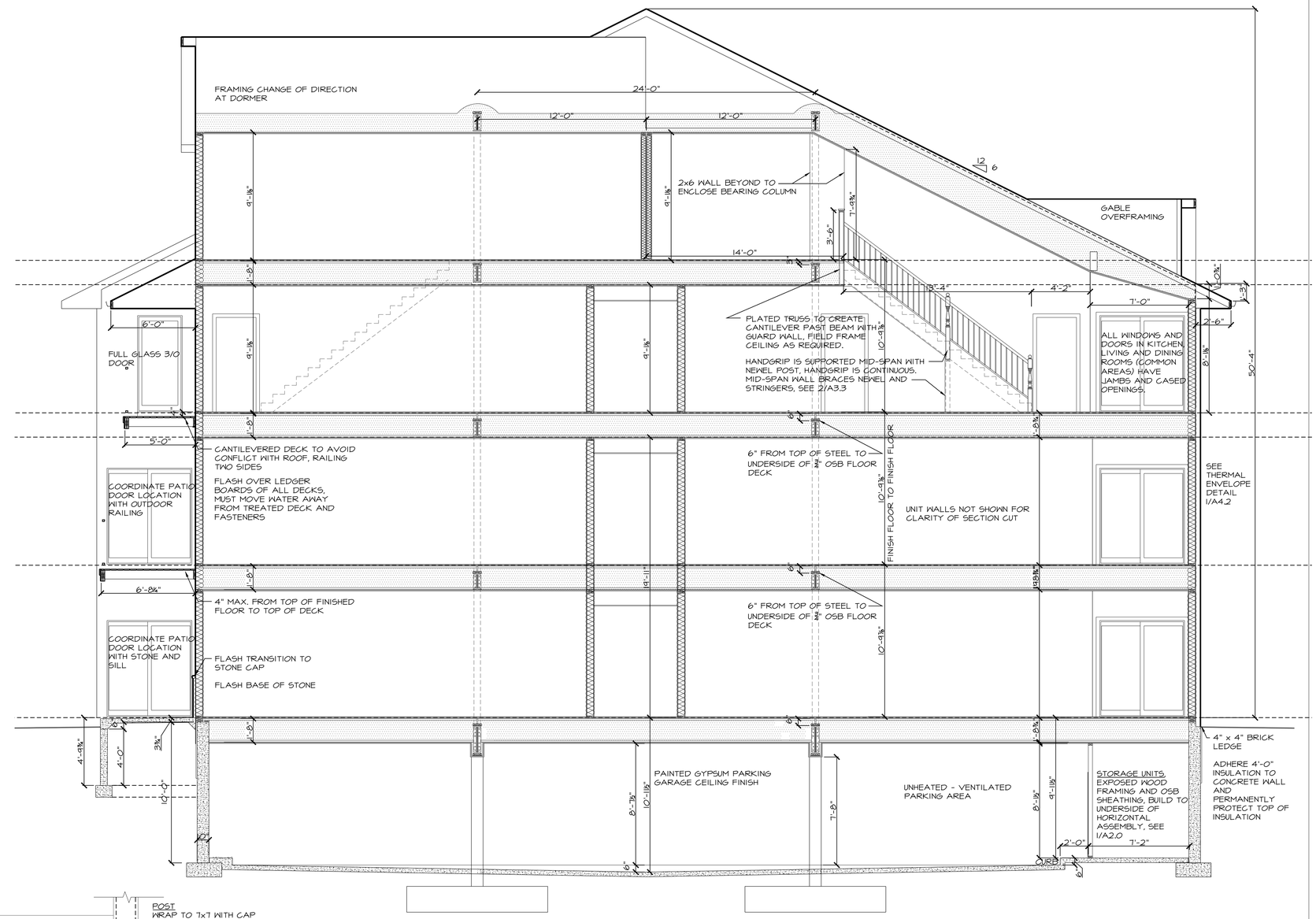

BUILDING SECTION (C / A3.2)

SCALE: 1/4" = 1'-0"

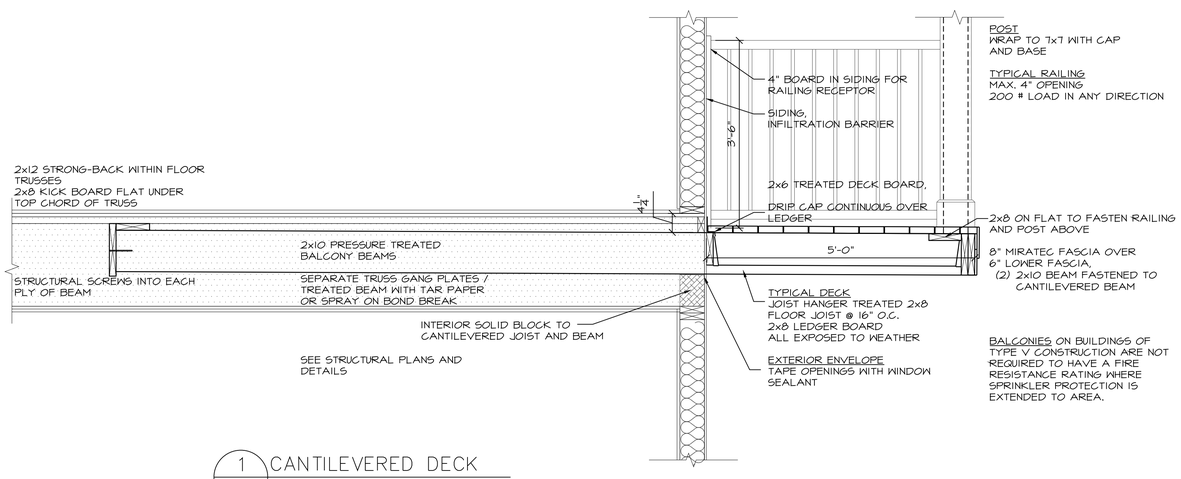

BALCONIES ON BUILDINGS OF TYPE V CONSTRUCTION ARE NOT REQUIRED TO HAVE A FIRE RESISTANCE RATING WHERE SPRINKLER PROTECTION IS EXTENDED TO AREA.

1 / A3.2 CANTILEVERED DECK

SCALE: 3/4" = 1'-0"

LaPlant Architecture, LLC
laplantarchitecture@yahoo.com
OFFICE:926 WILLARD DRIVE
GREEN BAY, WISCONSIN
MAILING: 1592 RUSTIC WAY
GREEN BAY, WISCONSIN 54313
Telephone: (920) 737-9769
EMAIL:

© LaPlant Architecture LLC 2015

REVISION	DATE
X	XX

DATE 3/15/2016

PROJECT NO. 461462

SHEET A 3.2

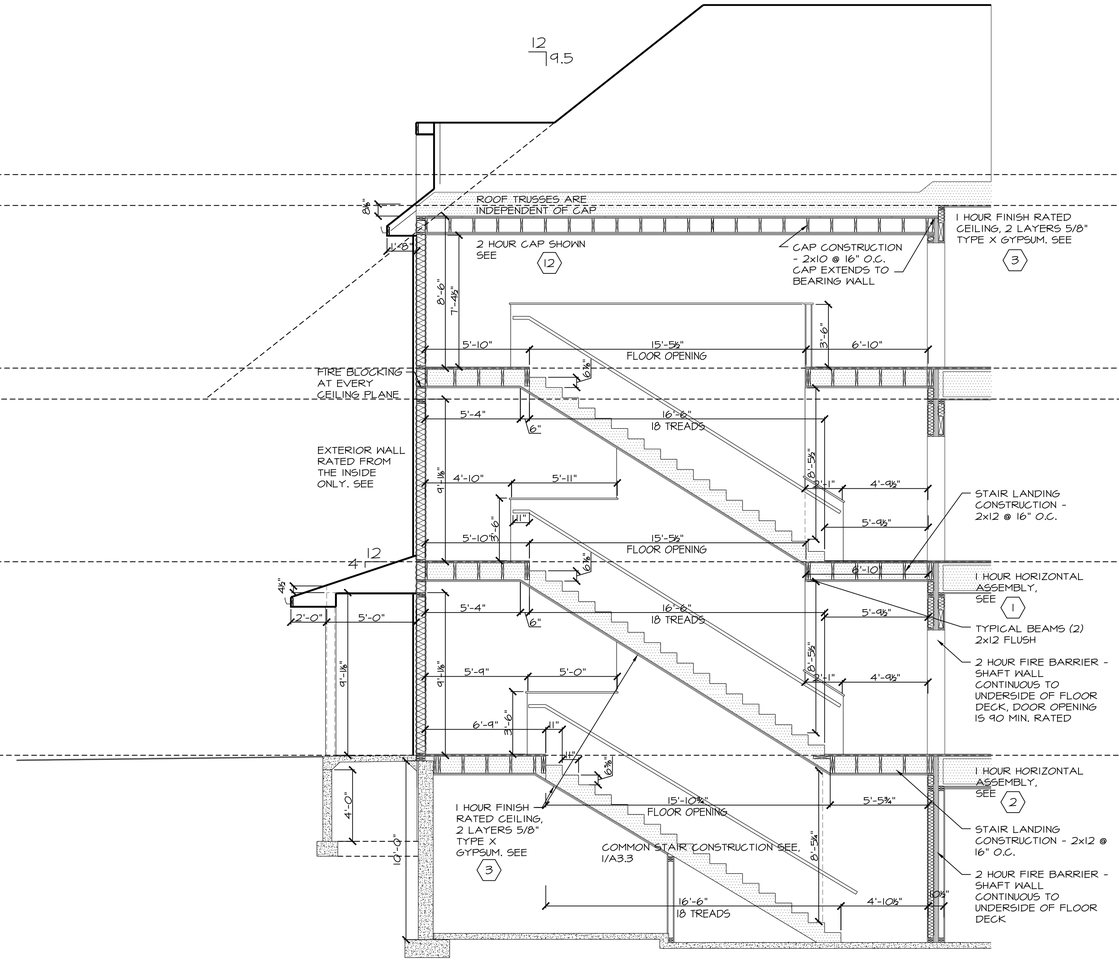

BUILDING SECTION E A3.3
SCALE: 1/4" = 1'-0"

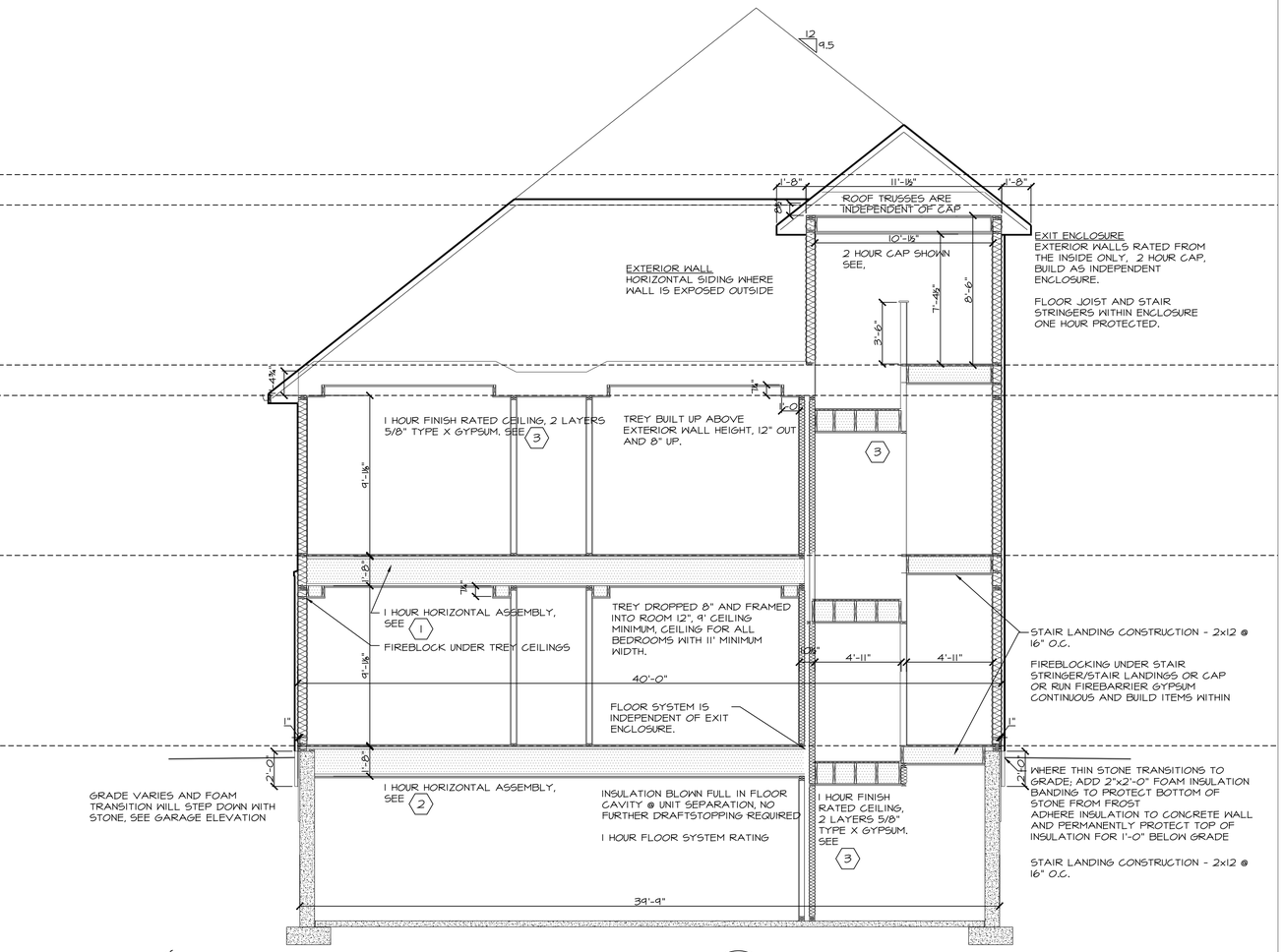

BUILDING SECTION D A3.3
SCALE: 1/4" = 1'-0"

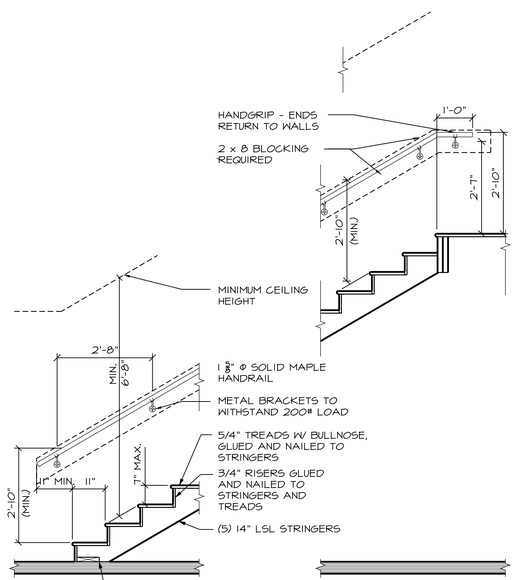

COMMON STAIR TYPICAL DETAIL 1 A3.3
SCALE: 1/2" = 1'-0"

GENERAL NOTES – COMMON STAIRS:

1. HEADROOM - EVERY STAIR SHALL HAVE A MINIMUM HEADROOM CLEARANCE OF 6 FEET 8 INCHES. THE MINIMUM CLEARANCE SHALL BE MEASURED VERTICALLY FROM A LINE PARALLEL TO THE NOSING OF THE TREADS TO THE CEILING OR SOFFIT DIRECTLY ABOVE THAT LINE.
2. TREADS AND RISERS - THERE SHALL BE NO VARIATION IN UNIFORMITY EXCEEDING 3/8" DIFFERENCE BETWEEN THE SMALLEST AND LARGEST RISE OR BETWEEN THE SMALLEST AND LARGEST TREAD. STEPS SHALL HAVE A RISE OF NOT MORE THAN 7 INCHES. STEPS SHALL NOT HAVE A TREAD LESS THAN 11 INCHES.
3. HANDRAIL DETAILS - THE TOP OF A HANDRAIL GRIPPING SURFACE SHALL BE MOUNTED BETWEEN 34 AND 38 INCHES ABOVE THE NOSING OF THE TREADS ON STAIRWAYS. HALF-WALLS IN NONDWELLING UNIT PORTIONS OF BUILDING SHALL EXTEND AT LEAST 42 INCHES ABOVE THE FINISHED FLOOR.
4. HAND GRIP DIMENSIONS - HANDRAILS ARE TO HAVE AN OUTSIDE DIAMETER OF 1 1/4 INCHES MINIMUM TO 2 INCHES. IF HAND RAIL IS NOT CIRCULAR, THE PERIMETER SHALL BE AT LEAST 4" AND NOT GREATER THAN 6 1/4" WITH A MAX. CROSS-SECTIONAL DIMENSION OF 2 1/4". ALL EDGES TO HAVE A 1/8" RADIUS.
5. WALL CLEARANCE - THE CLEARANCE BETWEEN A HANDRAIL AND A WALL SURFACE SHALL BE AT LEAST 1 1/2 INCHES.
6. LOADING - HANDRAILS SHALL BE DESIGNED AND CONSTRUCTED TO WITHSTAND A 200-POUND LOAD APPLIED IN ANY DIRECTION, AT ANY POINT OR TO RESIST 50 POUNDS PER LINEAR FOOT APPLIED TO THE TOP.
7. TYPICAL STAIR CONSTRUCTION - (4) 14" LSL STRINGERS, 1 x 8 RISERS, AND 5/4 BULL NOSE TREADS.
8. EXTENSIONS - HANDRAILS SHALL RETURN BACK TO THE WALL. RAILS ARE TO EXTEND HORIZONTALLY AT LEAST 12 INCHES BEYOND THE TOP RISER AND CONTINUE TO SLOPE FOR THE DEPTH OF ONE TREAD BEYOND THE BOTTOM RISER.

LaPlant Architecture, LLC
OFFICE:926 WILLARD DRIVE
GREEN BAY, WISCONSIN
MAILING: 1592 RUSTIC WAY
GREEN BAY, WISCONSIN 54313
Telephone: (920) 737-9769
EMAIL: laplantarchitecture@yahoo.com
© LaPlant Architecture LLC 2015

REVISION	DATE
X	XX

DATE 3/15/2016
PROJECT NO. 461462
SHEET A 3.3

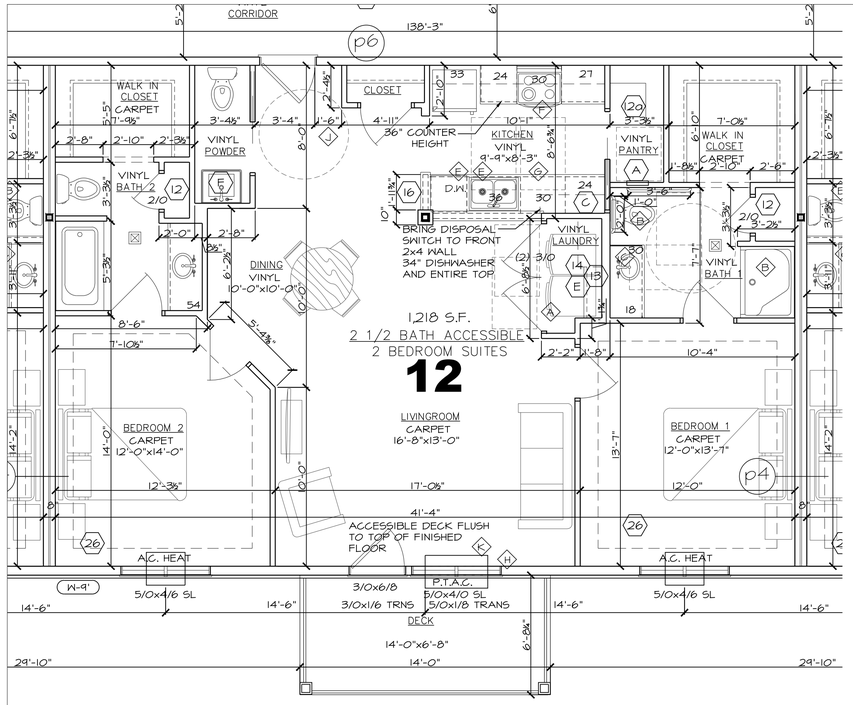

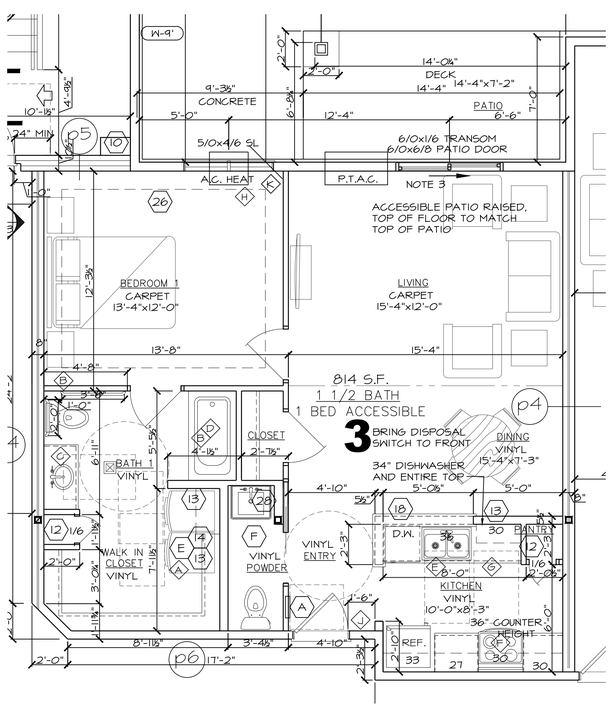

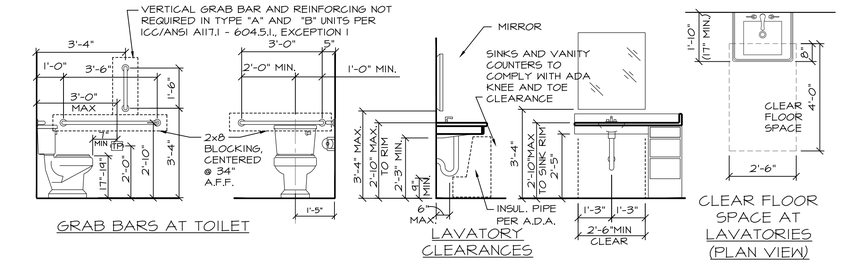

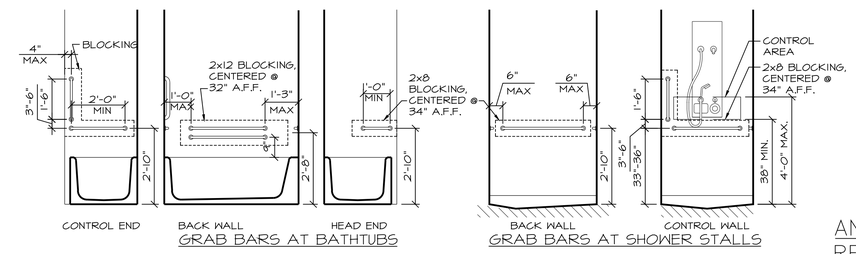

MOUNTING HEIGHTS

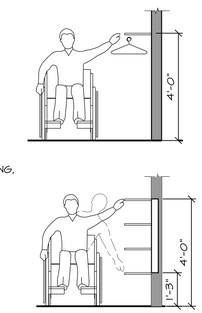

ANSI A117.1 REACH RANGES

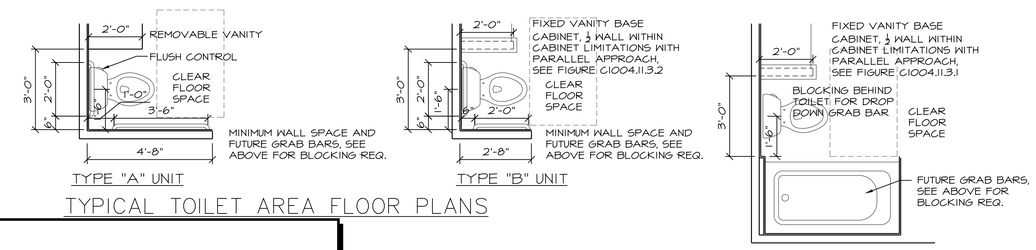

TYPICAL TOILET AREA FLOOR PLANS

R-2, TYPE "A" AND "B" UNIT NOTES:

GENERAL NOTES (SEE SHEET A3.1 FOR MOUNTING HEIGHTS)

TYPE "A" UNITS SHALL COMPLY WITH ICC/ANCI A117.1-2003; SECTION 1003
TYPE "B" UNITS SHALL COMPLY WITH ICC/ANCI A117.1-2003; SECTION 1004

1. ICC/IBC-2009; Sec 1107.6.2.1.1 - (APARTMENT HOUSES) TYPE "A" UNITS IN GROUP R-2 OCCUPANCIES CONTAINING MORE THAN 20 DWELLING UNITS OR SLEEPING UNITS, AT LEAST TWO (2) PERCENT BUT NOT LESS THAN ONE OF THE UNITS SHALL BE A TYPE "A" UNIT. ALL UNITS ON A SITE SHALL BE CONSIDERED TO DETERMINE THE TOTAL NUMBER OF UNITS AND THE REQUIRED NUMBER OF TYPE "A" UNITS. ACCESSIBLE GARAGE COUNTS ARE BASED ON THE NUMBER OF ACCESSIBLE UNITS.

2. ICC/IBC-2009; Sec 1107.7.1.1- TYPE "B" UNITS - AT LEAST ONE STORY SHALL BE PROVIDED WITH AN ACCESSIBLE ENTRANCE AND ALL UNITS SHALL BE TYPE "B" UNITS. FIRST FLOOR IS ACCESSIBLE AND ALL DOORS WITH LOW PROFILE THRESHOLD.

3. ICC/ANSI A117.1-2003; Sec. 1003.5.1- PRIMARY ENTRANCE AND PASSAGE DOORS AND DOORWAYS SHALL HAVE A 32" MIN. CLEAR WIDTH MEASURED FROM THE JAMB TO THE FACE OF THE OPEN DOOR, WITH THE DOOR OPEN 90°, AND ADA COMPLIANT THRESHOLDS. TYPE "A" UNITS SHALL ALSO HAVE ADA COMPLIANT LEVER HARDWARE, OPENING FORCE, BOTTOM DOOR SURFACE, VISION LITE AND MANEUVERING CLEARANCES. TYPE "B"- MANEUVERING CLEARANCES ARE ONLY REQUIRED ON THE OUTSIDE (CORRIDOR SIDE) OF THE PRIMARY ENTRANCE.
   EXCEPTION- IN BOTH "A" AND "B" UNITS - EXTERIOR SLIDING PATIO DOORS ARE TO HAVE A CLEAR OPENING OF 34" NOMINALLY. A 3/4" MAX. THRESHOLD IS ALLOWED PROVIDED THEY ARE BEVELED WITH A SLOPE NOT GREATER THAN 1:2.

   ICC/ANSI A117.1-2003; Sec. 404- TYPE "A" UNITS - DOOR HARDWARE, HANDLES, PULLS, LATCHES, LOCKS, AND OTHER OPERABLE PARTS SHALL HAVE A SHAPE THAT IS EASY TO GRASP WITH ONE HAND AND SHALL NOT REQUIRE TIGHT GRASPING, PINCHING, OR TWISTING OF THE WRIST. THE FORCE REQUIRED TO ACTIVATE SHALL BE 5.0 LB MAXIMUM. OPERABLE PARTS OF SUCH HARDWARE SHALL BE 34" A.F.F., MIN. AND 48" A.F.F, MAX.

   62.1101 PROVIDE LEVER DOOR HANDLES OR SINGLE LEVER CONTROLS FOR PLUMBING FIXTURES AT REQUEST OF TENANT.

4. ICC/ANSI A117.1-2003; Sec. 1003.9 & 1004.9- OPERABLE PARTS, SUCH AS FAUCETS, BATHTUB & SHOWER CONTROLS, WATER CLOSET FLUSH CONTROLS, LIGHT SWITCHES, ELECTRICAL RECEPTACLES, CIRCUIT BREAKERS, AND OTHER CONTROLS SHALL COMPLY WITH SEC. 309, HAVE A 30"x48" CLEAR FLOOR SPACE AND BE 15" A.F.F, MIN. / 48" A.F.F, MAX. OPERABLE PARTS SHALL BE OPERABLE WITH ONE HAND AND SHALL NOT REQUIRE TIGHT GRASPING, PINCHING, OR TWISTING OF THE WRIST. THE FORCE REQUIRED TO ACTIVATE SHALL BE 5.0 LB MAXIMUM. APPLIANCE CONTROLS AND CIRCUIT BREAKERS IN TYPE "A" UNITS SHALL ALSO COMPLY.

5. ICC/ANSI A117.1-2003; Sec 1003.11 AND 1004.11- WATER CLOSETS SHALL COMPLY INCLUDING CLEAR FLOOR SPACE, HEIGHT OF WATER CLOSET (15"-19" A.F.F - MEASURED TO TOP OF SEAT) AND OPERABLE CONTROLS. FLUSH CONTROL ON THE OPEN SIDE OF THE TOILET FOR TYPE A UNIT.

6. ICC/ANSI A117.1-2003; Sec 1003.11.9 - SHOWERS, IF IN TYPE "A" UNIT- ACCESSIBLE BATHROOMS OR IS THE ONLY BATHING FACILITY IN THE DWELLING UNIT, SHALL COMPLY WITH SECTION 608, INCLUDING CLEAR FLOOR SPACE AND CONTROLS, . EXCEPTION 3- SEATS AND GRAB BARS ARE NOT REQUIRED IF REINFORCEMENT FOR THE SEAT AND GRAB BARS IS PROVIDED.

7. ICC/ANSI A117.1-2003; SEC. 1003.12.6 & 1004.12.2; EACH APPLIANCE SHALL HAVE A 30"x48" CLEAR FLOOR SPACE POSITIONED FOR PARALLEL OR FORWARD APPROACH. CLEAR FLOOR SPACES ARE PERMITTED TO OVERLAP.

PLAN NOTES

(A) ICC/ANCI A117.1-2003; Sec. 1002.10, Sec. 1003.1 AND Sec. 1004.1 WASHING MACHINES AND CLOTHES DRYERS SHALL COMPLY WITH Sec. 611. 30" x 48" CLEAR FLOOR SPACE, POSITIONED FOR A PARALLEL APPROACH, SHALL BE PROVIDED. THE CLEAR FLOOR SPACE SHALL BE CENTERED ON THE APPLIANCE. TYPE "A" UNITS- IF W/D IS IN A ROOM, A 60" DIA. OR T-SHAPED TURNING SPACE IS REQUIRE. IF IN A CLOSET, THE 30"x48" CLEAR SPACE CAN BE LOCATED 10 IN. FROM THE FACE OF THE APPLIANCES AND MAY REQUIRE SLIDING DOORS OR NO DOORS.

(B) ICC/ANSI A117.1-2003; Sec 1003.11.4 AND Sec 1004.11.2 - REINFORCEMENT SHALL BE PROVIDED FOR THE FUTURE INSTALLATION OF GRAB BARS AND SHOWER SEATS AT WATER CLOSETS, BATHTUBS, AND SHOWER COMPARTMENTS. (TYPE "B" UNITS- REINFORCING FOR SHOWER SEAT IS NOT REQUIRED IF THE SHOWER IS LARGER THAN 36" x 36", REINFORCING FOR GRAB BARS IS STILL REQUIRED.)

(C) ICC/ANSI A117.1-2003; SEC 1003.11.5 & 1004.11.3.1.1- LAVATORIES SHALL COMPLY WITH SECTION 606. 34" MAX. HEIGHT TO SINK RIM, HAVE A 30" x 48" CLEAR FLOOR SPACE (TYPE "A"- FORWARD APPROACH, TYPE "B"- FORWARD OR PARALLEL APPROACH), TOE AND KNEE CLEARANCE, AND EXPOSED PIPES SHALL BE INSULATED.

   EXCEPTION: CABINETRY SHALL BE PERMITTED UNDER THE LAVATORY, PROVIDED:
   (A) THE CABINETRY SHALL BE REMOVED WITHOUT REMOVAL OR REPLACEMENT OF THE LAVATORY
   (B) THE FLOOR FINISH EXTENDS UNDER SUCH CABINETRY
   (C) THE WALLS BEHIND AND SURROUNDING CABINETRY ARE FINISHED

   ICC/ANSI A117.1-2003; SEC 1003.11.6 - MIRRORS ABOVE LAVATORIES SHALL HAVE A BOTTOM EDGE 40" MAX. A.F.F.

(D) ICC/ANSI A117.1-2003; Sec 1003.11.8 - BATHTUBS SHALL HAVE REINFORCING PER NOTE # 6 ABOVE, A CLEAR FLOOR SPACE- 30" x LENGTH OF TUB, CONTROLS THAT COMPLY WITH SEC. 309.4, A HAND SHOWER THAT COMPLIES WITH SEC. 607.6 AND BATHTUB ENCLOSURES, IF PROVIDED, SHALL COMPLY WITH SEC. 607.7.

(E) ICC/ANSI A117.1-2003; Sec 1003.12.4 - A 30" x 48" CLEAR SPACE SHALL BE PROVIDED AT THE KITCHEN SINK, CENTERED ON THE SINK (OR ONE SINK BOWL IN A MULTI-BOWL SINK) FOR A FRONT APPROACH IN TYPE "A" UNITS AND PARALLEL APPROACH IN TYPE "B" UNITS.
   EXCEPTION: CABINETRY SHALL BE PERMITTED TO BE ADDED UNDER THE SINK, PROVIDED:
   (A) THE CABINETRY CAN BE REMOVED WITHOUT REMOVAL OR REPLACEMENT OF THE SINK
   (B) THE FLOOR FINISH EXTENDS UNDER SUCH CABINETRY
   (C) THE WALLS BEHIND AND SURROUNDING CABINETRY ARE FINISHED.

   ICC/ANSI A117.1-2003; Sec 1003.12.4 - (UNIT TYPE "A") A KITCHEN SINK MAY NOT BE MORE THAN 34 INCHES ABOVE THE FLOOR AND TOE/KNEE CLEARANCE COMPLYING WITH SECTION 306 SHALL BE PROVIDED. THE SINK BOWL SHALL NOT BE MORE THAN 6 1/2 INCHES DEEP WITH FAUCETS COMPLYING WITH SECTION 309. EXPOSED PIPES MUST BE INSULATED.

(F) ICC/ANSI A117.1-2003; Sec 1003.12.6 - (UNIT TYPE "A") ALL APPLIANCES SHALL HAVE CONTROLS THAT COMPLY WITH Sec. 1003.9 AND BE WITHIN THE REACH RANGES AND SHALL HAVE A CLEAR FLOOR SPACE POSITIONED FOR A PARALLEL OR FORWARD APPROACH. DISHWASHER SHALL HAVE A CLEAR FLOOR SPACE ADJACENT TO THE DISHWASHER DOOR. REFRIGERATOR/FREEZER SHALL HAVE AL LEAST 50% OF THE FREEZER COMPARTMENT SHELVES, INCLUDING THE BOTTOM OF THE FREEZER 54" MAX. A.F.F.

(G) ICC/ANSI A117.1-2003; Sec 1002.12.3 - (UNIT TYPE "A") A KITCHEN 30" WIDE WORK SURFACE WITH KNEE CLEARANCE PER SECTION 306 FOR A FRONT APPROACH SHALL BE PROVIDED. THE COUNTER TO BE NO HIGHER THAN 34 INCHES ABOVE THE FLOOR.

   1003.12.3.1 - WORK AREA 30" x 48" CLEAR FLOOR SPACE -FORWARD APPROACH
   EXCEPTION: CABINETRY SHALL BE PERMITTED UNDER THE WORK SURFACE, PROVIDED:
   (A) THE CABINETRY CAN BE REMOVED WITHOUT REMOVAL OR REPLACEMENT OF THE WORK SURFACE
   (B) THE FLOOR FINISH EXTENDS UNDER SUCH CABINETRY
   (C) THE WALLS BEHIND AND SURROUNDING CABINETRY ARE FINISHED

(H) ICC/ANSI 117.1-2003; Sec. 1003.13 WINDOWS - (UNIT TYPE "A") WHERE OPERABLE WINDOWS ARE PROVIDED, AT LEAST ONE WINDOW IN EACH SLEEPING, LIVING, OR DINING SPACE SHALL HAVE OPERABLE PARTS COMPLYING WITH SEC. 309. EACH REQUIRED OPERABLE WINDOW SHALL HAVE OPERABLE PARTS COMPLYING WITH SEC. 309. SEE NOTE #3.

(J) CRITICAL ACCESSIBLE DIMENSION

(K) AIR CONDITIONERS WITHIN REACH RANGE OR TO HAVE REMOTE CONTROL.

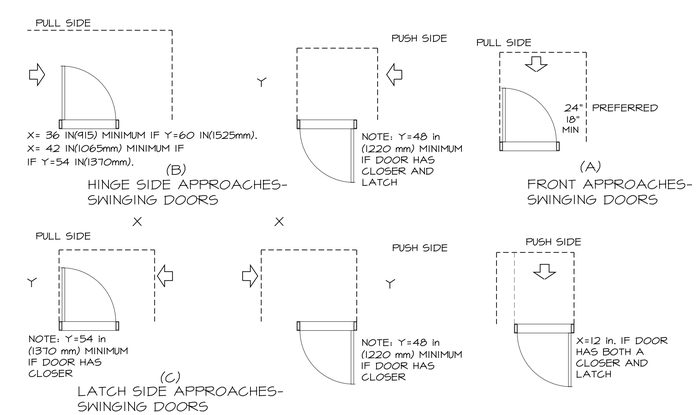

MANEUVERING CLEARANCES AT DOORS

NOT TO SCALE

LaPlant Architecture, LLC
OFFICE:926 WILLARD DRIVE
GREEN BAY, WISCONSIN
MAILING: 1592 RUSTIC WAY
GREEN BAY, WISCONSIN 54313
Telephone: (920) 737-9769
EMAIL: laplantarchitecture@yahoo.com

© LaPlant Architecture LLC 2015

REVISION	DATE
X	XX

DATE 3/15/2016

PROJECT NO. 461462

SHEET A 4.1

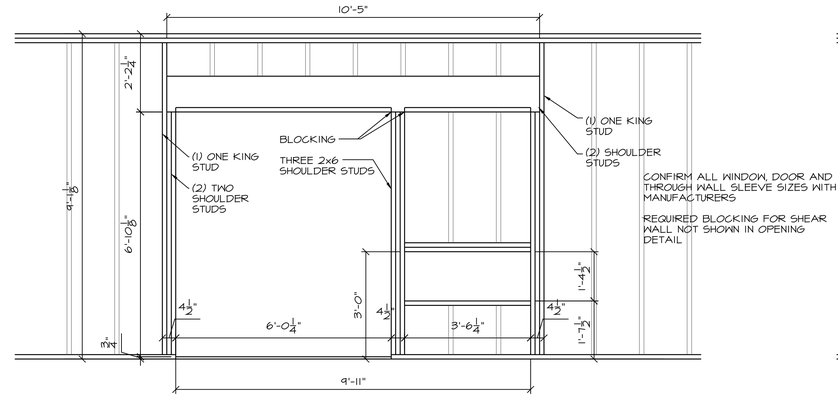

1 A4.3 CONTINUOUS HEADER–
PATIO DOOR AND P.T.A.C. UNIT
SCALE: 1/2" = 1'-0"

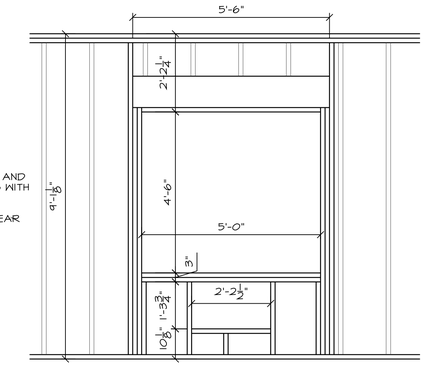

2 A4.3 HEADER–
WINDOW AND AIR CONDITIONER
SCALE: 1/2" = 1'-0"

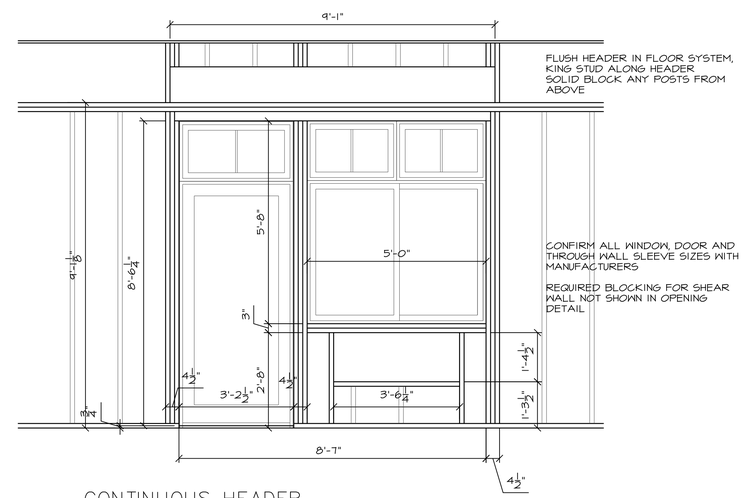

3 A4.3 CONTINUOUS HEADER–
SWING DOOR, P.T.A.C. UNIT, TRANSOM
SCALE: 1/2" = 1'-0"

LaPlant Architecture, LLC
laplantarchitecture@yahoo.com
OFFICE:926 WILLARD DRIVE
GREEN BAY, WISCONSIN
MAILING: 1592 RUSTIC WAY
GREEN BAY, WISCONSIN 54313
Telephone: (920) 737-9769
EMAIL:

© LaPlant Architecture LLC 2015

REVISION	DATE
X	XX

DATE
3/8/2016

PROJECT NO.
461482

SHEET
A
4.3

C. **PUBLIC HEARING AND CONSIDERATION OF AN AMENDMENT TO CONDITIONAL USE PERMIT #13-03 (4th Amendment)** for the request of Attorney J. Michael McTernan agent for VIDHYA Corp, VIII, Inc., the property owners, to remove condition #54 and allow the BP Amoco gasoline station and convenience store located at 10477 120th Avenue to remain open after June 10, 2016 subject to the terms and conditions of the said Conditional Use Permit and the Settlement Agreement between the Village and the property owners.

Recommendation: The Village staff recommends that if the Plan Commission determines that the petitioner has met the specific standards for the granting of a Conditional Use Permit, as specified above, then approval of the 4th Amendment to Conditional Use Permit #13-03 shall be approved subject to the comments and conditions of the May 23, 2016 Village Staff Report.

VILLAGE STAFF REPORT OF MAY 23, 2016

CONSIDERATION OF AN AMENDMENT TO CONDITIONAL USE PERMIT #13-03 (4th Amendment) for the request of Attorney J. Michael McTernan agent for VIDHYA Corp, VIII, Inc., the property owners, to remove condition #54 and allow the BP Amoco gasoline station and convenience store located at 10477 120th Avenue to remain open after June 10, 2016 subject to the terms and conditions of the said Conditional Use Permit and the Settlement Agreement between the Village and the property owners.

PUBLIC HEARING COMMENTS:

As a part of the hearing record, the Village staff has compiled a listing of findings, exhibits and conclusions regarding the petitioner's request as presented and described below:

FINDINGS OF FACT

1. The petitioner is requesting a 4th Amendment to Conditional Use Permit #13-03 to allow the BP Amoco gasoline and convenience store located at 10477 120th Avenue to remain open past June 10, 2016. (**Exhibit 1**)

2. The subject property is known as Lot 14 of CSM 1489 located in a part of U.S. Public Land Survey Section 30, Township 1 North, Range 22 East in the Village of Pleasant Prairie and further identified as Tax Parcel Number 92-4-122-302-0130.

3. The property is zoned B-4, PUD Freeway Service Business District with a Planned Unit Development Overlay and a gasoline station requires a Conditional Use Permit to operate in the B-4 District.

4. Previous Approvals:

    a. On November 19, 2012 the Plan Commission approved a Conditional Use Permit #12-10 (**Exhibit 2**) including site and operational plans to allow BP Amoco to operate a gasoline station and convenience store and to install a carbon treatment filtration system that treats existing contaminated ground water from several reported hazard substance releases at the BP site. This Conditional Use Permit approval was and still is subject to compliance with the Settlement Agreement approved by the Village Board on November 29, 2012 and the 53 additional conditions. The Conditional Use Permit was valid until May 1, 2013. (A full copy of the Settlement Agreement is on file with the Village).

    b. On May 28, 2013 the Plan Commission approved Conditional Use Permit #13-03 (**Exhibit 3**) to allow BP Amoco to operate a gasoline station and convenience store and to install a carbon treatment filtration system that will treat existing contaminated ground water from several reported hazard substance releases at the site. This approval was subject to compliance with the Settlement Agreement approved by the Village Board on November 29, 2012, the 1st Amendment to the Settlement Agreement approved by the Village Board on April 1, 2013 and the 53 additional conditions. The Conditional Use Permit was valid until June 10, 2014. (A full copy of the Settlement Agreement and 1st Amendment to the Settlement Agreement is on file with the Village).

    c. On January 13, 2014 the Plan Commission approved the 1st Amendment to Conditional Use Permit #13-03 (**Exhibit 4**) to allow BP Amoco to continue to operate the gasoline station and convenience store with the approval of Settlement Agreement Amendment #2 which addresses the request for modified analytical test parameters, discharge water standards and reporting

requirements of the carbon treatment filtration system that will treat existing contaminated ground water from several reported hazard substance releases at the site located at 10477 120th Avenue. This approval was subject to compliance with the Settlement Agreement approved by the Village Board on November 29, 2012, the 1st Amendment to the Settlement Agreement approved by the Village Board on April 1, 2013, the 2nd Amendment to the Settlement Agreement approved by the Village Board on February 3, 2014 and the 53 additional conditions. The Conditional Use Permit was valid until June 10, 2014. (A full copy of the Settlement Agreement and 1st and 2nd Amendments to the Settlement Agreement are on file with the Village).

d. On June 9, 2014 the Plan Commission approved the 2nd Amendment to Conditional Use Permit #13-03 (**Exhibit 5**) to allow BP Amoco to continue to operate the gasoline station and convenience store. This approval was subject to compliance with the Settlement Agreement approved by the Village Board on November 29, 2012, the 1st Amendment to the Settlement Agreement approved by the Village Board on April 1, 2013, the 2nd Amendment to the Settlement Agreement approved by the Village Board on February 3, 2014 and 53 additional conditions. The Conditional Use Permit (2nd Amendment) is valid until June 10, 2015. (A full copy of the Settlement Agreement and 1st and 2nd Amendments to the Settlement Agreement are on file with the Village).

e. On June 8, 2015 the Plan Commission approved the 3rd Amendment to Conditional Use Permit #13-03 (**Exhibit 6**) to allow BP Amoco to continue to operate the gasoline station and convenience store. This approval was subject to compliance with the Settlement Agreement and amendments thereto approved by the Village Board and 53 additional conditions. The Conditional Use Permit (3rd Amendment) is valid until June 10, 2016.

f. On June 15, 2015 the Village Board approved a 3rd Amendment to the Settlement Agreement and on May 2, 2016 the Village Board approved a 4th Amendment to the Settlement Agreement (A full copy of the Settlement Agreement and all Amendments to the Settlement Agreement are on file with the Village).

[Note: The findings of fact and the public hearing records of the above noted approvals are hereby included as part of this record and are available for viewing at the Village Hall].

5. ***Site Status***

Over the past several years, Vidhya and their consultants have taken actions in order to comply with the settlement agreement and aforementioned amendments to the Settlement Agreement and have made progress in addressing illicit discharges. The following broad scope items have been completed to date:

- During early 2012, the BP Amoco station located at 10477 120th Avenue was ordered to stop an ongoing illicit discharge of petroleum products into a drainage ditch adjacent to the property. Station owners were also ordered to develop and implement a plan to remove the contamination from the surrounding soils and groundwater. During September of 2012, station owners presented an acceptable plan to stop the illicit discharge, remediate the contamination, and monitor the surrounding soils and groundwater. The system has been operational since April of 2013.

- Due to the site remediation that has been completed to date and testing results, the owner's engineers have proposed to shut down the pumping and treatment system, while continuing to monitor the drainage ditch, sumps and select monitoring wells frequently for petroleum discharge. Both the Village and the Wisconsin Department of Natural Resources (WDNR) must approve the shutdown in order for it to take place.
- As noted above, on May 2, 2016, the Village Board approved the 4th Amendment which includes a plan for Vidhya Corporation to shut down a groundwater pumping and treatment system. An engineering and environmental firm has outlined a strategy to shut down the system, which has been operating within the limits of a Wisconsin Pollutant Discharge Elimination System (WPDES) permit for the past two (2) years.
- If during the course of one year, any petroleum product is observed in the ditch, sumps, or monitoring wells, steps shall be required immediately to be taken to remove the petroleum, the WDNR and the Village shall be notified, and the treatment system would be restarted. If, after one year (spring 2017), there is no increase in groundwater contamination and the ditch remains free of petroleum, the site could be reviewed for a closure request, with no further pumping, treatment or monitoring. Site closure is determined by a WDNR Closure Committee who reviews the case.
- Since Vidhya is currently in substantial compliance with the Settlement Agreement and related Amendments. That being said, due to Vidhya's recent request and Village Board's approval to shut down the groundwater pumping and treatment system, the Village Engineer recommends again 1 year extension of the CUP. Therefore, the Village planning staff is recommending approval of the 4th Amendment to Conditional Use Permit #13-03 for a one (1) year extension of the CUP subject to all of 53 conditions with condition #54 amended to read as follows:

    54. This Conditional Use Permit #13-03 4th Amendment is valid until June 14, 2016. In order for this facility to continue to operate after June 14, 2016, an application for an extension to this Conditional Use Permit shall be reconsidered by the Plan Commission at a regularly scheduled public hearing prior to June 14, 2017 (On or before the June 12, 2017 Plan Commission meeting).

6. The petitioner and all of the abutting and adjacent property owners within 300 feet were notified via U.S. Mail on May 5, 2016 of this hearing. Public hearing notices were also published in the Kenosha News on May 9 and 16, 2016.

7. The petitioner and the property owner were emailed a copy of this memorandum on May 20, 2016.

8. According to the Article XVIII of the Village Zoning Ordinance, the Plan Commission shall not approve a Conditional Use Permit unless they find after viewing the findings of fact, the application and related materials that the project as planned, will not violate the intent and purpose of all Village Ordinance and meets the minimum standards for granting of a Conditional Use Permit. Furthermore, the Plan Commission shall not approve any site and operational plan application without finding in the decision that the application, coupled with satisfaction of any conditions of approval, will comply with all applicable Village ordinance requirements and all other applicable federal, State or local requirements relating to

land use, buildings, development control, land division, environmental protection, sewer service, water service, noise, storm water management, streets and highways and fire protection.

Village Staff Conclusions and Recommendation: (to be read out loud)

The Village staff has determined that based upon the foregoing information presented in the application and related materials provided, adherence to the Settlement Agreement and amendments, the payment of outstanding invoices, and the comments received at public hearing, that the proposed use would meet the following standards for granting a Conditional Use Permit in that:

a. The project does not impede the traffic patterns on the site or cause traffic congestion or traffic circulation problems and the traffic patterns on the site do not hinder, harm or distract the provisions of public services;

b. The project does not impair an adequate supply of light and air to the adjacent properties;

c. The project does not increase danger of fire--in so far as the danger of fire does not exceed the capabilities of the Village Fire and Rescue Department;

d. The project does not create storm water flooding or drainage, create obnoxious odors, problems or otherwise endanger the public health, safety or welfare;

e. There is no existing identified hazard, danger, harm, noxiousness, offensiveness, nuisance or other adversity or inconsistency that would endanger the public's health, safety or welfare related to the proposed project; and

f. The proposed and applied for use on this particular parcel is not inherently inconsistent with the B-4, Freeway Service Business District in which it is located or the adjoining Zoning Districts and/or neighborhood.

Based on the foregoing information and the comments received during the public hearing, the Village staff recommends that if the Plan Commission determines that the petitioner has met the specific standards for the granting of a Conditional Use Permit, as specified above, then approval of the 4th Amendment to Conditional Use Permit #13-03 shall be approved subject to the following conditions:

1. There are no delinquent taxes or special assessments due on the property however, as of May 20, 2016 there are $4,575.98 in unpaid invoices. All invoices shall be paid prior to June 14, 2016.

2. Subject to compliance with exterior landscaping, signage and building maintenance items per the Zoning liquor license inspection.

3. Subject to compliance with Conditional Use Permit #13-03 as amended on January 13, 2014, June 9, 2014 and June 8, 2015 with the following change to condition #54:

    54. This Conditional Use Permit #13-03 4th Amendment is valid until June 14, 2017. In order for this facility to continue to operate after June 14, 2017, an application for an extension to this Conditional Use Permit shall be reconsidered by the Plan Commission at a regularly scheduled public hearing prior to June 14, 2017.

VILLAGE OF
PLEASANT PRAIRIE

Rev. 1/98
2/01
1/04

Filed _____ 20__ Published _____ 20__
Public Hearing _____ 20__ _____ 20__
Fee Paid _____ 20__ Approved _____ 20__
Notices Mailed _____ 20__ Denied: _____ 20__

RECEIVED
APR 4 - 2016
PLEASANT PRAIRIE

VILLAGE OF PLEASANT PRAIRIE
CONDITIONAL USE PERMIT

(Use this application only if a Site and Operational Plan approval is not required.)

To: Village Plan Commission and Village Board of Trustees of the Village of Pleasant Prairie:

I, (We), the undersigned owner(s)/agent do hereby petition the Village Plan Commission for a Conditional Use Permit as hereinafter requested.

It is petitioned that the following Conditional Use Permit be approved: VIDHYA Corp VIII, Inc. d/b/a BP Gas & Convenience Store

on the property located at: 10477 - 120th Avenue (address) and is legally described as follows

as follows: Part of the Northeast 1/4 of the Northwest 1/4 of Section 30 Township 1 North, Range 22 East, Lot 14 of Certified Survey No. 1489

Tax Parcel Number(s): 92-4-122-302-0130

The proposed use for this property is: BP Gas & Convenience Store

Current zoning of the property: PUD

Proposed zoning of the property: SAME

I (We), have contacted the Community Development Department to arrange a pre-application meeting to discuss the proposed request with the Village staff to determine additional information that may be needed to consider the request.

I, (We), hereby certify that all the above statements and attachments submitted herewith are true and correct to the best of my knowledge.

PROPERTY OWNER: VIDHYA Corp VIII, Inc

Print Name: Dixit Patel
Signature: Dixit Patel
Address: 1491 W. Roosevelt Rd
West Chicago (City) IL (State) 60185 (Zip)
Phone: 630.479.1529
Fax: 630.562.3349
Date April 1, 2016

OWNER'S AGENT:

Print Name: J. Michael McTernan
Signature: [illegible]
Address: 6633 Green Bay Road
Kenosha (City) WI (State) 53142 (Zip)
Phone: 262.654.8700
Fax: 262.654.8600
Date: April 1, 2016

SITE AND OPERATIONAL PLAN

BP Amoco Gas Station and Convenience Store located at 10477 – 120th Avenue is a self-service gasoline and diesel station, selling petroleum products to consumers of passenger vehicles and light trucks. It does not service or sell petroleum products to over-the-road trucks, cabs or other specialized commercial or construction vehicles. In addition, BP operates a convenience store that provides various grocery store and automobile supplies and accessories, along with a quick service restaurant, bakery, self-service coffee bar and soda fountain, and an e-commerce area for computerized assistance with weather and traffic information. The quick service restaurant provides seating for approximately 12 people and quick food selections of bakery items, sandwiches, soups and salads. The facility also provides separate men's and women's washrooms, and various other related convenience service amenities, including but not limited to, vacuum cleaners and compressed air for automobile maintenance, automated teller machine, along with the sale of alcohol and tobacco products as authorized by its license.

Due to several reported hazardous substance releases at the BP gas station dating back to 1993, the owner's consultants have developed and installed a carbon treatment system on the Property that has already successfully treated more than 250,000 gallons of contaminated ground water. This system has been installed in an enclosed and heated facility, located adjacent to the southern end of the existing gas station. This building addition was constructed in order to house the filters and pumps that are necessary to operate the operational carbon treatment system. Recently, the system was expanded to include the installation of a lead filters that were installed in order to clean the water of lead before it is discharged into the ditch. The building additional and all required improvements requested by the Village have been completed. The carbon treatment system is detailed in the Settlement Agreement entered into between the property owner and the Village, and the property owner has been obtained all applicable permits necessary for all of the applicable improvements noted herein.

In addition, the owner is in the process of completing supplemental site investigation in order to perform additional site remediation, including the hydro excavation of the ditch north of the site.

The expansion of the building measures approximately 375 square feet (25 feet 7 inches by 14 feet 7 inches) and closely "squares" the building foot print, leaving the southern emergency exit in place. The same exterior building materials (brick and trim) were used in order to match the expansion to the existing building.

The carbon treatment system will not create any disturbance to the surrounding property owners as it is housed in an enclosed and insulated expansion of the building. Even though more than 250,000 gallons of water have been treated to date, it is anticipated that the system will operate off and on for several years, dependent on the rise of ground water due to changes in the weather.

This system will not require any additional staff to manage and operate, as it will be automated and will only occasionally require the replacement of carbon filters that will be disposed of using sealed

drums provided and retrieved by qualified environmental disposal companies, along with the occasional replacement of the lead filtering bags.

Moreover, the system will not alter existing operations of the gasoline station and convenience store, as those operations will continue as normal.

As currently exists, BP is currently open for business between the hours of 6am through 11pm, seven days a week, but maintains expanded hours (up to 24 hours a day) during the various peak holiday seasons. During those expanded times, additional staff is maintained in order to service the increase in customers. Deliveries and shipments occur during those times that BP is open to the public. Currently, there are seven full time and three part time employees, but additional seasonal help is retained during those peak holiday seasons. Currently, there are only two shifts of employees, but a third shift is added when the hours are expanded. There are currently 21 parking spaces on the site due the expansion of the building, two parking spaces were removed, leaving a total of 21 parking spaces (one handicapped access parking space, and twenty conventional parking spaces).

It is anticipated that traffic volumes of 500 to 1,000 daily trips will continue, and no truck trips other than deliveries of goods to the BP. The main products being sold at the BP include, but are not limited to: gasoline and diesel fuels, related automobile supplies and parts, along with food and beverages, all of which are currently being sold at the BP, which will continue after the expansion. Aside from the installation of the carbon treatment system, all of the existing equipment will continue to be utilized in the operation of the BP (petroleum delivery systems, coolers, ovens, and related food preparation equipment).

Aside from the disposal of the carbon and lead filters, the BP only has normal household cleaners used in the maintenance of the business in order to clean the food preparation and service areas, floors and bathrooms. The only waste that is disposed of at the BP is spoiled food and drink products, grey water waste and sanitary waste from the bathrooms.

The owners have installed and maintained a fully functioning and operational security camera system and recently upgraded hold-up alarm system. This systems were upgraded, pursuant to terms and conditions approved by the Village. Technicians made those modifications to the system in order to comply with the current Village ordinances.

Moreover, the owners retain landscapers to regularly maintain, replace and upgrade the landscaping that surrounds the property, including the removal of all snow and ice from the parking lots, driveways and sidewalks. In addition, employees walk the property on a regular basis to pick up debris, empty garbage cans, restock self-service washer fluids and paper towels, and to monitor the entire property in order to maintain it in a first class condition.

The owner maintains all permits and licenses required to operate its business. Those permits and licenses allow for the sale of petroleum, alcohol, tobacco, food, and related items sold in its business, issued from the various government agencies.

Exhibit 2

DOCUMENT
1693391
RECORDED
At Kenosha County, Kenosha WI 53140
JoEllyn M. Storz, Register of Deeds
January 25, 2013 2:26 PM
$30.00
Pages 8

VILLAGE OF PLEASANT PRAIRIE
CONDITIONAL USE GRANT NO. 12-10

Before the Village of Pleasant Prairie Plan Commission, Kenosha County, Wisconsin, in regard to the property located at 10477 120th Avenue.

Return to:
Village of Pleasant Prairie
9915 39th Avenue
Pleasant Prairie, WI 53158

Tax Parcel Number:
92-4-122-302-0130 8

Legal Description: Lot 14 of CSM 1489 (Document #872365) located in the Northwest One Quarter of U.S. Land Survey Section 30, Township 1 North, Range 22 East in the Fourth Principal Meridian, lying and being in the Village of Pleasant Prairie, Kenosha County Wisconsin.

WHEREAS, the Zoning Code and Zoning District Map of the Village of Pleasant Prairie, pursuant to State Statute, provides that the premises may not be used of right for the purpose hereinafter described but that upon petition such use may be approved by the Village of Pleasant Prairie as a Conditional Use Grant in particular circumstances as defined by the standards in the Zoning Ordinance; and

WHEREAS, such petition having been made to allow BP Amoco to operate a gasoline station and convenience store and to install a carbon treatment system that will treat existing contaminated ground water from several reported hazard substance releases at the site and public hearing held thereon, and the Village Plan Commission having determined that by reason of the particular nature, character and circumstances of the proposed use, and of the specific and contemporary conditions, that the grant of such use upon the terms and conditions hereinafter prescribed would be consistent with the requirements of the Zoning Ordinance. Specifically, based upon the information presented at the public hearing, and in particular the memorandum from the Village Fire & Rescue Department, the project meets the following standards for granting a Conditional Use Permit in that the project/use:

- The project does not impede the traffic patterns on the site or cause traffic congestion or traffic circulation problems and the traffic patterns on the site do not hinder, harm or distract the provisions of public services.
- The project does not impair an adequate supply of light and air to the adjacent properties.
- The project does not increase danger of fire --in so far as the danger of fire does not exceed the capabilities of the Village Fire & Rescue Department.
- The project does not create storm water flooding or drainage, create obnoxious odors, problems or otherwise endanger the public health, safety or welfare.

- There are no existing identified hazard, danger, harm, noxiousness, offensiveness, nuisance or other adversity or inconsistency that would endanger the public's health, safety or welfare related to the proposed use.
- The proposed and applied for use on this particular parcel is not inherently inconsistent with the B-4, Freeway Service Business District in which it is located or the adjoining zoning districts and land uses.

NOW THEREFORE, a Conditional Use Permit is granted, subject to compliance with the terms and conditions hereinafter stated to allow BP Amoco to operate a gasoline station and convenience store and to install a carbon treatment system that will treat existing contaminated ground water from several reported hazard substance releases at the site.

1. Compliance with PUD Ordinance #12-40, including the Digital Security Imaging System Agreement on file with the Village.
2. Compliance with the terms and conditions of the executed Settlement Agreement approved by the Village Board on November 19, 2012 on file with the Village.
3. Compliance with the Site and Operational Plans as conditionally approved by the Village Plan Commission on November 19, 2012 on file with the Village.
4. Compliance with the Preliminary Site Investigation Work Plan dated November 14, 2012. The Remedial Action Plan and Remedial Design Report shall be compliant with NR 700 shall be submitted to the Village.
5. Compliance with the WI DNR WPDES Permit issued on November 2, 2012.
6. Compliance with the Wisconsin Department of Transportation Work in the Right-of-Way Permit dated November 26, 2012.
7. All hard surfaced areas including the parking lot areas, drive lanes, paved areas adjacent to the pumps, sidewalks, etc. shall be clean, neat and free from pot holes or other cracks which present a safety risk to the pedestrians or traveling public. The hard surface areas of the site shall be maintained and free of any debris or potholes which may cause distractions or damages to vehicles. All pavement markings shall be done in yellow or white reflective paint.
8. The gas station and convenience store shall operate in an organized, well-kept, clean, neat and professional manner. The inside of the store shall be maintained, painted, and clean for the public. Damaged or dirty walls, floors, coolers, bathrooms, racking, displays lighting, etc. shall be taken care of or repaired promptly. Malfunctioning gas pumps shall be repaired as soon as possible.
9. A Kenosha County Health Department permit and regular inspections will be conducted on the premises. Violations may result in the suspension or revocation of the Health Permit and the Conditional Use Permit.
10. The hours of operation (when the public is allowed to enter or remain on site for business purposes) shall be limited from 5:00 a.m. to 12:00 a.m. daily. A Temporary Use Permit may be issued for 24-hour operations during any holiday period. A Temporary Use Permit may be issued for 24-hour operations during any holiday period subject to approval of the Village Police Chief. In addition, a 24-hour holiday operation may require the owners to enter into an agreement and pay for the overtime services of the Police Department, as determined by the Police Chief. Pursuant to the Zoning Ordinance and liquor license requirements, the store is allowed to be open until midnight; however, Class A Beer is only allowed to be sold from 8:00 a.m. to midnight and Class A Intoxicated Liquor is only allowed to be sold from 8:00 am to 9:00 p.m.

11. Currently, deliveries and shipments occur during the time that BP is open to the public.

12. The delivery hours or any other activities outside the principal building that might cause a disturbance to neighboring areas (e.g., outside loading or unloading, the arrival of deliveries, idling of delivery trucks, beeping of backing vehicles, and garbage pickup), except for snow removal, is allowed only from 6:00 a.m. to 10:00 p.m.

13. BP Amoco Gas Station and Convenience Store located at 10477 120th Avenue is a self-service gasoline and diesel station, selling petroleum products to consumers of passenger vehicles and light trucks. It does not service or sell petroleum products to over-the-road trucks, cabs or other specialized commercial or construction vehicles. In addition, BP operates a convenience store under the brand name AM/PM that provides various grocery store and automobile supplies and accessories, along with a quick service restaurant, bakery, self-service coffee bar and soda fountain, and an e-commerce area for computerized assistance with weather and traffic information. The quick service restaurant provides seating for approximately 12 people and quick food selections of bakery items, sandwiches, soups and salads. The facility also provides separate men's and women's washrooms, and various other related convenience service amenities, including but not limited to, vacuum cleaners and compressed air for automobile maintenance, automated teller machine, along with the sale of alcohol and tobacco products as authorized by its license.

14. Due to several reported hazardous substance releases at the BP gas station dating back to 1993, the owner's consultants are developing and installing a carbon treatment system that will treat contaminated ground water. This system needs to be installed in an enclosed and heated facility. As a result, the southeast corner of the building is being expanded in order to house the filters and pumps that are necessary to operate the carbon treatment system. This system is detailed in a Settlement Agreement being entered into between the property owner and the Village, and the property owner will obtain all applicable permits before installing said system.

15. The expansion of the building will measure approximately 420 square feet (30 feet by 15 feet) and will simply "square" the building foot print. The same exterior building materials (brick and trim) will be used in order to match the expansion to the existing building.

16. No through penetration between the new carbon room addition and the existing building shall be allowed to ensure no transfer of potentially toxic chemicals such as but not limited to carbon monoxide.

17. The 420 square foot addition <u>shall not</u> be used for the storage of any materials including but not limited, cleaning supplies, extra toilet paper or other supplies, merchandize or other products.

18. The 420 square foot addition is subject to compliance with the following conditions from the Village Building Inspection Department:

    a. All building, plumbing, lighting and HVAC plans will need to be designed to the IBC Codes, prior to submitting (4 sets) for building permits from the Village of Pleasant Prairie. Since the total cubic footage of the accessory structure is less than 100,000 cubic ft. this can be a Municipal review. All sub-contractors will be required to apply for permits.

    b. Halls, corridors, stairways, passageways, work aisles and other means of egress from factories, offices and mercantile buildings shall have emergency lighting and exit lighting per Article 700 of the NEC, SPS 316.46 Which requires interior and exterior lighting. The existing plans only show interior lighting. The Village Fire &

Rescue Department shall be contacted for further information and requirements. Contact Fire & Rescue Chief Doug McElmury at 262-694-8027.

c. The architect(s)/ professional engineer(s) shall submit, to the Village and State, the compliance statement, Form SBD 9720, prior to the final inspection with the Village Building Inspection and Fire & Rescue Departments.

d. The electrical contractor will be required to be licensed by the Village of Pleasant Prairie. The electrical contractor shall obtain a permit from the Village prior to beginning work. All contractors must be licensed or registered with the State of Wisconsin.

e. All fire alarm installations require plan review and permit from the Village of Pleasant Prairie Fire & Rescue Department.

19. **Downspouts shall be tied into the on-site storm sewer system and shall not be discharged onto existing pavement.**

20. Landscaping on the site shall be installed, watered, weeded, trimmed and maintained is good condition at all times. Litter and debris shall be removed from the landscaping on a daily basis. Damaged, dying or dead plant material shall be removed and new plantings shall be installed on a regular basis. Mulch shall be raked in place on a regular basis and replaced yearly.

21. The carbon treatment system will not create any disturbance to the surrounding property owners as it will be housed in an enclosed and insulated expansion of the building. It is anticipated that the system will operate off and on for several years, dependent on the rise of ground water due to changes in the weather.

22. This system will not require any additional staff to manage and operate, as it will be automated and will only occasionally require the replacement of carbon filters that will be disposed of using sealed drums provided and retrieved by qualified environmental disposal companies. Moreover, the system will not alter existing operations of the gasoline station and convenience store, as those operations will continue as normal.

23. Currently, there are seven (7) full time and three (3) part time employees, but additional seasonal help is retained during peak holiday seasons. Currently, there are only two shifts of employees, but a third shift has been added when the hours are expanded during the Midnight Madness house Thanksgiving evening/Black Friday. There are currently 23 parking spaces on the site, but with the expansion of the building, two (2) parking spaces are being removed, leaving a total of 21 parking spaces (one handicapped access parking space, and 20 conventional parking spaces). The number of parking spaces excludes the cars that can be parked at the pumps.

24. Pursuant to the Village Zoning Ordinance the minimum parking requirements for a gasoline station with a convenience store is five (5) spaces per each 2,000 square feet of gross floor area plus 1 space for each employee on the largest shift plus the required handicapped accessible parking spaces pursuant to the state code. Therefore, a minimum of 13 spaces plus their required handicapped accessible parking spaces is required (5 spaces plus 3 spaces plus 5 spaces (assuming no more than five workers on site).

25. It is anticipated that traffic volumes of 500 to 1,000 daily trips will continue, and there will be no truck trips other than deliveries of goods to the BP. The main products being sold at the BP include, but are not limited to: gasoline and diesel fuels, related automobile supplies and parts, along with food and beverages, all of which are currently being sold at the BP, which will continue after the expansion. Aside from the installation of the carbon treatment system, all of the existing equipment will continue to be utilized in the operation

of the BP (petroleum delivery systems, coolers, ovens, and related food preparation equipment).

26. Aside from the disposal of the carbon filters, the BP only has normal household cleaners used in the maintenance of the business in order to clean the food preparation and service areas, floors and bathrooms. The only waste that is disposed of at the BP is spoiled food and drink products, grey water waste and sanitary waste from the bathrooms.

27. In accordance with the DSIS Agreement, the security cameras shall be inaccessible to employees. Conspicuous signs shall be posted at the entrance stating that security cameras with an inaccessible recording devise is in place on the premises. Said system shall be maintained in working order at all times and the Village of Pleasant Prairie Police Department shall be promptly provided any requested video. The recording shall be kept in an archive for a minimum of two weeks and the Pleasant Prairie Police Department shall have remote access to the system to monitor and download video. Specifically, internet access shall be provided which would allow the Police Department to have "live time" monitoring of the BP store and site.

28. The parking lot shall be illuminated to provide sufficient lighting for the public's safety and for the security cameras to operate effectively per the Village's satisfaction.

29. A clear and unobstructed view of the cash registers and transaction areas shall be maintained from the internal 30-foot wide on-site circulation access roadway.

30. The building shall be equipped with and shall use an inaccessible drop safe.

31. Between 10:00-12:00 p.m. and 5:00-7:00 a.m. at least two (2) employees shall be working on-site unless the business has taken measures to protect a lone clerk such as the installation of bullet resistant glass or other equipment as approved by the Police Department, making the lone employee inaccessible.

32. Installation and full operation of a hold-up alarm, which is monitored by a UL listed central station with functioning telephone service, shall be used at the BP station building.

33. The cash register shall not be left unattended for periods of time when the convenience store is open to the public.

34. A height strip shall be located at each doorway entering and exiting the convenience store.

35. The owner shall retain landscapers to regularly maintain, replace and upgrade the landscaping that surrounds the property, including the removal of all snow and ice from the parking lots, driveways and sidewalks. In addition, employees walk the property on a regular basis to pick up debris, empty garbage cans, restock self-service washer fluids and paper towels, and to monitor the entire property in order to maintain it in a first class condition.

36. The owner shall obtain all permits and licenses required to operate its business. Those permits and licenses allow for the sale of petroleum, alcohol, tobacco, food, and related items sold in its business, issued from the various government agencies.

37. All signs shall comply with Article X of Chapter 420 of the Village Municipal Code and with the BP Amoco PUD Ordinance on file with the Village. All signs shall be in good working order, properly maintained or repaired as needed, painted and well-kept.

38. The following types of signs are prohibited and shall not be installed. For a complete listing of prohibited signs refer to the Article X of Chapter 420 of the Village Municipal Code.:

    a. Any sign with flashing or pulsating lights.

b. Any inflatable sign, including but not limited to tethered balloon signs or other gas-filled figures.

c. Any temporary, spring-action metal advertising sign used, for example, to advertise cigarette or gasoline prices.

d. Any spotlights used as visual attention-getters.

e. Strings of lights, tinsel, pennants, pinwheels or other similar devices hanging between two points or attached to light poles, cars, landscaping or structures on the property.

39. The Village has received numerous complaints relating to the operations of the station site including litter and garbage on the site; broken light standards and signs; inoperable pumps; pumps that don't issue receipts; dead landscaping; violation of security protocol; interior building damage to walls, floors , painting, counters; garbage overflowing; illegal outside storage of product; allowing products to be stored outside; allowing a pothole to remain in the drive area causing damage of cares etc. These ongoing complaints must be addressed on a daily basis by the owners as a responsible business owner in the Village. The Zoning staff will conduct inspections on a semi-annual basis to ensure compliance with these issues.

40. The use, operations, site, building and structures shall be designed, laid out, constructed and maintained in full compliance with the approved Site and Operational Plans, the Conditional Use Permit, Liquor and Tobacco Licenses and all other applicable provisions of the Village Municipal Code and all other applicable Village, County, State or federal regulations.

41. The use, operations, site, building and structures shall be conducted in such a way as to constitute a public or private nuisance or to violate any of the Performance Standards set out in Section 420-38 of the Village Zoning Ordinance.

42. The site, building and garbage dumpster structure shall be maintained in a clean, neat, presentable, aesthetically pleasing, odor–free, structurally sound and nonhazardous condition inside and outside of the store at all times. All litter and debris outside of the structures shall be promptly removed on a daily basis. The garbage dumpster enclosure doors shall not be left open on garbage day and shall be promptly closed and secured after the pick-up of garbage.

43. The handicapped parking spaces shall be appropriately signed, painted on the pavement and maintained pursuant to ADA requirements.

44. All exterior mechanical units, antennae and/or satellite dishes, whether roof-mounted or ground-mounted, shall be screened from the general public's view.

45. All required landscaping shall be installed per the plans and written verification and/or certification shall be provided to the Village by the landscape installer/designer that the landscaping has been installed in accordance with the Village approved landscape plan.

46. On site building alterations/modifications or changes in the operations or use of the site shall be in strict conformity to the Village approved plans and the Settlement Agreement approved in connection with the petition for this Conditional Use Permit. Violations of these conditions may result in the suspension or revocation of the conditional use permit and zoning violation prosecution, or both.

47. All uses shall conform to applicable Village Ordinance requirements, and to all other applicable local, County, State and Federal requirements relating to land use, buildings, development control, land division, environmental protection, sewer service, water service, storm water discharges and storm water management, noise, streets and highways and

fire protection; and in the event of conflicting requirements or standards, the most restrictive as determined by the Village shall apply.

48. All required permits shall be obtained from the Village prior to commencing work.

49. Operation of the uses granted herein shall be in strict conformity to the approved and documents filed and approved in connection with the petition for Site and Operational Plan approval. Any violation of these conditions may result in the revocation of the approval or zoning violation prosecution, or both.

50. No changes to the exterior site, building or structures shall be made without the Village's approval. No painting of the exterior masonry of the BP station building or garbage dumpster enclosure shall be permitted, unless expressly permitted by the Village. Colors for building trim work shall be approved by the Village.

51. Any addition, alteration, extension, expansion or other proposed change in the approved operation shall be subject to the Village's Conditional Use procedures as if such use were being established anew.

52. The Conditional Use Permit shall become effective upon the execution and recording of said document and shall constitute an effective covenant running with the land.

53. The Conditional Use Permit is subject to amendment and termination in accordance with the provisions of the Village General Zoning and Floodplain/Shoreland Zoning Ordinance.

54. **This Conditional Use Permit is valid until May 1, 2013. In order for this facility to continue to operate after May 1, 2013, this conditional use permit shall be reconsidered by the Plan Commission at a public hearing and amended prior to May 1, 2013.**

Granted by the action of the Village of Pleasant Prairie Plan Commission the 19th day of November 2012.

Thomas W. Terwall
Plan Commission Chairman

ATTEST:

Donald Hackbarth
Secretary

[Owners signature on following page]

OWNER: VIDHYA Corp, VIII, Inc.

Dixit Patel
President

ACKNOWLEDGMENT
STATE OF Wisconsin)
SS
Kenosha COUNTY)

This instrument was acknowledged before me in Pleasant Prairie (city) Wisconsin (state), on this 12th day of December, 2012 by Dixit Patel, President on behalf of VIDHYA Corp, VIII, Inc.

JEAN M. WERBIE-HARRIS NOTARY PUBLIC STATE OF WISCONSIN

Print Name: Jean M. Werbie-Harris
Notary Public, Kenosha County, WI
My Commission Expires: 1/5/2014

THIS INSTRUMENT WAS DRAFTED BY:
Jean M. Werbie-Harris
Community Development Director
Village of Pleasant Prairie
9915 39th Avenue
Pleasant Prairie, Wisconsin 53158

Exhibit 3

DOCUMENT
1709490
RECORDED
At Kenosha County, Kenosha WI 53140
JoEllyn M. Storz, Register of Deeds
August 14, 2013 10:09 AM
$30.00
Pages 8

VILLAGE OF PLEASANT PRAIRIE
CONDITIONAL USE GRANT NO. 13-03

Before the Village of Pleasant Prairie Plan Commission, Kenosha County, Wisconsin, in regard to the property located at 10477 120th Avenue.

Return to:
Village of Pleasant Prairie
9915 39th Avenue
Pleasant Prairie, WI 53158

Tax Parcel Number:
92-4-122-302-0130 8

Legal Description: Lot 14 of CSM 1489 (Document #872365) located in the Northwest One Quarter of U.S. Land Survey Section 30, Township 1 North, Range 22 East in the Fourth Principal Meridian, lying and being in the Village of Pleasant Prairie, Kenosha County Wisconsin.

WHEREAS, the Zoning Code and Zoning District Map of the Village of Pleasant Prairie, pursuant to State Statute, provides that the premises may not be used of right for the purpose hereinafter described but that upon petition such use may be approved by the Village of Pleasant Prairie as a Conditional Use Grant in particular circumstances as defined by the standards in the Zoning Ordinance; and

WHEREAS, such petition having been made to allow BP Amoco to operate a gasoline station and convenience store and to install a carbon treatment system that will treat existing contaminated ground water from several reported hazard substance releases at the site and public hearing held thereon, and the Village Plan Commission having determined that by reason of the particular nature, character and circumstances of the proposed use, and of the specific and contemporary conditions, that the grant of such use upon the terms and conditions hereinafter prescribed would be consistent with the requirements of the Zoning Ordinance. Specifically, based upon the information presented at the public hearing and the comments presented in this document that the project meets the following standards for granting a Conditional Use Permit in that the project/use:

- The project does not impede the traffic patterns on the site or cause traffic congestion or traffic circulation problems and the traffic patterns on the site do not hinder, harm or distract the provisions of public services.
- The project does not impair an adequate supply of light and air to the adjacent properties.
- The project does not increase danger of fire--in so far as the danger of fire does not exceed the capabilities of the Village Fire & Rescue Department.
- The project does not appear to create storm water flooding or drainage, create obnoxious odors, problems or otherwise endanger the public health, safety or welfare.

- There are no existing identified hazards, dangers, harm, noxiousness, offensiveness, nuisance or other adversity or inconsistency that would endanger the public's health, safety or welfare related to the proposed use. However, previous soil contaminations are being addressed as part of and as a condition of this Conditional Use Permit
- The proposed and applied for use on this particular parcel is not inherently inconsistent with the B-4, Freeway Service Business District in which it is located or the adjoining zoning districts and land uses.

NOW THEREFORE, a Conditional Use Permit is granted, subject to compliance with the terms and conditions hereinafter stated to allow BP Amoco to operate a gasoline station and convenience store and to install a carbon treatment system that will treat existing contaminated ground water from several reported hazard substance releases at the site.

1. Compliance with PUD Ordinance #12-40, including the Digital Security Imaging System Agreement on file with the Village.
2. Compliance with the terms and conditions of the executed Settlement Agreement approved by the Village Board on November 19, 2012 and amended on April 1, 2013 both on file with the Village.
3. Compliance with the Site and Operational Plans as conditionally approved by the Village Plan Commission on November 19, 2012 on file with the Village.
4. Compliance with the Preliminary Site Investigation Work Plan dated November 14, 2012. The Remedial Action Plan and Remedial Design Report shall be compliant with NR 700 shall be submitted to the Village.
5. Compliance with the WI DNR WPDES Permit issued on November 2, 2012.
6. Compliance with the Wisconsin Department of Transportation Work in the Right-of-Way Permit dated November 26, 2012.
7. Provide to the Village a copy of an ongoing agreement shall be executed by the Owner and an appropriate environmental firm to accomplish the following:
    - to monitor the operation and maintenance of the groundwater treatment system on a regular basis;
    - to continue influent and effluent sampling and analysis on the schedule prescribed in the stipulated agreement; and
    - to respond as needed to onsite emergencies related to the treatment system and alarms.
8. All hard surfaced areas including the parking lot areas, drive lanes, paved areas adjacent to the pumps, sidewalks, etc. shall be clean, neat and free from pot holes or other cracks which present a safety risk to the pedestrians or traveling public. The hard surface areas of the site shall be maintained and free of any debris or potholes which may cause distractions or damages to vehicles. All pavement markings shall be done in yellow or white reflective paint.
9. The gas station and convenience store shall operate in an organized, well-kept, clean, neat and professional manner. The inside of the store shall be maintained, painted, and clean for the public. Damaged or dirty walls, floors, coolers, bathrooms, racking, displays lighting, etc. shall be taken care of or repaired promptly. Malfunctioning gas pumps shall be repaired as soon as possible.
9. A Kenosha County Health Department permit and regular inspections will be conducted on the premises. Violations may result in the suspension or revocation of the Health Permit and the Conditional Use Permit.

10. The hours of operation (when the public is allowed to enter or remain on site for business purposes) shall be limited from 5:00 a.m. to 12:00 a.m. daily. A Temporary Use Permit may be issued for 24-hour operations during any holiday period subject to approval of the Village Police Chief. In addition, a 24-hour holiday operation will require the owners to enter into an agreement and pay for the overtime services of the Police Department, as determined by the Police Chief. Pursuant to the Zoning Ordinance and liquor license requirements, the store is allowed to be open until midnight; however, Class A Beer is only allowed to be sold from 8:00 a.m. to midnight and Class A Intoxicated Liquor is only allowed to be sold from 8:00 am to 9:00 p.m.

11. Currently, deliveries and shipments are allowed only during the time that BP is open to the public.

12. The delivery hours or any other activities outside the principal building that might cause a disturbance to neighboring areas (e.g., outside loading or unloading, the arrival of deliveries, idling of delivery trucks, beeping of backing vehicles, and garbage pickup), except for snow removal, is allowed only from 6:00 a.m. to 10:00 p.m.

13. BP Amoco Gas Station and Convenience Store located at 10477 120th Avenue is a self-service gasoline and diesel station, selling petroleum products to consumers of passenger vehicles and light trucks. It does not service or sell petroleum products to over-the-road trucks, cabs or other specialized commercial or construction vehicles. In addition, BP operates a convenience store that provides various grocery store and automobile supplies and accessories, along with a quick service restaurant, bakery, self-service coffee bar and soda fountain, and an e-commerce area for computerized assistance with weather and traffic information. The quick service restaurant provides seating for approximately 12 people and quick food selections of bakery items, sandwiches, soups and salads. The facility also provides separate men's and women's washrooms, and various other related convenience service amenities, including but not limited to, vacuum cleaners and compressed air for automobile maintenance, automated teller machine, along with the sale of alcohol and tobacco products as authorized by its license.

14. Due to several reported hazardous substance releases at the BP gas station dating back to 1993, the owner's consultants have developed and installed a carbon treatment system that treats contaminated ground water. This system needs to be installed in an enclosed and heated facility. As a result, the southeast corner of the building was expanded in order to house the filters and pumps that are necessary to operate the carbon treatment system. This system is detailed in a Settlement Agreement being entered into between the property owner and the Village, and the property owner obtained all applicable permits before installing said system.

15. The expansion of the building measures approximately 420 square feet (30 feet by 15 feet) and simply "square" the building foot print. The same exterior building materials (brick and trim) were used in order to match the expansion to the existing building.

16. No through penetration between the new carbon room addition and the existing building shall be allowed to ensure no transfer of potentially toxic chemicals such as but not limited to carbon monoxide.

17. The 420 square foot addition <u>shall not</u> be used for the storage of any materials including but not limited, cleaning supplies, extra toilet paper or other supplies, merchandize or other products.

18. The 420 square foot addition is subject to compliance with the following conditions from the Village Building Inspection Department:

    a. All building, plumbing, lighting and HVAC plans shall be designed to the IBC Codes, prior to submitting (4 sets) for building permits from the Village of Pleasant Prairie. Since the total cubic footage of the accessory structure is less than 100,000 cubic ft. this can be a Municipal review. All sub-contractors will be required to apply for permits.

    b. Halls, corridors, stairways, passageways, work aisles and other means of egress from factories, offices and mercantile buildings shall have emergency lighting and exit lighting per Article 700 of the NEC, SPS 316.46 Which requires interior and exterior lighting. The existing plans only show interior lighting. The Village Fire & Rescue Department shall be contacted for further information and requirements. Contact Fire & Rescue Chief Doug McElmury at 262-694-8027.

    c. The architect(s)/ professional engineer(s) shall submit, to the Village and State, the compliance statement, Form SBD 9720, prior to the final inspection with the Village Building Inspection and Fire & Rescue Departments.

    d. The electrical contractor shall to be licensed by the Village of Pleasant Prairie. The electrical contractor shall obtain a permit from the Village prior to beginning work. All contractors must be licensed or registered with the State of Wisconsin.

    e. All fire alarm installations require plan review and permit from the Village of Pleasant Prairie Fire & Rescue Department.

19. Downspouts shall be tied into the on-site storm sewer system and shall not be discharged onto existing pavement.

20. Landscaping on the site shall be installed, watered, weeded, trimmed and maintained is good condition at all times. Litter and debris shall be removed from the landscaping on a daily basis. Damaged, dying or dead plant material shall be removed and new plantings shall be installed on a regular basis. Mulch shall be raked in place on a regular basis and replaced yearly.

21. The carbon treatment system will not create any disturbance to the surrounding property owners as it will be housed in an enclosed and insulated expansion of the building. It is anticipated that the system will operate off and on for several years, dependent on the rise of ground water due to changes in the weather.

22. This system will not require any additional staff to manage and operate, as it will be automated and will only occasionally require the replacement of carbon filters that will be disposed of using sealed drums provided and retrieved by qualified environmental disposal companies. Moreover, the system will not alter existing operations of the gasoline station and convenience store, as those operations will continue as normal.

23. Currently, there are seven (7) full time and three (3) part time employees, but additional seasonal help is retained during peak holiday seasons. Currently, there are only two shifts of employees, but a third shift has been added when the hours are expanded during the Midnight Madness hours for Thanksgiving evening/Black Friday. There are currently 23 parking spaces on the site, but with the expansion of the building, two (2) parking spaces are being removed, leaving a total of 21 parking spaces (one handicapped access parking space, and 20 conventional parking spaces). The number of parking spaces excludes the cars that can be parked at the pumps.

24. Pursuant to the Village Zoning Ordinance the minimum parking requirements for a gasoline station with a convenience store is five (5) spaces per each 2,000 square feet of gross floor area plus 1 space for each employee on the largest shift plus the required handicapped accessible parking spaces pursuant to the state code. Therefore, a minimum of 13 spaces plus their required handicapped accessible parking spaces is required (5 spaces plus 3 spaces plus 5 spaces (assuming no more than five workers on site).

25. It is anticipated that traffic volumes of 500 to 1,000 daily trips will continue, and there will be no truck trips other than deliveries of goods to the BP. The main products being sold at the BP include, but are not limited to: gasoline and diesel fuels, related automobile supplies and parts, along with food and beverages, all of which are currently being sold at the BP, which will continue after the expansion. Aside from the installation of the carbon treatment system, all of the existing equipment will continue to be utilized in the operation of the BP (petroleum delivery systems, coolers, ovens, and related food preparation equipment).

26. Aside from the disposal of the carbon filters, the BP only has normal household cleaners used in the maintenance of the business in order to clean the food preparation and service areas, floors and bathrooms. The only waste that is disposed of at the BP is spoiled food and drink products, grey water waste and sanitary waste from the bathrooms.

27. In accordance with the DSIS Agreement, the security cameras shall be inaccessible to employees. Conspicuous signs shall be posted and maintained at the entrance stating that security cameras with an inaccessible recording devise is in place on the premises. Said system shall be maintained in working order at all times and the Village of Pleasant Prairie Police Department shall be promptly provided any requested video. The recording shall be kept in an archive for a minimum of two weeks and the Pleasant Prairie Police Department shall have remote access to the system to monitor and download video. Specifically, internet access shall be provided which would allow the Police Department to have "live time" monitoring of the BP store and site.

28. The parking lot shall be illuminated to provide sufficient lighting for the public's safety and for the security cameras to operate effectively per the Village's satisfaction.

29. A clear and unobstructed view of the cash registers and transaction areas shall be maintained from the internal 30-foot wide on-site circulation access roadway.

30. The building shall be equipped with and shall use an inaccessible drop safe.

31. Between 10:00-12:00 p.m. and 5:00-7:00 a.m. at least two (2) employees shall be working on-site unless the business has taken measures to protect a lone clerk such as the installation of bullet resistant glass or other equipment as approved by the Police Department, making the lone employee inaccessible.

32. Installation and full operation of a hold-up alarm, which is monitored by a UL listed central station with functioning telephone service, shall be used at the BP station building.

33. The cash register shall not be left unattended for periods of time when the convenience store is open to the public.

34. A height strip shall be located at each doorway entering and exiting the convenience store.

35. The owner shall retain landscapers to regularly maintain, replace and upgrade the landscaping that surrounds the property, including the removal of all snow and ice from the parking lots, driveways and sidewalks. In addition, employees shall walk the property on a regular basis to pick up debris, empty garbage cans, restock self-service washer fluids and paper towels, and to monitor the entire property in order to maintain it in a first class condition.

36. The owner shall obtain all permits and licenses required to operate its business. Those permits and licenses allow for the sale of petroleum, alcohol, tobacco, food, and related items sold in its business, issued from the various government agencies.

37. All signs shall comply with Article X of Chapter 420 of the Village Municipal Code and with the BP Amoco PUD Ordinance on file with the Village. All signs shall be in good working order, properly maintained or repaired as needed, painted and well-kept.

38. The following types of signs are prohibited and shall not be installed. For a complete listing of prohibited signs refer to the Article X of Chapter 420 of the Village Municipal Code.:

    a. Any sign with flashing or pulsating lights.

    b. Any inflatable sign, including but not limited to tethered balloon signs or other gas-filled figures.

    c. Any temporary, spring-action metal advertising sign used, for example, to advertise cigarette or gasoline prices.

    d. Any spotlights used as visual attention-getters.

    e. Strings of lights, tinsel, pennants, pinwheels or other similar devices hanging between two points or attached to light poles, cars, landscaping or structures on the property.

39. The Village had received numerous complaints relating to the operations of the station site including litter and garbage on the site; broken light standards and signs; inoperable pumps; pumps that don't issue receipts; dead landscaping; violation of security protocol; interior building damage to walls, floors , painting, counters; garbage overflowing; illegal outside storage of product; allowing products to be stored outside; allowing a pothole to remain in the drive area causing damage of cares etc. These ongoing complaints must be addressed on a daily basis by the owners as a responsible business owner in the Village. The Zoning staff will conduct inspections on a semi-annual basis to ensure compliance with these issues.

40. The use, operations, site, building and structures shall be designed, laid out, constructed and maintained in full compliance with the approved Site and Operational Plans, the Conditional Use Permit, Liquor and Tobacco Licenses and all other applicable provisions of the Village Municipal Code and all other applicable Village, County, State or federal regulations.

41. The use, operations, site, building and structures shall be conducted in such a way as to constitute a public or private nuisance or to violate any of the Performance Standards set out in Section 420-38 of the Village Zoning Ordinance.

42. The site, building and garbage dumpster structure shall be maintained in a clean, neat, presentable, aesthetically pleasing, odor–free, structurally sound and nonhazardous condition inside and outside of the store at all times. All litter and debris outside of the structures shall be promptly removed on a daily basis. The garbage dumpster enclosure doors shall not be left open on garbage day and shall be promptly closed and secured after the pick-up of garbage.

43. The handicapped accessible parking spaces shall be appropriately signed, painted on the pavement and maintained pursuant to ADA requirements.

44. All exterior mechanical units, antennae and/or satellite dishes, whether roof-mounted or ground-mounted, shall be screened from the general public's view.

45. All required landscaping shall be installed per the plans and written verification and/or certification shall be provided to the Village by the landscape installer/designer that the landscaping has been installed in accordance with the Village approved landscape plan.

46. On site building alterations/modifications or changes in the operations or use of the site shall be in strict conformity to the Village approved plans and the Settlement Agreement approved in connection with the petition for this Conditional Use Permit. Violations of these conditions may result in the suspension or revocation of the conditional use permit and zoning violation prosecution, or both.

47. All uses shall conform to applicable Village Ordinance requirements, and to all other applicable local, County, State and Federal requirements relating to land use, buildings, development control, land division, environmental protection, sewer service, water service, storm water discharges and storm water management, noise, streets and highways and fire protection; and in the event of conflicting requirements or standards, the most restrictive as determined by the Village shall apply.

48. All required permits shall be obtained from the Village prior to commencing work.

49. Operation of the uses granted herein shall be in strict conformity to the approved and documents filed and approved in connection with the petition for Site and Operational Plan approval. Any violation of these conditions may result in the revocation of the approval or zoning violation prosecution, or both.

50. No changes to the exterior site, building or structures shall be made without the Village's approval. No painting of the exterior masonry of the BP station building or garbage dumpster enclosure shall be permitted, unless expressly permitted by the Village. Colors for building trim work shall be approved by the Village.

51. Any addition, alteration, extension, expansion or other proposed change in the approved operation shall be subject to the Village's Conditional Use procedures as if such use were being established anew.

52. The Conditional Use Permit shall become effective upon the execution and recording of said document and shall constitute an effective covenant running with the land.

53. The Conditional Use Permit is subject to amendment and termination in accordance with the provisions of the Village General Zoning and Floodplain/Shoreland Zoning Ordinance.

54. **This Conditional Use Permit is valid until June 10, 2014. In order for this facility to continue to operate after June 10, 2014, an application for an extension to this conditional use permit shall be reconsidered by the Plan Commission at a regularly scheduled public hearing prior to June 10, 2014.**

Granted by the action of the Village of Pleasant Prairie Plan Commission the 28th day of May 2013.

Thomas W. Terwall
Plan Commission Chairman

ATTEST:

Donald Hackbarth
Secretary

[Owners signature on following page]

OWNER: VIDHYA Corp, VIII, Inc.

Dixit Patel
President

ACKNOWLEDGMENT
STATE OF WISCONSIN)
SS
KENOSHA COUNTY)

This instrument was acknowledged before me in City of Kenosha (city) State of Wisconsin (state), on this 22 day of July, 2013 by Dixit Patel, President on behalf of VIDHYA Corp, VIII, Inc.

Print Name: JMICHAEL MCTERNAN
Notary Public, KENOSHA County
My Commission ~~Expires:~~ Is Permanent

THIS INSTRUMENT WAS DRAFTED BY:
Jean M. Werbie-Harris
Community Development Director
Village of Pleasant Prairie
9915 39th Avenue
Pleasant Prairie, Wisconsin 53158

Exhibit 4

DOCUMENT
1728246
RECORDED
At Kenosha County, Kenosha WI 53140
JoEllyn K. Storz, Register of Deeds
June 12, 2014 2:45 PM
$30.00
Pages 8

VILLAGE OF PLEASANT PRAIRIE
CONDITIONAL USE GRANT NO. 13-03 Amended

Before the Village of Pleasant Prairie Plan Commission, Kenosha County, Wisconsin, in regard to the property located at 10477 120th Avenue.

Return to:
Village of Pleasant Prairie
9915 39th Avenue
Pleasant Prairie, WI 53158

Tax Parcel Number:
92-4-122-302-0130

Legal Description: Lot 14 of CSM 1489 (Document #872365) located in the Northwest One Quarter of U.S. Land Survey Section 30, Township 1 North, Range 22 East in the Fourth Principal Meridian, lying and being in the Village of Pleasant Prairie, Kenosha County Wisconsin.

WHEREAS, the Zoning Code and Zoning District Map of the Village of Pleasant Prairie, pursuant to State Statute, provides that the premises may not be used of right for the purpose hereinafter described but that upon petition such use may be approved by the Village of Pleasant Prairie as a Conditional Use Grant in particular circumstances as defined by the standards in the Zoning Ordinance; and

WHEREAS, such petition having been made to allow BP Amoco to operate a gasoline station and convenience store and to install a carbon treatment system that will treat existing contaminated ground water from several reported hazard substance releases at the site and public hearing held thereon, the Village Plan Commission has determined that by reason of the particular nature, character and circumstances of the proposed use, and of the specific and contemporary conditions, that the grant of such use upon the terms and conditions hereinafter prescribed would be consistent with the requirements of the Zoning Ordinance. Specifically, based upon the information presented at the public hearing and the comments presented in this document that the project meets the following standards for granting a Conditional Use Permit in that the project/use:

- The project does not impede the traffic patterns on the site or cause traffic congestion or traffic circulation problems and the traffic patterns on the site do not hinder, harm or distract the provisions of public services.
- The project does not impair an adequate supply of light and air to the adjacent properties.
- The project does not increase danger of fire--in so far as the danger of fire does not exceed the capabilities of the Village Fire & Rescue Department.
- The project does not appear to create storm water flooding or drainage, create obnoxious odors, problems or otherwise endanger the public health, safety or welfare.

- There are no existing identified hazards, dangers, harm, noxiousness, offensiveness, nuisance or other adversity or inconsistency that would endanger the public's health, safety or welfare related to the proposed use. However, previous soil contaminations are being addressed as part of and as a condition of this Conditional Use Permit
- The proposed and applied for use on this particular parcel is not inherently inconsistent with the B-4, Freeway Service Business District in which it is located or the adjoining zoning districts and land uses.

NOW THEREFORE, a Conditional Use Permit is granted, subject to compliance with the terms and conditions hereinafter stated to allow BP Amoco to operate a gasoline station and convenience store and to install a carbon treatment system that will treat existing contaminated ground water from several reported hazard substance releases at the site.

1. Compliance with PUD Ordinance #12-40, including the Digital Security Imaging System Agreement on file with the Village.
2. **Compliance with the terms and conditions of the executed Settlement Agreement approved by the Village Board on November 19, 2012, 1st Amendment to the Settlement Agreement approved on April 1, 2013 and 2nd Amendment to the Settlement Agreement approved on February 3, 2014 on file with the Village.**
3. Compliance with the Site and Operational Plans as conditionally approved by the Village Plan Commission on November 19, 2012 on file with the Village.
4. Compliance with the Preliminary Site Investigation Work Plan dated November 14, 2012. The Remedial Action Plan and Remedial Design Report shall be compliant with NR 700 shall be submitted to the Village.
5. Compliance with the WI DNR WPDES Permit issued on November 2, 2012.
6. Compliance with the Wisconsin Department of Transportation Work in the Right-of-Way Permit dated November 26, 2012.
7. Provide to the Village a copy of an ongoing agreement shall be executed by the Owner and an appropriate environmental firm to accomplish the following:
   - to monitor the operation and maintenance of the groundwater treatment system on a regular basis;
   - to continue influent and effluent sampling and analysis on the schedule prescribed in the stipulated agreement; and
   - to respond as needed to onsite emergencies related to the treatment system and alarms.
8. All hard surfaced areas including the parking lot areas, drive lanes, paved areas adjacent to the pumps, sidewalks, etc. shall be clean, neat and free from pot holes or other cracks which present a safety risk to the pedestrians or traveling public. The hard surface areas of the site shall be maintained and free of any debris or potholes which may cause distractions or damages to vehicles. All pavement markings shall be done in yellow or white reflective paint.
9. The gas station and convenience store shall operate in an organized, well-kept, clean, neat and professional manner. The inside of the store shall be maintained, painted, and clean for the public. Damaged or dirty walls, floors, coolers, bathrooms, racking, displays lighting, etc. shall be taken care of or repaired promptly. Malfunctioning gas pumps shall be repaired as soon as possible.

9. A Kenosha County Health Department permit and regular inspections will be conducted on the premises. Violations may result in the suspension or revocation of the Health Permit and the Conditional Use Permit.

10. The hours of operation (when the public is allowed to enter or remain on site for business purposes) shall be limited from 5:00 a.m. to 12:00 a.m. daily. A Temporary Use Permit may be issued for 24-hour operations during any holiday period subject to approval of the Village Police Chief. In addition, a 24-hour holiday operation will require the owners to enter into an agreement and pay for the overtime services of the Police Department, as determined by the Police Chief. Pursuant to the Zoning Ordinance and liquor license requirements, the store is allowed to be open until midnight; however, Class A Beer is only allowed to be sold from 8:00 a.m. to midnight and Class A Intoxicated Liquor is only allowed to be sold from 8:00 am to 9:00 p.m.

11. Currently, deliveries and shipments are allowed only during the time that BP is open to the public.

12. The delivery hours or any other activities outside the principal building that might cause a disturbance to neighboring areas (e.g., outside loading or unloading, the arrival of deliveries, idling of delivery trucks, beeping of backing vehicles, and garbage pickup), except for snow removal, is allowed only from 6:00 a.m. to 10:00 p.m.

13. BP Amoco Gas Station and Convenience Store located at 10477 120th Avenue is a self-service gasoline and diesel station, selling petroleum products to consumers of passenger vehicles and light trucks. It does not service or sell petroleum products to over-the-road trucks, cabs or other specialized commercial or construction vehicles. In addition, BP operates a convenience store that provides various grocery store and automobile supplies and accessories, along with a quick service restaurant, bakery, self-service coffee bar and soda fountain, and an e-commerce area for computerized assistance with weather and traffic information. The quick service restaurant provides seating for approximately 12 people and quick food selections of bakery items, sandwiches, soups and salads. The facility also provides separate men's and women's washrooms, and various other related convenience service amenities, including but not limited to, vacuum cleaners and compressed air for automobile maintenance, automated teller machine, along with the sale of alcohol and tobacco products as authorized by its license.

14. Due to several reported hazardous substance releases at the BP gas station dating back to 1993, the owner's consultants have developed and installed a carbon treatment system that treats contaminated ground water. This system needs to be installed in an enclosed and heated facility. As a result, the southeast corner of the building was expanded in order to house the filters and pumps that are necessary to operate the carbon treatment system. This system is detailed in a Settlement Agreement being entered into between the property owner and the Village, and the property owner obtained all applicable permits before installing said system.

15. The expansion of the building measures approximately 420 square feet (30 feet by 15 feet) and simply "square" the building foot print. The same exterior building materials (brick and trim) were used in order to match the expansion to the existing building.

16. No through penetration between the new carbon room addition and the existing building shall be allowed to ensure no transfer of potentially toxic chemicals such as but not limited to carbon monoxide.

17. The 420 square foot addition <u>shall not</u> be used for the storage of any materials including but not limited, cleaning supplies, extra toilet paper or other supplies, merchandize or other products.

18. The 420 square foot addition is subject to compliance with the following conditions from the Village Building Inspection Department:

    a. All building, plumbing, lighting and HVAC plans shall be designed to the IBC Codes, prior to submitting (4 sets) for building permits from the Village of Pleasant Prairie. Since the total cubic footage of the accessory structure is less than 100,000 cubic ft. this can be a Municipal review. All sub-contractors will be required to apply for permits.

    b. Halls, corridors, stairways, passageways, work aisles and other means of egress from factories, offices and mercantile buildings shall have emergency lighting and exit lighting per Article 700 of the NEC, SPS 316.46 Which requires interior and exterior lighting. The existing plans only show interior lighting. The Village Fire & Rescue Department shall be contacted for further information and requirements. Contact Fire & Rescue Chief Doug McElmury at 262-694-8027.

    c. The architect(s)/ professional engineer(s) shall submit, to the Village and State, the compliance statement, Form SBD 9720, prior to the final inspection with the Village Building Inspection and Fire & Rescue Departments.

    d. The electrical contractor shall to be licensed by the Village of Pleasant Prairie. The electrical contractor shall obtain a permit from the Village prior to beginning work. All contractors must be licensed or registered with the State of Wisconsin.

    e. All fire alarm installations require plan review and permit from the Village of Pleasant Prairie Fire & Rescue Department.

19. Downspouts shall be tied into the on-site storm sewer system and shall not be discharged onto existing pavement.

20. Landscaping on the site shall be installed, watered, weeded, trimmed and maintained is good condition at all times. Litter and debris shall be removed from the landscaping on a daily basis. Damaged, dying or dead plant material shall be removed and new plantings shall be installed on a regular basis. Mulch shall be raked in place on a regular basis and replaced yearly.

21. The carbon treatment system will not create any disturbance to the surrounding property owners as it will be housed in an enclosed and insulated expansion of the building. It is anticipated that the system will operate off and on for several years, dependent on the rise of ground water due to changes in the weather.

22. This system will not require any additional staff to manage and operate, as it will be automated and will only occasionally require the replacement of carbon filters that will be disposed of using sealed drums provided and retrieved by qualified environmental disposal companies. Moreover, the system will not alter existing operations of the gasoline station and convenience store, as those operations will continue as normal.

23. Currently, there are seven (7) full time and three (3) part time employees, but additional seasonal help is retained during peak holiday seasons. Currently, there are only two shifts of employees, but a third shift has been added when the hours are expanded during the Midnight Madness hours for Thanksgiving evening/Black Friday. There are currently 23 parking spaces on the site, but with the expansion of the building, two (2) parking spaces are being removed, leaving a total of 21 parking spaces (one handicapped access parking space, and 20 conventional parking spaces). The number of parking spaces excludes the cars that can be parked at the pumps.

24. Pursuant to the Village Zoning Ordinance the minimum parking requirements for a gasoline station with a convenience store is five (5) spaces per each 2,000 square feet of gross floor area plus 1 space for each employee on the largest shift plus the required handicapped accessible parking spaces pursuant to the state code. Therefore, a minimum of 13 spaces plus their required handicapped accessible parking spaces is required (5 spaces plus 3 spaces plus 5 spaces (assuming no more than five workers on site).

25. It is anticipated that traffic volumes of 500 to 1,000 daily trips will continue, and there will be no truck trips other than deliveries of goods to the BP. The main products being sold at the BP include, but are not limited to: gasoline and diesel fuels, related automobile supplies and parts, along with food and beverages, all of which are currently being sold at the BP, which will continue after the expansion. Aside from the installation of the carbon treatment system, all of the existing equipment will continue to be utilized in the operation of the BP (petroleum delivery systems, coolers, ovens, and related food preparation equipment).

26. Aside from the disposal of the carbon filters, the BP only has normal household cleaners used in the maintenance of the business in order to clean the food preparation and service areas, floors and bathrooms. The only waste that is disposed of at the BP is spoiled food and drink products, grey water waste and sanitary waste from the bathrooms.

27. In accordance with the DSIS Agreement, the security cameras shall be inaccessible to employees. Conspicuous signs shall be posted and maintained at the entrance stating that security cameras with an inaccessible recording devise is in place on the premises. Said system shall be maintained in working order at all times and the Village of Pleasant Prairie Police Department shall be promptly provided any requested video. The recording shall be kept in an archive for a minimum of two weeks and the Pleasant Prairie Police Department shall have remote access to the system to monitor and download video. Specifically, internet access shall be provided which would allow the Police Department to have "live time" monitoring of the BP store and site.

28. The parking lot shall be illuminated to provide sufficient lighting for the public's safety and for the security cameras to operate effectively per the Village's satisfaction.

29. A clear and unobstructed view of the cash registers and transaction areas shall be maintained from the internal 30-foot wide on-site circulation access roadway.

30. The building shall be equipped with and shall use an inaccessible drop safe.

31. Between 10:00-12:00 p.m. and 5:00-7:00 a.m. at least two (2) employees shall be working on-site unless the business has taken measures to protect a lone clerk such as the installation of bullet resistant glass or other equipment as approved by the Police Department, making the lone employee inaccessible.

32. Installation and full operation of a hold-up alarm, which is monitored by a UL listed central station with functioning telephone service, shall be used at the BP station building.

33. The cash register shall not be left unattended for periods of time when the convenience store is open to the public.

34. A height strip shall be located at each doorway entering and exiting the convenience store.

35. The owner shall retain landscapers to regularly maintain, replace and upgrade the landscaping that surrounds the property, including the removal of all snow and ice from the parking lots, driveways and sidewalks. In addition, employees shall walk the property on a regular basis to pick up debris, empty garbage cans, restock self-service washer fluids and paper towels, and to monitor the entire property in order to maintain it in a first class condition.

36. The owner shall obtain all permits and licenses required to operate its business. Those permits and licenses allow for the sale of petroleum, alcohol, tobacco, food, and related items sold in its business, issued from the various government agencies.

37. All signs shall comply with Article X of Chapter 420 of the Village Municipal Code and with the BP Amoco PUD Ordinance on file with the Village. All signs shall be in good working order, properly maintained or repaired as needed, painted and well-kept.

38. The following types of signs are prohibited and shall not be installed. For a complete listing of prohibited signs refer to the Article X of Chapter 420 of the Village Municipal Code.:

    a. Any sign with flashing or pulsating lights.

    b. Any inflatable sign, including but not limited to tethered balloon signs or other gas-filled figures.

    c. Any temporary, spring-action metal advertising sign used, for example, to advertise cigarette or gasoline prices.

    d. Any spotlights used as visual attention-getters.

    e. Strings of lights, tinsel, pennants, pinwheels or other similar devices hanging between two points or attached to light poles, cars, landscaping or structures on the property.

39. The Village had received numerous complaints relating to the operations of the station site including litter and garbage on the site; broken light standards and signs; inoperable pumps; pumps that don't issue receipts; dead landscaping; violation of security protocol; interior building damage to walls, floors , painting, counters; garbage overflowing; illegal outside storage of product; allowing products to be stored outside; allowing a pothole to remain in the drive area causing damage of cares etc. These ongoing complaints must be addressed on a daily basis by the owners as a responsible business owner in the Village. The Zoning staff will conduct inspections on a semi-annual basis to ensure compliance with these issues.

40. The use, operations, site, building and structures shall be designed, laid out, constructed and maintained in full compliance with the approved Site and Operational Plans, the Conditional Use Permit, Liquor and Tobacco Licenses and all other applicable provisions of the Village Municipal Code and all other applicable Village, County, State or federal regulations.

41. The use, operations, site, building and structures shall be conducted in such a way as to constitute a public or private nuisance or to violate any of the Performance Standards set out in Section 420-38 of the Village Zoning Ordinance.

42. The site, building and garbage dumpster structure shall be maintained in a clean, neat, presentable, aesthetically pleasing, odor–free, structurally sound and nonhazardous condition inside and outside of the store at all times. All litter and debris outside of the structures shall be promptly removed on a daily basis. The garbage dumpster enclosure doors shall not be left open on garbage day and shall be promptly closed and secured after the pick-up of garbage.

43. The handicapped accessible parking spaces shall be appropriately signed, painted on the pavement and maintained pursuant to ADA requirements.

44. All exterior mechanical units, antennae and/or satellite dishes, whether roof-mounted or ground-mounted, shall be screened from the general public's view.

45. All required landscaping shall be installed per the plans and written verification and/or certification shall be provided to the Village by the landscape installer/designer that the landscaping has been installed in accordance with the Village approved landscape plan.

46. On site building alterations/modifications or changes in the operations or use of the site shall be in strict conformity to the Village approved plans and the Settlement Agreement approved in connection with the petition for this Conditional Use Permit. Violations of these conditions may result in the suspension or revocation of the conditional use permit and zoning violation prosecution, or both.

47. All uses shall conform to applicable Village Ordinance requirements, and to all other applicable local, County, State and Federal requirements relating to land use, buildings, development control, land division, environmental protection, sewer service, water service, storm water discharges and storm water management, noise, streets and highways and fire protection; and in the event of conflicting requirements or standards, the most restrictive as determined by the Village shall apply.

48. All required permits shall be obtained from the Village prior to commencing work.

49. Operation of the uses granted herein shall be in strict conformity to the approved and documents filed and approved in connection with the petition for Site and Operational Plan approval. Any violation of these conditions may result in the revocation of the approval or zoning violation prosecution, or both.

50. No changes to the exterior site, building or structures shall be made without the Village's approval. No painting of the exterior masonry of the BP station building or garbage dumpster enclosure shall be permitted, unless expressly permitted by the Village. Colors for building trim work shall be approved by the Village.

51. Any addition, alteration, extension, expansion or other proposed change in the approved operation shall be subject to the Village's Conditional Use procedures as if such use were being established anew.

52. The Conditional Use Permit shall become effective upon the execution and recording of said document and shall constitute an effective covenant running with the land.

53. The Conditional Use Permit is subject to amendment and termination in accordance with the provisions of the Village General Zoning and Floodplain/Shoreland Zoning Ordinance.

54. **This Conditional Use Permit is valid until June 10, 2014. In order for this facility to continue to operate after June 10, 2014, an application for an extension to this conditional use permit shall be reconsidered by the Plan Commission at a regularly scheduled public hearing prior to June 10, 2014.**

Granted by the action of the Village of Pleasant Prairie Plan Commission the 28th day of May 2013 and amended by action of the Plan Commission on the 13th day of January, 2014.

Thomas W. Terwall
Plan Commission Chairman

ATTEST:

Donald Hackbarth
Secretary

[Owners signature on following page]

OWNER: VIDHYA Corp, VIII, Inc.

Dixit Patel
Dixit Patel
President

ACKNOWLEDGMENT
STATE OF WISCONSIN)
SS
KENOSHA COUNTY)

This instrument was acknowledged before me in KENOSHA (city) WISCONSIN (state), on this 15th day of MAY, 2014 by Dixit Patel, President on behalf of VIDHYA Corp, VIII, Inc.

Print Name: JMICHAEL MCTERNAN
Notary Public, KENOSHA County, WI
My Commission ~~Expires:~~ Is Permanent

JOHN MICHAEL McTERNAN NOTARY PUBLIC STATE OF WISCONSIN

THIS INSTRUMENT WAS DRAFTED BY:
Jean M. Werbie-Harris
Community Development Director
Village of Pleasant Prairie
9915 39th Avenue
Pleasant Prairie, Wisconsin 53158

Exhibit 5

DOCUMENT
1740291
RECORDED
At Kenosha County, Kenosha WI 53140
JoEllyn M. Storz, Register of Deeds
December 30, 2014 2:39 PM
$30.00
Pages 8

VILLAGE OF PLEASANT PRAIRIE
CONDITIONAL USE GRANT NO. 13-03 2nd Amendment

Before the Village of Pleasant Prairie Plan Commission, Kenosha County, Wisconsin, in regard to the property located at 10477 120th Avenue.

Return to:
Village of Pleasant Prairie
9915 39th Avenue
Pleasant Prairie, WI 53158

Tax Parcel Number:
92-4-122-302-0130

Legal Description: Lot 14 of CSM 1489 (Document #872365) located in the Northwest One Quarter of U.S. Land Survey Section 30, Township 1 North, Range 22 East in the Fourth Principal Meridian, lying and being in the Village of Pleasant Prairie, Kenosha County Wisconsin.

8.

WHEREAS, the Zoning Code and Zoning District Map of the Village of Pleasant Prairie, pursuant to State Statute, provides that the premises may not be used of right for the purpose hereinafter described but that upon petition such use may be approved by the Village of Pleasant Prairie as a Conditional Use Grant in particular circumstances as defined by the standards in the Zoning Ordinance; and

WHEREAS, such petition having been made to allow BP Amoco to operate a gasoline station and convenience store and to install a carbon treatment system that will treat existing contaminated ground water from several reported hazard substance releases at the site and public hearing held thereon, the Village Plan Commission has determined that by reason of the particular nature, character and circumstances of the proposed use, and of the specific and contemporary conditions, that the grant of such use upon the terms and conditions hereinafter prescribed would be consistent with the requirements of the Zoning Ordinance. Specifically, based upon the information presented at the public hearing and the comments presented in this document that the project meets the following standards for granting a Conditional Use Permit in that the project/use:

- The project does not impede the traffic patterns on the site or cause traffic congestion or traffic circulation problems and the traffic patterns on the site do not hinder, harm or distract the provisions of public services.
- The project does not impair an adequate supply of light and air to the adjacent properties.
- The project does not increase danger of fire--in so far as the danger of fire does not exceed the capabilities of the Village Fire & Rescue Department.
- The project does not appear to create storm water flooding or drainage, create obnoxious odors, problems or otherwise endanger the public health, safety or welfare.

- There are no existing identified hazards, dangers, harm, noxiousness, offensiveness, nuisance or other adversity or inconsistency that would endanger the public's health, safety or welfare related to the proposed use. However, previous soil contaminations are being addressed as part of and as a condition of this Conditional Use Permit
- The proposed and applied for use on this particular parcel is not inherently inconsistent with the B-4, Freeway Service Business District in which it is located or the adjoining zoning districts and land uses.

NOW THEREFORE, a Conditional Use Permit is granted, subject to compliance with the terms and conditions hereinafter stated to allow BP Amoco to operate a gasoline station and convenience store and to install a carbon treatment system that will treat existing contaminated ground water from several reported hazard substance releases at the site.

1. Compliance with PUD Ordinance #12-40, including the Digital Security Imaging System Agreement on file with the Village.
2. **Compliance with the terms and conditions of the executed Settlement Agreement approved by the Village Board on November 19, 2012, 1st Amendment to the Settlement Agreement approved on April 1, 2013 and 2nd Amendment to the Settlement Agreement approved on February 3, 2014 on file with the Village.**
3. Compliance with the Site and Operational Plans as conditionally approved by the Village Plan Commission on November 19, 2012 on file with the Village.
4. Compliance with the Preliminary Site Investigation Work Plan dated November 14, 2012. The Remedial Action Plan and Remedial Design Report shall be compliant with NR 700 shall be submitted to the Village.
5. Compliance with the WI DNR WPDES Permit issued on November 2, 2012.
6. Compliance with the Wisconsin Department of Transportation Work in the Right-of-Way Permit dated November 26, 2012.
7. Provide to the Village a copy of an ongoing agreement shall be executed by the Owner and an appropriate environmental firm to accomplish the following:
   - to monitor the operation and maintenance of the groundwater treatment system on a regular basis;
   - to continue influent and effluent sampling and analysis on the schedule prescribed in the stipulated agreement; and
   - to respond as needed to onsite emergencies related to the treatment system and alarms.
8. All hard surfaced areas including the parking lot areas, drive lanes, paved areas adjacent to the pumps, sidewalks, etc. shall be clean, neat and free from pot holes or other cracks which present a safety risk to the pedestrians or traveling public. The hard surface areas of the site shall be maintained and free of any debris or potholes which may cause distractions or damages to vehicles. All pavement markings shall be done in yellow or white reflective paint.
9. The gas station and convenience store shall operate in an organized, well-kept, clean, neat and professional manner. The inside of the store shall be maintained, painted, and clean for the public. Damaged or dirty walls, floors, coolers, bathrooms, racking, displays lighting, etc. shall be taken care of or repaired promptly. Malfunctioning gas pumps shall be repaired as soon as possible.

9. A Kenosha County Health Department permit and regular inspections will be conducted on the premises. Violations may result in the suspension or revocation of the Health Permit and the Conditional Use Permit.

10. The hours of operation (when the public is allowed to enter or remain on site for business purposes) shall be limited from 5:00 a.m. to 12:00 a.m. daily. A Temporary Use Permit may be issued for 24-hour operations during any holiday period subject to approval of the Village Police Chief. In addition, a 24-hour holiday operation will require the owners to enter into an agreement and pay for the overtime services of the Police Department, as determined by the Police Chief. Pursuant to the Zoning Ordinance and liquor license requirements, the store is allowed to be open until midnight; however, Class A Beer is only allowed to be sold from 8:00 a.m. to midnight and Class A Intoxicated Liquor is only allowed to be sold from 8:00 am to 9:00 p.m.

11. Currently, deliveries and shipments are allowed only during the time that BP is open to the public.

12. The delivery hours or any other activities outside the principal building that might cause a disturbance to neighboring areas (e.g., outside loading or unloading, the arrival of deliveries, idling of delivery trucks, beeping of backing vehicles, and garbage pickup), except for snow removal, is allowed only from 6:00 a.m. to 10:00 p.m.

13. BP Amoco Gas Station and Convenience Store located at 10477 120th Avenue is a self-service gasoline and diesel station, selling petroleum products to consumers of passenger vehicles and light trucks. It does not service or sell petroleum products to over-the-road trucks, cabs or other specialized commercial or construction vehicles. In addition, BP operates a convenience store that provides various grocery store and automobile supplies and accessories, along with a quick service restaurant, bakery, self-service coffee bar and soda fountain, and an e-commerce area for computerized assistance with weather and traffic information. The quick service restaurant provides seating for approximately 12 people and quick food selections of bakery items, sandwiches, soups and salads. The facility also provides separate men's and women's washrooms, and various other related convenience service amenities, including but not limited to, vacuum cleaners and compressed air for automobile maintenance, automated teller machine, along with the sale of alcohol and tobacco products as authorized by its license.

14. Due to several reported hazardous substance releases at the BP gas station dating back to 1993, the owner's consultants have developed and installed a carbon treatment system that treats contaminated ground water. This system needs to be installed in an enclosed and heated facility. As a result, the southeast corner of the building was expanded in order to house the filters and pumps that are necessary to operate the carbon treatment system. This system is detailed in a Settlement Agreement being entered into between the property owner and the Village, and the property owner obtained all applicable permits before installing said system.

15. The expansion of the building measures approximately 420 square feet (30 feet by 15 feet) and simply "square" the building foot print. The same exterior building materials (brick and trim) were used in order to match the expansion to the existing building.

16. No through penetration between the new carbon room addition and the existing building shall be allowed to ensure no transfer of potentially toxic chemicals such as but not limited to carbon monoxide.

17. The 420 square foot addition <u>shall not</u> be used for the storage of any materials including but not limited, cleaning supplies, extra toilet paper or other supplies, merchandize or other products.

18. The 420 square foot addition is subject to compliance with the following conditions from the Village Building Inspection Department:

    a. All building, plumbing, lighting and HVAC plans shall be designed to the IBC Codes, prior to submitting (4 sets) for building permits from the Village of Pleasant Prairie. Since the total cubic footage of the accessory structure is less than 100,000 cubic ft. this can be a Municipal review. All sub-contractors will be required to apply for permits.

    b. Halls, corridors, stairways, passageways, work aisles and other means of egress from factories, offices and mercantile buildings shall have emergency lighting and exit lighting per Article 700 of the NEC, SPS 316.46 Which requires interior and exterior lighting. The existing plans only show interior lighting. The Village Fire & Rescue Department shall be contacted for further information and requirements. Contact Fire & Rescue Chief Doug McElmury at 262-694-8027.

    c. The architect(s)/ professional engineer(s) shall submit, to the Village and State, the compliance statement, Form SBD 9720, prior to the final inspection with the Village Building Inspection and Fire & Rescue Departments.

    d. The electrical contractor shall to be licensed by the Village of Pleasant Prairie. The electrical contractor shall obtain a permit from the Village prior to beginning work. All contractors must be licensed or registered with the State of Wisconsin.

    e. All fire alarm installations require plan review and permit from the Village of Pleasant Prairie Fire & Rescue Department.

19. Downspouts shall be tied into the on-site storm sewer system and shall not be discharged onto existing pavement.

20. Landscaping on the site shall be installed, watered, weeded, trimmed and maintained is good condition at all times. Litter and debris shall be removed from the landscaping on a daily basis. Damaged, dying or dead plant material shall be removed and new plantings shall be installed on a regular basis. Mulch shall be raked in place on a regular basis and replaced yearly.

21. The carbon treatment system will not create any disturbance to the surrounding property owners as it will be housed in an enclosed and insulated expansion of the building. It is anticipated that the system will operate off and on for several years, dependent on the rise of ground water due to changes in the weather.

22. This system will not require any additional staff to manage and operate, as it will be automated and will only occasionally require the replacement of carbon filters that will be disposed of using sealed drums provided and retrieved by qualified environmental disposal companies. Moreover, the system will not alter existing operations of the gasoline station and convenience store, as those operations will continue as normal.

23. Currently, there are seven (7) full time and three (3) part time employees, but additional seasonal help is retained during peak holiday seasons. Currently, there are only two shifts of employees, but a third shift has been added when the hours are expanded during the Midnight Madness hours for Thanksgiving evening/Black Friday. There are currently 23 parking spaces on the site, but with the expansion of the building, two (2) parking spaces are being removed, leaving a total of 21 parking spaces (one handicapped access parking space, and 20 conventional parking spaces). The number of parking spaces excludes the cars that can be parked at the pumps.

24. Pursuant to the Village Zoning Ordinance the minimum parking requirements for a gasoline station with a convenience store is five (5) spaces per each 2,000 square feet of gross floor area plus 1 space for each employee on the largest shift plus the required handicapped accessible parking spaces pursuant to the state code. Therefore, a minimum of 13 spaces plus their required handicapped accessible parking spaces is required (5 spaces plus 3 spaces plus 5 spaces (assuming no more than five workers on site).

25. It is anticipated that traffic volumes of 500 to 1,000 daily trips will continue, and there will be no truck trips other than deliveries of goods to the BP. The main products being sold at the BP include, but are not limited to: gasoline and diesel fuels, related automobile supplies and parts, along with food and beverages, all of which are currently being sold at the BP, which will continue after the expansion. Aside from the installation of the carbon treatment system, all of the existing equipment will continue to be utilized in the operation of the BP (petroleum delivery systems, coolers, ovens, and related food preparation equipment).

26. Aside from the disposal of the carbon filters, the BP only has normal household cleaners used in the maintenance of the business in order to clean the food preparation and service areas, floors and bathrooms. The only waste that is disposed of at the BP is spoiled food and drink products, grey water waste and sanitary waste from the bathrooms.

27. In accordance with the DSIS Agreement, the security cameras shall be inaccessible to employees. Conspicuous signs shall be posted and maintained at the entrance stating that security cameras with an inaccessible recording devise is in place on the premises. Said system shall be maintained in working order at all times and the Village of Pleasant Prairie Police Department shall be promptly provided any requested video. The recording shall be kept in an archive for a minimum of two weeks and the Pleasant Prairie Police Department shall have remote access to the system to monitor and download video. Specifically, internet access shall be provided which would allow the Police Department to have "live time" monitoring of the BP store and site.

28. The parking lot shall be illuminated to provide sufficient lighting for the public's safety and for the security cameras to operate effectively per the Village's satisfaction.

29. A clear and unobstructed view of the cash registers and transaction areas shall be maintained from the internal 30-foot wide on-site circulation access roadway.

30. The building shall be equipped with and shall use an inaccessible drop safe.

31. Between 10:00-12:00 p.m. and 5:00-7:00 a.m. at least two (2) employees shall be working on-site unless the business has taken measures to protect a lone clerk such as the installation of bullet resistant glass or other equipment as approved by the Police Department, making the lone employee inaccessible.

32. Installation and full operation of a hold-up alarm, which is monitored by a UL listed central station with functioning telephone service, shall be used at the BP station building.

33. The cash register shall not be left unattended for periods of time when the convenience store is open to the public.

34. A height strip shall be located at each doorway entering and exiting the convenience store.

35. The owner shall retain landscapers to regularly maintain, replace and upgrade the landscaping that surrounds the property, including the removal of all snow and ice from the parking lots, driveways and sidewalks. In addition, employees shall walk the property on a regular basis to pick up debris, empty garbage cans, restock self-service washer fluids and paper towels, and to monitor the entire property in order to maintain it in a first class condition.

36. The owner shall obtain all permits and licenses required to operate its business. Those permits and licenses allow for the sale of petroleum, alcohol, tobacco, food, and related items sold in its business, issued from the various government agencies.

37. All signs shall comply with Article X of Chapter 420 of the Village Municipal Code and with the BP Amoco PUD Ordinance on file with the Village. All signs shall be in good working order, properly maintained or repaired as needed, painted and well-kept.

38. The following types of signs are prohibited and shall not be installed. For a complete listing of prohibited signs refer to the Article X of Chapter 420 of the Village Municipal Code.:

    a. Any sign with flashing or pulsating lights.

    b. Any inflatable sign, including but not limited to tethered balloon signs or other gas-filled figures.

    c. Any temporary, spring-action metal advertising sign used, for example, to advertise cigarette or gasoline prices.

    d. Any spotlights used as visual attention-getters.

    e. Strings of lights, tinsel, pennants, pinwheels or other similar devices hanging between two points or attached to light poles, cars, landscaping or structures on the property.

39. The Village had received numerous complaints relating to the operations of the station site including litter and garbage on the site; broken light standards and signs; inoperable pumps; pumps that don't issue receipts; dead landscaping; violation of security protocol; interior building damage to walls, floors , painting, counters; garbage overflowing; illegal outside storage of product; allowing products to be stored outside; allowing a pothole to remain in the drive area causing damage of cares etc. These ongoing complaints must be addressed on a daily basis by the owners as a responsible business owner in the Village. The Zoning staff will conduct inspections on a semi-annual basis to ensure compliance with these issues.

40. The use, operations, site, building and structures shall be designed, laid out, constructed and maintained in full compliance with the approved Site and Operational Plans, the Conditional Use Permit, Liquor and Tobacco Licenses and all other applicable provisions of the Village Municipal Code and all other applicable Village, County, State or federal regulations.

41. The use, operations, site, building and structures shall be conducted in such a way as to constitute a public or private nuisance or to violate any of the Performance Standards set out in Section 420-38 of the Village Zoning Ordinance.

42. The site, building and garbage dumpster structure shall be maintained in a clean, neat, presentable, aesthetically pleasing, odor–free, structurally sound and nonhazardous condition inside and outside of the store at all times. All litter and debris outside of the structures shall be promptly removed on a daily basis. The garbage dumpster enclosure doors shall not be left open on garbage day and shall be promptly closed and secured after the pick-up of garbage.

43. The handicapped accessible parking spaces shall be appropriately signed, painted on the pavement and maintained pursuant to ADA requirements.

44. All exterior mechanical units, antennae and/or satellite dishes, whether roof-mounted or ground-mounted, shall be screened from the general public's view.

45. All required landscaping shall be installed per the plans and written verification and/or certification shall be provided to the Village by the landscape installer/designer that the landscaping has been installed in accordance with the Village approved landscape plan.

46. On site building alterations/modifications or changes in the operations or use of the site shall be in strict conformity to the Village approved plans and the Settlement Agreement approved in connection with the petition for this Conditional Use Permit. Violations of these conditions may result in the suspension or revocation of the conditional use permit and zoning violation prosecution, or both.

47. All uses shall conform to applicable Village Ordinance requirements, and to all other applicable local, County, State and Federal requirements relating to land use, buildings, development control, land division, environmental protection, sewer service, water service, storm water discharges and storm water management, noise, streets and highways and fire protection; and in the event of conflicting requirements or standards, the most restrictive as determined by the Village shall apply.

48. All required permits shall be obtained from the Village prior to commencing work.

49. Operation of the uses granted herein shall be in strict conformity to the approved and documents filed and approved in connection with the petition for Site and Operational Plan approval. Any violation of these conditions may result in the revocation of the approval or zoning violation prosecution, or both.

50. No changes to the exterior site, building or structures shall be made without the Village's approval. No painting of the exterior masonry of the BP station building or garbage dumpster enclosure shall be permitted, unless expressly permitted by the Village. Colors for building trim work shall be approved by the Village.

51. Any addition, alteration, extension, expansion or other proposed change in the approved operation shall be subject to the Village's Conditional Use procedures as if such use were being established anew.

52. The Conditional Use Permit shall become effective upon the execution and recording of said document and shall constitute an effective covenant running with the land.

53. The Conditional Use Permit is subject to amendment and termination in accordance with the provisions of the Village General Zoning and Floodplain/Shoreland Zoning Ordinance.

54. **This Conditional Use Permit is valid until June 10, 2015. In order for this facility to continue to operate after June 10, 2015, an application for an extension to this conditional use permit shall be reconsidered by the Plan Commission at a regularly scheduled public hearing prior to June 10, 2015.**

Granted by the action of the Village of Pleasant Prairie Plan Commission the 28th day of May 2013 and amended by action of the Plan Commission on the 13th day of January, 2014 and the 9th day of June, 2014.

Thomas W. Terwall
Plan Commission Chairman

ATTEST:

Donald Hackbarth
Secretary

[Owners signature on following page]

OWNER: VIDHYA Corp, VIII, Inc.

Dixit P. Patel
Dixit Patel
President

ACKNOWLEDGMENT
STATE OF WI)
SS
KENOSHA COUNTY)

This instrument was acknowledged before me in ~~October 21~~ Kenosha (city) WISCONSIN (state), on this 21 day of October, 2014 by Dixit Patel, President on behalf of VIDHYA Corp, VIII, Inc.

Print Name: John Michael McTernan
Notary Public, Kenosha County, WI
My Commission ~~Expires:~~ Is Permanent

JOHN MICHAEL McTERNAN
NOTARY PUBLIC
STATE OF WISCONSIN

THIS INSTRUMENT WAS DRAFTED BY:
Jean M. Werbie-Harris
Community Development Director
Village of Pleasant Prairie
9915 39th Avenue
Pleasant Prairie, Wisconsin 53158

Exhibit 6

DOCUMENT
1754732
RECORDED
At Kenosha County, Kenosha WI 53140
JoEllyn M. Storz, Register of Deeds
August 06, 2015 2:23 PM
$30.00
Pages 8

VILLAGE OF PLEASANT PRAIRIE
CONDITIONAL USE GRANT NO. 13-03 3rd Amendment

Before the Village of Pleasant Prairie Plan Commission, Kenosha County, Wisconsin, in regard to the property located at 10477 120th Avenue.

Return to:
Village of Pleasant Prairie
9915 39th Avenue
Pleasant Prairie, WI 53158

Tax Parcel Number:
92-4-122-302-0130

Legal Description: Lot 14 of CSM 1489 (Document #872365) located in the Northwest One Quarter of U.S. Land Survey Section 30, Township 1 North, Range 22 East in the Fourth Principal Meridian, lying and being in the Village of Pleasant Prairie, Kenosha County Wisconsin.

8

WHEREAS, the Zoning Code and Zoning District Map of the Village of Pleasant Prairie, pursuant to State Statute, provides that the premises may not be used of right for the purpose hereinafter described but that upon petition such use may be approved by the Village of Pleasant Prairie as a Conditional Use Grant in particular circumstances as defined by the standards in the Zoning Ordinance; and

WHEREAS, such petition having been made to allow BP Amoco to operate a gasoline station and convenience store and to install a carbon treatment system that will treat existing contaminated ground water from several reported hazard substance releases at the site and public hearing held thereon, the Village Plan Commission has determined that by reason of the particular nature, character and circumstances of the proposed use, and of the specific and contemporary conditions, that the grant of such use upon the terms and conditions hereinafter prescribed would be consistent with the requirements of the Zoning Ordinance. Specifically, based upon the information presented at the public hearing and the comments presented in this document that the project meets the following standards for granting a Conditional Use Permit in that the project/use:

- The project does not impede the traffic patterns on the site or cause traffic congestion or traffic circulation problems and the traffic patterns on the site do not hinder, harm or distract the provisions of public services.
- The project does not impair an adequate supply of light and air to the adjacent properties.
- The project does not increase danger of fire--in so far as the danger of fire does not exceed the capabilities of the Village Fire & Rescue Department.
- The project does not appear to create storm water flooding or drainage, create obnoxious odors, problems or otherwise endanger the public health, safety or welfare.

- There are no existing identified hazards, dangers, harm, noxiousness, offensiveness, nuisance or other adversity or inconsistency that would endanger the public's health, safety or welfare related to the proposed use. However, previous soil contaminations are being addressed as part of and as a condition of this Conditional Use Permit
- The proposed and applied for use on this particular parcel is not inherently inconsistent with the B-4, Freeway Service Business District in which it is located or the adjoining zoning districts and land uses.

NOW THEREFORE, a Conditional Use Permit is granted, subject to compliance with the terms and conditions hereinafter stated to allow BP Amoco to operate a gasoline station and convenience store and to install a carbon treatment system that will treat existing contaminated ground water from several reported hazard substance releases at the site.

1. Compliance with PUD Ordinance #12-40, including the Digital Security Imaging System Agreement on file with the Village.
2. **Compliance with the terms and conditions of the executed Settlement Agreement approved by the Village Board on November 19, 2012, 1st Amendment to the Settlement Agreement approved on April 1, 2013 and 2nd Amendment to the Settlement Agreement approved on February 3,' 2014 and the 3rd Amendment to the Settlement Agreement approved on June 15, 2015 on file with the Village.**
3. Compliance with the Site and Operational Plans as conditionally approved by the Village Plan Commission on November 19, 2012 on file with the Village.
4. Compliance with the Preliminary Site Investigation Work Plan dated November 14, 2012. The Remedial Action Plan and Remedial Design Report shall be compliant with NR 700 shall be submitted to the Village.
5. Compliance with the WI DNR WPDES Permit issued on November 2, 2012.
6. Compliance with the Wisconsin Department of Transportation Work in the Right-of-Way Permit dated November 26, 2012.
7. Provide to the Village a copy of an ongoing agreement shall be executed by the Owner and an appropriate environmental firm to accomplish the following:
   - to monitor the operation and maintenance of the groundwater treatment system on a regular basis;
   - to continue influent and effluent sampling and analysis on the schedule prescribed in the stipulated agreement; and
   - to respond as needed to onsite emergencies related to the treatment system and alarms.
8. All hard surfaced areas including the parking lot areas, drive lanes, paved areas adjacent to the pumps, sidewalks, etc. shall be clean, neat and free from pot holes or other cracks which present a safety risk to the pedestrians or traveling public. The hard surface areas of the site shall be maintained and free of any debris or potholes which may cause distractions or damages to vehicles. All pavement markings shall be done in yellow or white reflective paint.
9. The gas station and convenience store shall operate in an organized, well-kept, clean, neat and professional manner. The inside of the store shall be maintained, painted, and clean for the public. Damaged or dirty walls, floors, coolers, bathrooms, racking, displays lighting, etc. shall be taken care of or repaired promptly. Malfunctioning gas pumps shall be repaired as soon as possible.

9. A Kenosha County Health Department permit and regular inspections will be conducted on the premises. Violations may result in the suspension or revocation of the Health Permit and the Conditional Use Permit.

10. The hours of operation (when the public is allowed to enter or remain on site for business purposes) shall be limited from 5:00 a.m. to 12:00 a.m. daily. A Temporary Use Permit may be issued for 24-hour operations during any holiday period subject to approval of the Village Police Chief. In addition, a 24-hour holiday operation will require the owners to enter into an agreement and pay for the overtime services of the Police Department, as determined by the Police Chief. Pursuant to the Zoning Ordinance and liquor license requirements, the store is allowed to be open until midnight; however, Class A Beer is only allowed to be sold from 8:00 a.m. to midnight and Class A Intoxicated Liquor is only allowed to be sold from 8:00 am to 9:00 p.m.

11. Currently, deliveries and shipments are allowed only during the time that BP is open to the public.

12. The delivery hours or any other activities outside the principal building that might cause a disturbance to neighboring areas (e.g., outside loading or unloading, the arrival of deliveries, idling of delivery trucks, beeping of backing vehicles, and garbage pickup), except for snow removal, is allowed only from 6:00 a.m. to 10:00 p.m.

13. BP Amoco Gas Station and Convenience Store located at 10477 120th Avenue is a self-service gasoline and diesel station, selling petroleum products to consumers of passenger vehicles and light trucks. It does not service or sell petroleum products to over-the-road trucks, cabs or other specialized commercial or construction vehicles. In addition, BP operates a convenience store that provides various grocery store and automobile supplies and accessories, along with a quick service restaurant, bakery, self-service coffee bar and soda fountain, and an e-commerce area for computerized assistance with weather and traffic information. The quick service restaurant provides seating for approximately 12 people and quick food selections of bakery items, sandwiches, soups and salads. The facility also provides separate men's and women's washrooms, and various other related convenience service amenities, including but not limited to, vacuum cleaners and compressed air for automobile maintenance, automated teller machine, along with the sale of alcohol and tobacco products as authorized by its license.

14. Due to several reported hazardous substance releases at the BP gas station dating back to 1993, the owner's consultants have developed and installed a carbon treatment system that treats contaminated ground water. This system needs to be installed in an enclosed and heated facility. As a result, the southeast corner of the building was expanded in order to house the filters and pumps that are necessary to operate the carbon treatment system. This system is detailed in a Settlement Agreement being entered into between the property owner and the Village, and the property owner obtained all applicable permits before installing said system.

15. The expansion of the building measures approximately 420 square feet (30 feet by 15 feet) and simply "square" the building foot print. The same exterior building materials (brick and trim) were used in order to match the expansion to the existing building.

16. No through penetration between the new carbon room addition and the existing building shall be allowed to ensure no transfer of potentially toxic chemicals such as but not limited to carbon monoxide.

17. The 420 square foot addition <u>shall not</u> be used for the storage of any materials including but not limited, cleaning supplies, extra toilet paper or other supplies, merchandize or other products.

18. The 420 square foot addition is subject to compliance with the following conditions from the Village Building Inspection Department:

    a. All building, plumbing, lighting and HVAC plans shall be designed to the IBC Codes, prior to submitting (4 sets) for building permits from the Village of Pleasant Prairie. Since the total cubic footage of the accessory structure is less than 100,000 cubic ft. this can be a Municipal review. All sub-contractors will be required to apply for permits.

    b. Halls, corridors, stairways, passageways, work aisles and other means of egress from factories, offices and mercantile buildings shall have emergency lighting and exit lighting per Article 700 of the NEC, SPS 316.46 Which requires interior and exterior lighting. The existing plans only show interior lighting. The Village Fire & Rescue Department shall be contacted for further information and requirements. Contact Fire & Rescue Chief Doug McElmury at 262-694-8027.

    c. The architect(s)/ professional engineer(s) shall submit, to the Village and State, the compliance statement, Form SBD 9720, prior to the final inspection with the Village Building Inspection and Fire & Rescue Departments.

    d. The electrical contractor shall to be licensed by the Village of Pleasant Prairie. The electrical contractor shall obtain a permit from the Village prior to beginning work. All contractors must be licensed or registered with the State of Wisconsin.

    e. All fire alarm installations require plan review and permit from the Village of Pleasant Prairie Fire & Rescue Department.

19. Downspouts shall be tied into the on-site storm sewer system and shall not be discharged onto existing pavement.

20. Landscaping on the site shall be installed, watered, weeded, trimmed and maintained is good condition at all times. Litter and debris shall be removed from the landscaping on a daily basis. Damaged, dying or dead plant material shall be removed and new plantings shall be installed on a regular basis. Mulch shall be raked in place on a regular basis and replaced yearly.

21. The carbon treatment system will not create any disturbance to the surrounding property owners as it will be housed in an enclosed and insulated expansion of the building. It is anticipated that the system will operate off and on for several years, dependent on the rise of ground water due to changes in the weather.

22. This system will not require any additional staff to manage and operate, as it will be automated and will only occasionally require the replacement of carbon filters that will be disposed of using sealed drums provided and retrieved by qualified environmental disposal companies. Moreover, the system will not alter existing operations of the gasoline station and convenience store, as those operations will continue as normal.

23. Currently, there are seven (7) full time and three (3) part time employees, but additional seasonal help is retained during peak holiday seasons. Currently, there are only two shifts of employees, but a third shift has been added when the hours are expanded during the Midnight Madness hours for Thanksgiving evening/Black Friday. There are currently 23 parking spaces on the site, but with the expansion of the building, two (2) parking spaces are being removed, leaving a total of 21 parking spaces (one handicapped access parking space, and 20 conventional parking spaces). The number of parking spaces excludes the cars that can be parked at the pumps.

24. Pursuant to the Village Zoning Ordinance the minimum parking requirements for a gasoline station with a convenience store is five (5) spaces per each 2,000 square feet of gross floor area plus 1 space for each employee on the largest shift plus the required handicapped accessible parking spaces pursuant to the state code. Therefore, a minimum of 13 spaces plus their required handicapped accessible parking spaces is required (5 spaces plus 3 spaces plus 5 spaces (assuming no more than five workers on site).

25. It is anticipated that traffic volumes of 500 to 1,000 daily trips will continue, and there will be no truck trips other than deliveries of goods to the BP. The main products being sold at the BP include, but are not limited to: gasoline and diesel fuels, related automobile supplies and parts, along with food and beverages, all of which are currently being sold at the BP, which will continue after the expansion. Aside from the installation of the carbon treatment system, all of the existing equipment will continue to be utilized in the operation of the BP (petroleum delivery systems, coolers, ovens, and related food preparation equipment).

26. Aside from the disposal of the carbon filters, the BP only has normal household cleaners used in the maintenance of the business in order to clean the food preparation and service areas, floors and bathrooms. The only waste that is disposed of at the BP is spoiled food and drink products, grey water waste and sanitary waste from the bathrooms.

27. In accordance with the DSIS Agreement, the security cameras shall be inaccessible to employees. Conspicuous signs shall be posted and maintained at the entrance stating that security cameras with an inaccessible recording devise is in place on the premises. Said system shall be maintained in working order at all times and the Village of Pleasant Prairie Police Department shall be promptly provided any requested video. The recording shall be kept in an archive for a minimum of two weeks and the Pleasant Prairie Police Department shall have remote access to the system to monitor and download video. Specifically, internet access shall be provided which would allow the Police Department to have "live time" monitoring of the BP store and site.

28. The parking lot shall be illuminated to provide sufficient lighting for the public's safety and for the security cameras to operate effectively per the Village's satisfaction.

29. A clear and unobstructed view of the cash registers and transaction areas shall be maintained from the internal 30-foot wide on-site circulation access roadway.

30. The building shall be equipped with and shall use an inaccessible drop safe.

31. Between 10:00-12:00 p.m. and 5:00-7:00 a.m. at least two (2) employees shall be working on-site unless the business has taken measures to protect a lone clerk such as the installation of bullet resistant glass or other equipment as approved by the Police Department, making the lone employee inaccessible.

32. Installation and full operation of a hold-up alarm, which is monitored by a UL listed central station with functioning telephone service, shall be used at the BP station building.

33. The cash register shall not be left unattended for periods of time when the convenience store is open to the public.

34. A height strip shall be located at each doorway entering and exiting the convenience store.

35. The owner shall retain landscapers to regularly maintain, replace and upgrade the landscaping that surrounds the property, including the removal of all snow and ice from the parking lots, driveways and sidewalks. In addition, employees shall walk the property on a regular basis to pick up debris, empty garbage cans, restock self-service washer fluids and paper towels, and to monitor the entire property in order to maintain it in a first class condition.

36. The owner shall obtain all permits and licenses required to operate its business. Those permits and licenses allow for the sale of petroleum, alcohol, tobacco, food, and related items sold in its business, issued from the various government agencies.

37. All signs shall comply with Article X of Chapter 420 of the Village Municipal Code and with the BP Amoco PUD Ordinance on file with the Village. All signs shall be in good working order, properly maintained or repaired as needed, painted and well-kept.

38. The following types of signs are prohibited and shall not be installed. For a complete listing of prohibited signs refer to the Article X of Chapter 420 of the Village Municipal Code.:

    a. Any sign with flashing or pulsating lights.

    b. Any inflatable sign, including but not limited to tethered balloon signs or other gas-filled figures.

    c. Any temporary, spring-action metal advertising sign used, for example, to advertise cigarette or gasoline prices.

    d. Any spotlights used as visual attention-getters.

    e. Strings of lights, tinsel, pennants, pinwheels or other similar devices hanging between two points or attached to light poles, cars, landscaping or structures on the property.

39. The Village had received numerous complaints relating to the operations of the station site including litter and garbage on the site; broken light standards and signs; inoperable pumps; pumps that don't issue receipts; dead landscaping; violation of security protocol; interior building damage to walls, floors , painting, counters; garbage overflowing; illegal outside storage of product; allowing products to be stored outside; allowing a pothole to remain in the drive area causing damage of cares etc. These ongoing complaints must be addressed on a daily basis by the owners as a responsible business owner in the Village. The Zoning staff will conduct inspections on a semi-annual basis to ensure compliance with these issues.

40. The use, operations, site, building and structures shall be designed, laid out, constructed and maintained in full compliance with the approved Site and Operational Plans, the Conditional Use Permit, Liquor and Tobacco Licenses and all other applicable provisions of the Village Municipal Code and all other applicable Village, County, State or federal regulations.

41. The use, operations, site, building and structures shall be conducted in such a way as to constitute a public or private nuisance or to violate any of the Performance Standards set out in Section 420-38 of the Village Zoning Ordinance.

42. The site, building and garbage dumpster structure shall be maintained in a clean, neat, presentable, aesthetically pleasing, odor–free, structurally sound and nonhazardous condition inside and outside of the store at all times. All litter and debris outside of the structures shall be promptly removed on a daily basis. The garbage dumpster enclosure doors shall not be left open on garbage day and shall be promptly closed and secured after the pick-up of garbage.

43. The handicapped accessible parking spaces shall be appropriately signed, painted on the pavement and maintained pursuant to ADA requirements.

44. All exterior mechanical units, antennae and/or satellite dishes, whether roof-mounted or ground-mounted, shall be screened from the general public's view.

45. All required landscaping shall be installed per the plans and written verification and/or certification shall be provided to the Village by the landscape installer/designer that the landscaping has been installed in accordance with the Village approved landscape plan.

46. On site building alterations/modifications or changes in the operations or use of the site shall be in strict conformity to the Village approved plans and the Settlement Agreement approved in connection with the petition for this Conditional Use Permit. Violations of these conditions may result in the suspension or revocation of the conditional use permit and zoning violation prosecution, or both.

47. All uses shall conform to applicable Village Ordinance requirements, and to all other applicable local, County, State and Federal requirements relating to land use, buildings, development control, land division, environmental protection, sewer service, water service, storm water discharges and storm water management, noise, streets and highways and fire protection; and in the event of conflicting requirements or standards, the most restrictive as determined by the Village shall apply.

48. All required permits shall be obtained from the Village prior to commencing work.

49. Operation of the uses granted herein shall be in strict conformity to the approved and documents filed and approved in connection with the petition for Site and Operational Plan approval. Any violation of these conditions may result in the revocation of the approval or zoning violation prosecution, or both.

50. No changes to the exterior site, building or structures shall be made without the Village's approval. No painting of the exterior masonry of the BP station building or garbage dumpster enclosure shall be permitted, unless expressly permitted by the Village. Colors for building trim work shall be approved by the Village.

51. Any addition, alteration, extension, expansion or other proposed change in the approved operation shall be subject to the Village's Conditional Use procedures as if such use were being established anew.

52. The Conditional Use Permit shall become effective upon the execution and recording of said document and shall constitute an effective covenant running with the land.

53. The Conditional Use Permit is subject to amendment and termination in accordance with the provisions of the Village General Zoning and Floodplain/Shoreland Zoning Ordinance.

54. **This Conditional Use Permit is valid until June 10, 2016. In order for this facility to continue to operate after June 10, 2016, an application for an extension to this conditional use permit shall be reconsidered by the Plan Commission at a regularly scheduled public hearing prior to June 10, 2016.**

Granted by the action of the Village of Pleasant Prairie Plan Commission the 28th day of May 2013 and amended by action of the Plan Commission on the 13th day of January, 2014, the 9th day of June, 2014 and the 8th day of June, 2015.

Thomas W. Terwall
Plan Commission Chairman

ATTEST:

Michael J. Serpe
Vice Chairman

[Owners signature on following page]

OWNER: VIDHYA Corp, VIII, Inc.

Dixit Patel
President

ACKNOWLEDGMENT
STATE OF WISCONSIN)
SS
KENOSHA COUNTY)

This instrument was acknowledged before me in Kenosha (city) WISCONSIN (state), on this 13th day of July, 2015 by Dixit Patel, President on behalf of VIDHYA Corp, VIII, Inc.

Print Name: J. MICHAEL MCTERNAN
Notary Public, Kenosha County, WI
My Commission ~~Expires~~: Is Permanent

JOHN MICHAEL McTERNAN
NOTARY
PUBLIC
STATE OF WISCONSIN

THIS INSTRUMENT WAS DRAFTED BY:
Jean M. Werbie-Harris
Community Development Director
Village of Pleasant Prairie
9915 39th Avenue
Pleasant Prairie, Wisconsin 53158

D. **PUBLIC HEARING AND CONSIDERATION OF PLAN COMMISSION RESOLUTION #16-07 FOR A COMPREHENSIVE PLAN AMENDMENT** for a portion of the Green Hill Farms Neighborhood Plan related to the development of the property at 8000 128th Street for the Village's new Residential Recycling Center.

Recommendation: Village staff recommends that the Plan Commission approve Plan Commission Resolution #16-07 and recommend that the Village Board approve the amendment to the Green Hill Farms Neighborhood Plan as presented at the May 23, 2016 Plan Commission meeting.

VILLAGE STAFF REPORT OF MAY 23, 2016

CONSIDERATION OF PLAN COMMISSION RESOLUTION #16-07 FOR A COMPREHENSIVE PLAN AMENDMENT for a portion of the Green Hill Farms Neighborhood Plan related to the development of the property at 8000 128th Street for the Village's new Residential Recycling Center.

On May 9, 2016 the Plan Commission conditionally approved a Conditional Use Permit including Site and Operational Plans to operate the Village of Pleasant Prairie Residential Recycling Center at 8000 128th Street. This facility is the Village's new residential compost site that is being relocated from the Roger Prange Municipal Center Building site. The property is referred to as the former 73-1 sewerage treatment facility site.

The 2035 Land Use Plan Map 9.9 of the Village Comprehensive Plan indicates this property is located within the Governmental and Institutional land use designation and the non-impacted environmental areas are located within Primary Environmental Corridor, Other Open Space with wetlands and 100-year floodplain land use designations.

A refinement of the Land Use Plan is a Neighborhood Plan. Neighborhood Plans take into account the compatibility of existing and planned land uses, identifies how future land divisions and developments could occur, plans how access roadways to the land divisions should be provided and interconnected to existing roadways, examines the practicability of providing certain lot layouts, road layouts, parkways, open space areas, park areas, preservation areas, public community facilities, infrastructure improvements and municipal services to service the area. This property is located within the Green Hill Farms Neighborhood Plan area.

As recommended as part of the Implementation Element (Chapter 10 of the Village Comprehensive Plan), Neighborhood Plans shall be revised and updated to ensure that these detailed plans are consistent with this Comprehensive Plan. If there is a conflict between the a specific Neighborhood Plan and the Comprehensive Land Use Plan Map 9.9, the Comprehensive Plan Land Use Plan shall govern and the Neighborhood Plan shall be amended.

With that being said, the proposed Residential Recycling Center is allowed with a Conditional Use Permit in the I-1, District, which is consistent with the Comprehensive Land Use Plan; however the Green Hill Farms Neighborhood Plan needs to be amended. The Plan Commission approval of the Conditional Use Permit including Site and Operational Plans on May 9, 2016 was subject to the approval of the Neighborhood Plan Amendment being considered at the May 23, 2016 Plan Commission meeting.

The Neighborhood Plan removes a proposed public road extending east-west through the site at 8000 128th Street and places the property within the Governmental and Institutional land use designation and the non-impacted environmental areas are located within Primary Environmental Corridor, Other Open Space with wetlands and 100-year floodplain land use designations as shown on the 2035 Comprehensive Land Use Map. This change has no effect on the net density of the neighborhood.

Village staff recommends that the Plan Commission approve Plan Commission Resolution #16-07 and recommends that the Village Board approve the amendment to the Green Hill Farms Neighborhood Plan as presented at the May 23, 2016 Plan Commission meeting.

VILLAGE OF PLEASANT PRAIRIE PLAN COMMISSION
RESOLUTION #16-07
TO AMEND THE VILLAGE OF PLEASANT PRAIRIE, WISCONSIN
2035 COMPREHENSIVE PLAN

WHEREAS, on December 19, 2009 the Village Board adopted the *Village of Pleasant Prairie, Wisconsin 2035 Comprehensive Plan* (Comprehensive Plan); and

WHEREAS, the Comprehensive Land Use Plan sets forth the generalized land use designations of the Village; and

WHEREAS, the Village has received a request to amend a portion of the Green Hill Farms Neighborhood Plan related to the development of the property at 8000 128th Street for the Village's new Residential Recycling Center, located in U.S. Public Land Survey Section 33, Township 1 North, Range 22 East in the Village of Pleasant Prairie; and

WHEREAS, the 2035 Land Use Plan Map 9.9 of the Village Comprehensive Plan indicates this property is located within the Governmental and Institutional land use designation and the non-impacted environmental areas are located within Primary Environmental Corridor, Other Open Space with wetlands and 100-year floodplain land use designations; and

WHEREAS, a refinement of the Land Use Plan is a Neighborhood Plan. Neighborhood Plans take into account the compatibility of existing and planned land uses, identifies how future land divisions and developments could occur, plans how access roadways to the land divisions should be provided and interconnected to existing roadways, examines the practicability of providing certain lot layouts, road layouts, parkways, open space areas, park areas, preservation areas, public community facilities, infrastructure improvements and municipal services to service the area. This property is located within the Green Hill Farms Neighborhood Plan area; and

WHEREAS, as recommended as part of the Implementation Element (Chapter 10 of the Village Comprehensive Plan), Neighborhood Plans shall be revised and updated to ensure that these detailed plans are consistent with the Comprehensive Plan. If there is a conflict between a specific Neighborhood Plan and the Comprehensive Land Use Plan Map 9.9, the Comprehensive Plan Land Use Plan shall govern and the Neighborhood Plan shall be amended; and

WHEREAS, the amendment of the Green Hill Farms Neighborhood Plan 8 in Appendix 9-3 as shown and described in **Exhibit 1** removes a propose public road through the site at 8000 128th Street and places the property within the Governmental and Institutional land use designation and the non-impacted environmental areas are located within Primary Environmental Corridor, Other Open Space with wetlands and 100-year floodplain land use designations as shown on the 2035 Comprehensive Land Use Map. This change has no effect on the net density of the neighborhood; and

WHEREAS, on April 23, 2016 the required 30-day notice was published in the Kenosha News for the May 23, 2016 public hearing to be held by the Village Plan Commission and on April 21, 2016, notices were sent to property owners within 300 feet of the proposed Neighborhood Plan amended area; and

WHEREAS, on May 23, 2016 the Village Plan Commission held a public hearing to discuss the proposed amendments.

NOW THEREFORE, BE IT RESOLVED, that pursuant to Sections 62.23 (3) (b) and 66.1001 (4) (b) of the Wisconsin Statutes, the Village of Pleasant Prairie Plan Commission hereby approves the aforementioned amendments to the Village of Pleasant Prairie, Wisconsin 2035 Comprehensive Plan as presented at the May 23, 2016 public hearing.

BE IT FURTHER RESOLVED that the Plan Commission does hereby recommend that the Village Board enact the Ordinance adopting the amendment, as referenced above, to the *Village of Pleasant Prairie 2035 Comprehensive Plan*.

Adopted this 23rd day of May 2016.

VILLAGE OF PLEASANT PRAIRIE

ATTEST:

_____
Thomas W. Terwall
Plan Commission Chairman

_____
Michael Serpe
Vice Plan Commission Chairman

Date Posted: _____

CODE1604-001

EXHIBIT 1

Neighborhood Plan 8 of Appendix 9-3

Green Hill Farms Park Neighborhood

A Neighborhood Plan for Green Hills Farms Neighborhood has been prepared. Alternatives 2 and 4 were adopted by the Plan Commission on May 12, 2003 by Resolution #03-12 and the Village Board adopted a resolution of support on May 19, 2003 by Resolution #03-22. On _____, 2016 a portion of the Green Hill Farms Neighborhood Plan was amended by Ordinance #16-___ for a portion of the southcentral section of the Neighborhood as shown on Map 8-a.

When the Green Hill Farms Neighborhood Plan was adopted in 2003, the Neighborhood comprised of approximately 1,006 acres (or 43,821,360 square feet) and was generally bounded by 116th Street (CTH "ML") on the north, 128th Street (the Wisconsin-Illinois State Line) on the south, the Des Plaines River on the west and Green Bay Road (STH 31) on the east. The 2035 Comprehensive Plan changes the western boundary to the Canadian Pacific Railroad rather than the Des Plaines River.

The following outlines the proposed development within the Neighborhood Plans (Alternatives 2 and 4:

COMMERCIAL AREA: In both Neighborhood Plans, Alternatives 2 and 4, there are approximately 10 acres (1%) of land identified as commercial (excluding existing and future rights-of-way). The only commercial node within the neighborhood is located along the intersection of Springbrook Road and Green Bay Road (STH 31).

RESIDENTIAL AREA: In both Neighborhood Plans, Alternatives 2 and 4, there are approximately 50 acres (5%) of land (including existing and future rights-of-way), currently being used for Single-Family residential land use. Similarly, all four (4) Neighborhood Plan Alternatives depict an additional approximate 181 acres (18%) of future single-family residential land use. Therefore, a total of 231 acres (23%) of the Neighborhood are categorized with a residential land use.

Alternatives 2 and 4 depict the 55.3-acre Parkside Plaza LLC property, located at the southwest corner of 122nd Street and 88th Avenue (CTH "H") and further identified as Tax Parcel Number 92-4-122-324-0300-0, with a multi-family residential land use designation. A developer has shown interest in purchasing this land and constructing and a 105-unit condominium development. Therefore, Alternatives 2 and 4 depict approximately 55 acres (5.5%) of the Neighborhood (including existing and future rights-of-way and wetlands) for Multi-Family Residential land use. In Alternatives 2 and 4, approximately 24% of the 231 acres of land shown as appropriate for residential land uses is designated as multiple-family, while the remaining 76% of the 231 acres is shown as appropriate for single-family residential land uses.

In accordance with the Village 2010 Comprehensive Plan, the overall net density for the Green Hill Farms Neighborhood recommends that the residential portion of the Neighborhood be developed within the Lower Medium Density Residential category in that the average net density of the neighborhood shall be between 12,000 and 18,999 square feet per dwelling unit. This allows for areas of the neighborhood to have larger lots while some areas have smaller lots - however all new single family lots within the neighborhood are proposed to be a minimum of 15,000 square feet. The gross density (including rights-of-way, wetlands, 100-year floodplain, etc.) of the neighborhood as shown on the Alternative 2 is 50,565 square feet per dwelling unit (231 residential acres multiplied by 43,560 square feet in area and divided by 199 dwelling units). This density is well below the density allowed by the Village Comprehensive Plan (i.e. the neighborhood is less dense than required by the Comprehensive Land Use Plan).

The gross density (excluding rights-of-way, wetlands, 100-year floodplain, etc.) of the neighborhood as shown on the Alternatives 4 is 33,766 square feet per dwelling unit (231 residential acres multiplied by 43,560 square feet in area and divided by 298 dwelling units). Again, even with the possible proposed 105 multiple-family condominium units, this density is well below the density allowed by the Village Comprehensive Plan (i.e. the neighborhood is less dense than required by the Comprehensive Land Use Plan).

LIGHT MANUFACTURING AREA: In both Neighborhood Plans, Alternative 2 and 4, there is approximately 141 acres (14%) of land identified as industrial land use (excluding existing and future rights-of-way). This industrial area is generally located along the south side of Springbrook Road (CTH "ML"), north of and including the WE Energies (WEPCo) power line easement, east of 88th Avenue (CTH "H") and west of the Union Pacific Railroad. In general, the industrial portion of the Neighborhood extends approximately 1,450 feet south of Springbrook Road (CTH "ML"), to the southern extent of the WE Energies (WEPCo) power line easement.

PUBLIC (GOVERNMENTAL & INSTITUTIONAL AREA): In both Neighborhood Plans, Alternative 2 and 4, there is approximately 1 acre (0.1%) of land identified as public (governmental & institutional) area, which is identified as the existing Springbrook Cemetery, located along the southwest side of angled portion of Springbrook Road. Ordinance #16-____ amends both alternatives to add approximately 22 acres of land within this land use designation for the Residential Recycling Center on the property located at 8000 128th Street.

URBAN RESERVE AREA: In both Neighborhood Plans, Alternative 2 and 4, the entire Neighborhood not located within areas with environmental constraints (i.e. wetlands, 100-year floodplain, shorelands, environmental corridors, isolated natural resource areas), are located within an Urban Reserve Area as defined by the 2010 Comprehensive Plan as areas not proposed to be developed until after 2010; however, if the property owners wish to develop their land within the reserve area prior to 2010, then the 2010 Comprehensive Plan shall be amended to remove the reserve designation.

OPEN SPACE: In both Neighborhood Plans, Alternative 2 and 4, there is approximately the same amount of the land area shown as open space. Specifically, Alternative 2 depicts 583 acres (58%) in open space and Alternative 4 depicts 604 acres (60%) in open space.

Both Neighborhood Plans, Alternative 2 and 4 depict significant preservation of open space, which includes wetlands, 100-year floodplain, shorelands, environmental corridors and isolated natural resource areas. The Comprehensive Plan identifies that a neighborhood park be centrally located within the Neighborhood. Both Neighborhood Plans, Alternative 2 and 4 depict a neighborhood park located just south of the WE Energies (WEPCo) power line easement, approximately half way between 88th Avenue and the Union Pacific Railroad.

FLOODPLAIN AREAS: The Neighborhood contains a significant amount of land within the 100-year floodplain associated with the Des Plaines River and its tributaries. Prior to consideration of any proposed Conceptual Plans, floodplains within the portion of the Neighborhood area where the proposed Conceptual Plan area is located shall be field verified in accordance with the Village floodplain regulations. Development in the floodplain is restricted to open spaces that do not interrupt the natural flow of the water. Any development that constricts the flow of water or significantly reduces floodplain storage volumes may create upstream and/or downstream flooding problems or reduce the capacity of the floodplain to store water. In some instances property can be removed from the floodplain provided proper approval is obtained from the Village and several other agencies including the Wisconsin Department of Natural Resources (DNR) and the Federal Emergency Management Agency (FEMA). Any area removed from the floodplain through the placement of fill must be contiguous to (next to) land lying outside the floodplain. In addition, the volume of floodplain removal must be created in the vicinity of the filled area on a one-to-one basis. The land that is removed from the floodplain must be filled to an elevation at least two (2) feet above the elevation of the 100-year flood elevation.

WETLAND AREAS: Similar to the floodplains, the Neighborhood contains a significant amount of land within wetlands. Prior to consideration of any proposed Conceptual Plans, wetlands within the Neighborhood area where the proposed Conceptual Plan area is located shall be field verified by a certified biologist in accordance with the Village wetland regulations. Some of the wetlands within the Neighborhood have been previously field verified.

STORMWATER RETENTION AREAS: As with any development in the Village, when considering any proposed Conceptual Plans and development plans, stormwater facilities need to be provided within the development to manage the stormwater. At the time that any Conceptual Plans are to

be considered for any portion of the Neighborhood, the developer's engineer will be required to evaluate the development site, based on actual field conditions and shall present a storm water management facility plan which meets the Village requirements for Village review.

ACCESS TO LOCAL ARTERIAL AND NON-ARTERIAL ROADS: In both Neighborhood Plans, Alternative 2 and 4 indicate two (2) new street access points to 88th Avenue (CTH H); one (1) new access point to Green Bay Road (STH 31) and two (2) new access points to 128th Street (State Line Road). All of these roads are not under the jurisdiction of the Village. Any future road openings to CTH ML (Springbrook Road) or CTH H (88th Avenue) shall be reviewed and approved by Kenosha County. Any future road openings to STH 31 (Green Bay Road) shall be reviewed and approved by the Wisconsin Department of Transportation. Any future road openings to 128th Street (State Line Road) shall be reviewed and approved by Lake County, Illinois. At the time that any portion of the Neighborhood is proposed to be developed, proper access and permits will be required to adequately service the proposed development. Alternatives 2 and 4 depict CTH ML (122nd Street) as terminating west of the wetlands, shoreland, 100-year floodplain and Union Pacific railway, thus there would be no connection of 122nd Street eastward to STH 31 (Green Bay Road).

POPULATION PROJECTIONS FOR THE NEIGHBORHOOD: This neighborhood will not develop until the current property owners wish to develop their land; however, neighborhood planning is essential for the orderly growth of the community and establishes a framework as to how development should occur and, if and when it should occur. Neighborhood Plans are a guide for property owners and developers; therefore, the population will increase on an incremental basis as the Neighborhood develops over time. [Note: Based on 2000 United States Census information for the Village of Pleasant Prairie, the average number of persons per household is 2.73 and school age children between the ages of 5 and 19 make up 23% of the population.]

Current population within the neighborhood:

- 47 dwelling units (assumes that each existing lot has an occupied dwelling unit.)
- 128 persons, of which 29 are school-aged children.

Projected populations within the neighborhood based on the number of households proposed for this neighborhood when fully developed:

- Alternative 2 - 530 persons (194 existing and proposed single-family dwellings), of which 122 are school-aged children.
- Alternatives 4 -816 persons within 299 dwelling units (194 existing and proposed single-family dwellings and 105 proposed multi-family condominium dwellings), of which 187 are school aged children.

Neighborhood Plan Map 8
Green Hill Farms (Alternative 2)
Adopted by Plan Commission Resolution #03-12 and Village Board Resolution #03-22

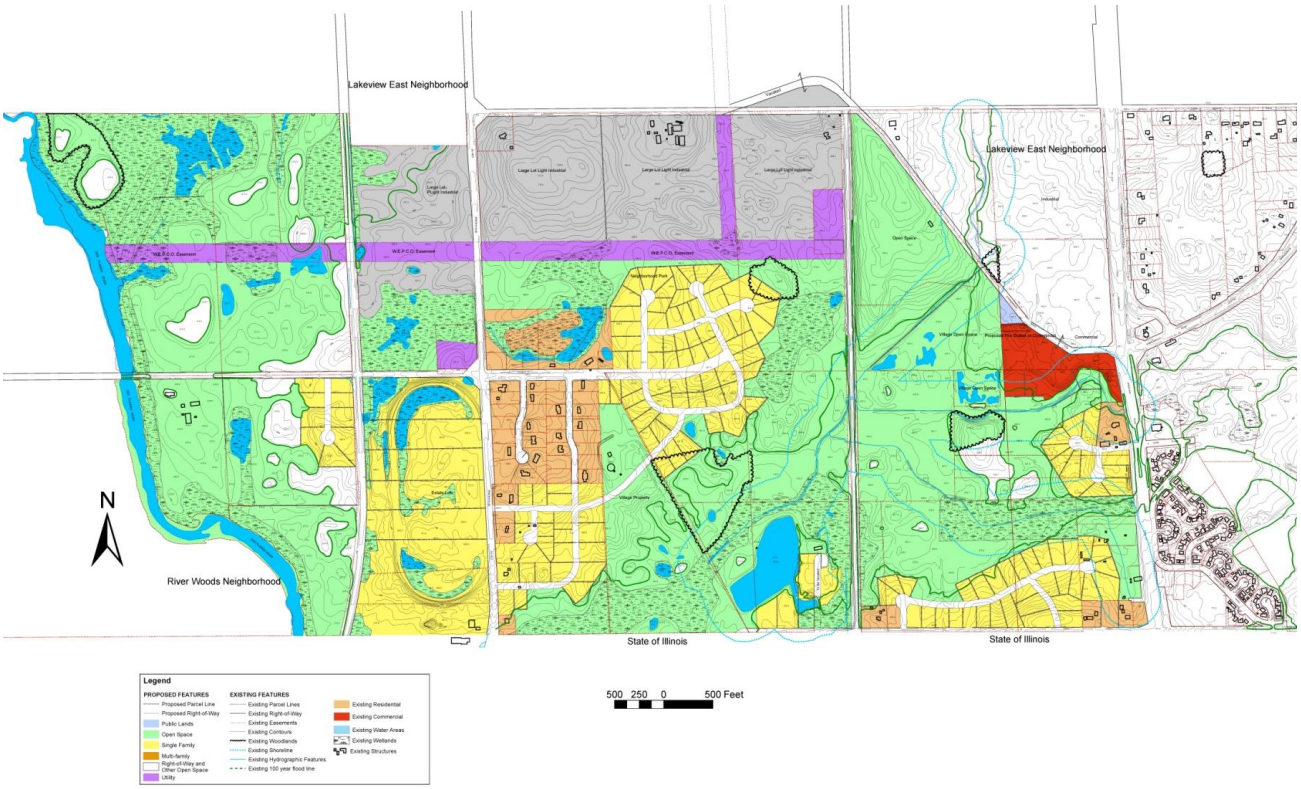

Neighborhood Plan Map 8
Green Hill Farms (Alternative 4)
Adopted by Plan Commission Resolution #03-12 and Village Board Resolution #03-22

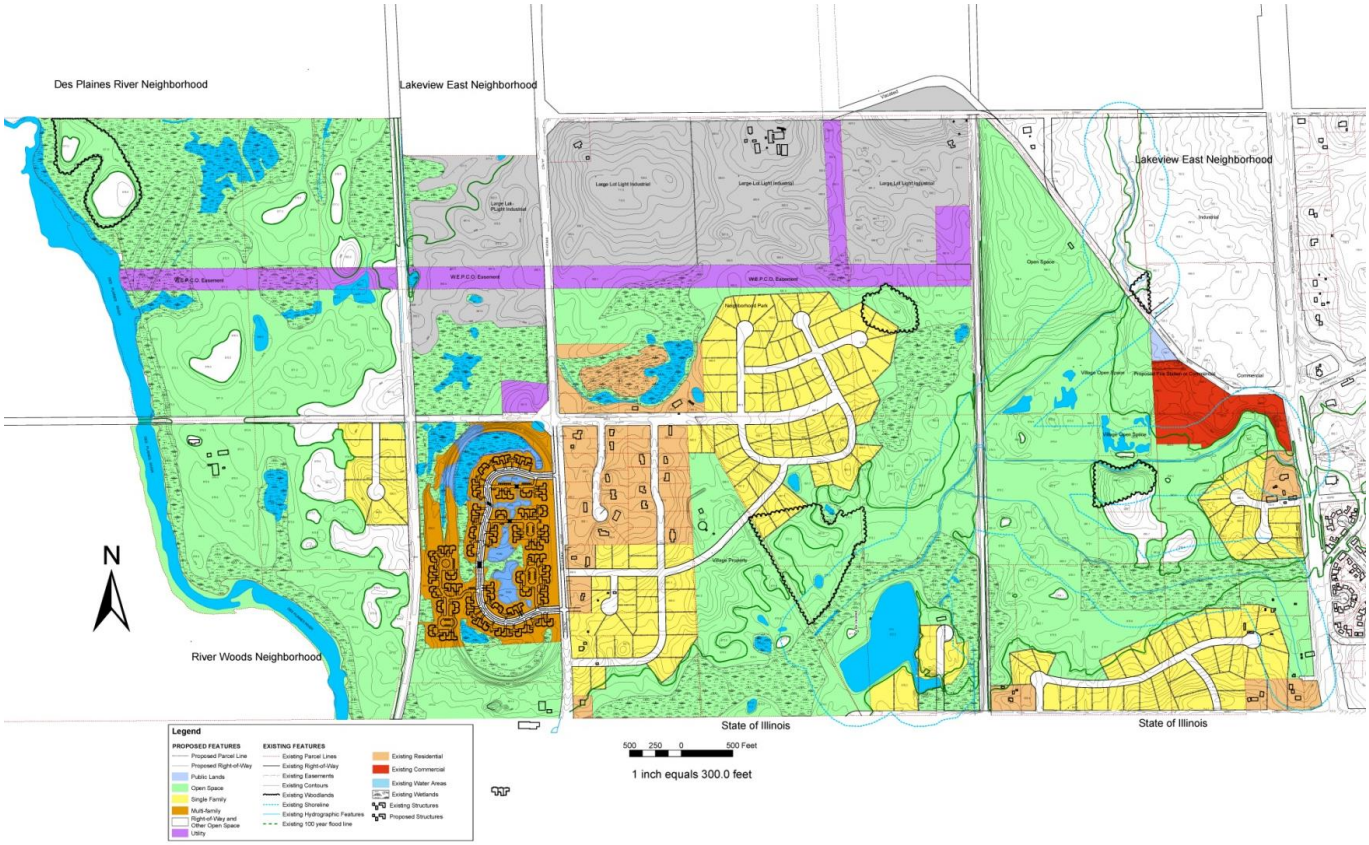

Neighborhood Plan Map 8-a
Green Hill Farms (Amendment)
Amendment adopted by Plan Commission Resolution #16-07 and Ord. #16-___

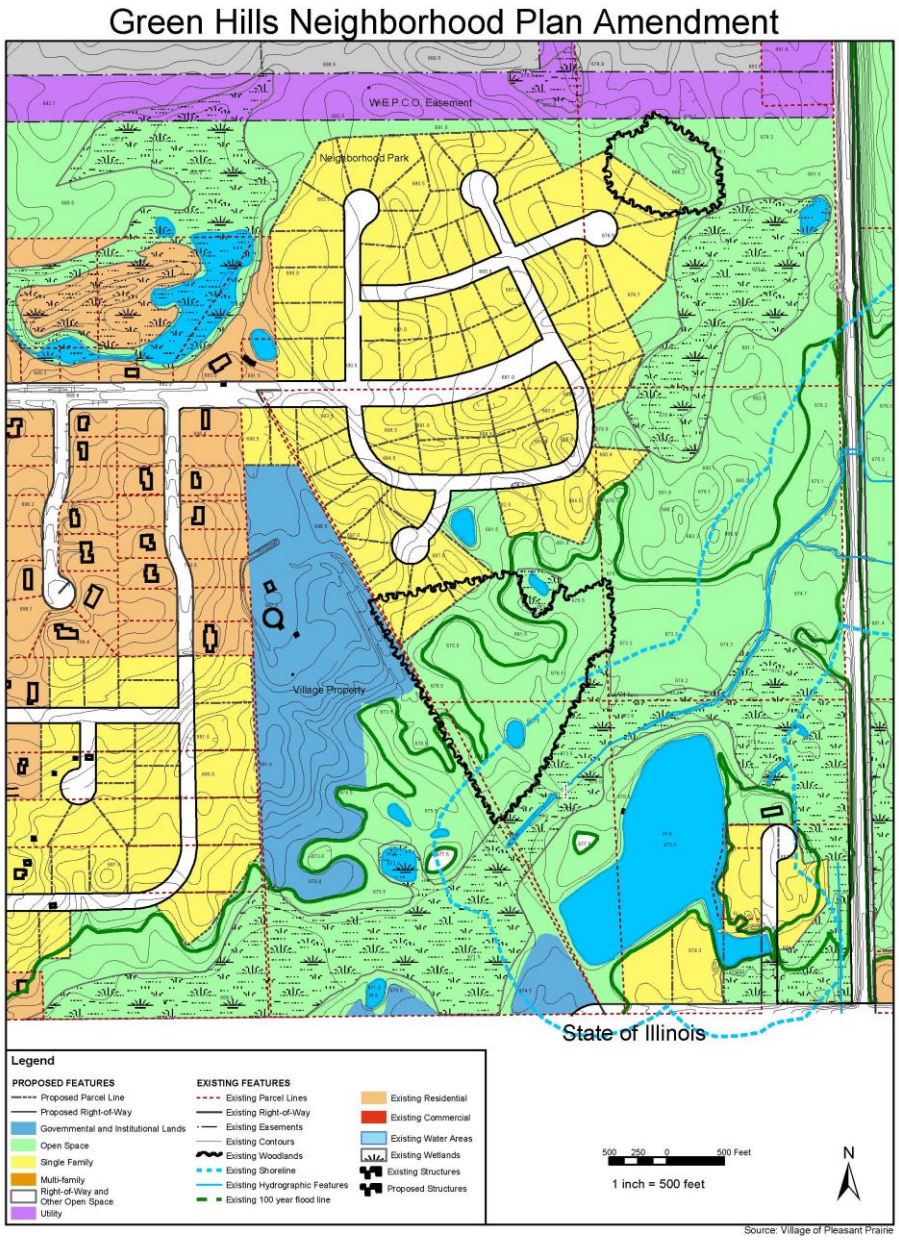

Filed _____ 20__ Published _____ 20__

Public Hearing _____ 20__

Fee Paid _____ 20__ Approved _____ 20__

Notices Mailed _____ 20__ Denied _____ 20__

VILLAGE OF PLEASANT PRAIRIE, WISCONSIN
COMPREHENSIVE PLAN AMENDMENT APPLICATION

To: Village Plan Commission & Village Board of Trustees of the Village of Pleasant Prairie:

I, (We), the undersigned owner(s)/agent do hereby petition the Village Board to amend the Village of Pleasant Prairie Comprehensive Plan as hereinafter requested and affecting the property located at 8000 128th St and

Tax Parcel Number 92-4-122-333-0800.

Check all that apply

☐ Land Use Plan Amendment: To change the land use designation from the _____ land use designation

to the _____ land use designation.

☒ Neighborhood Plan Amendment for the Green Hill Farms Neighborhood

☐ Other Amendment to the Comprehensive Plan (specify) _____

Petitioner's interest in the requested amendment: this will be the site for the Residential Recycling Center for the Village

I (We), have contacted the Community Development Department to arrange a pre-application meeting to discuss the proposed request to determine additional information that may be needed for this request.

I, (We), hereby certify that all the above statements and attachments submitted herewith are true and correct to the best of my knowledge.

***PROPERTY OWNER:** Sanitary District #31

Print Name: John Steinberniotz

Signature: [signature]

Address: 8000 128th St

Pl. Pr WI 53158

(City) (State) (Zip)

Phone: _____

Fax: _____

Email: _____

Date _____

***OWNER'S AGENT:**

Print Name: John Steinberniotz

Signature: [signature]

Address: 8600 Green Bay Rd

PL PR WI 53158

(City) (State) (Zip)

Phone: _____

Fax: _____

Email: _____

Date: _____

Green Hills Neighborhood Plan Amendment

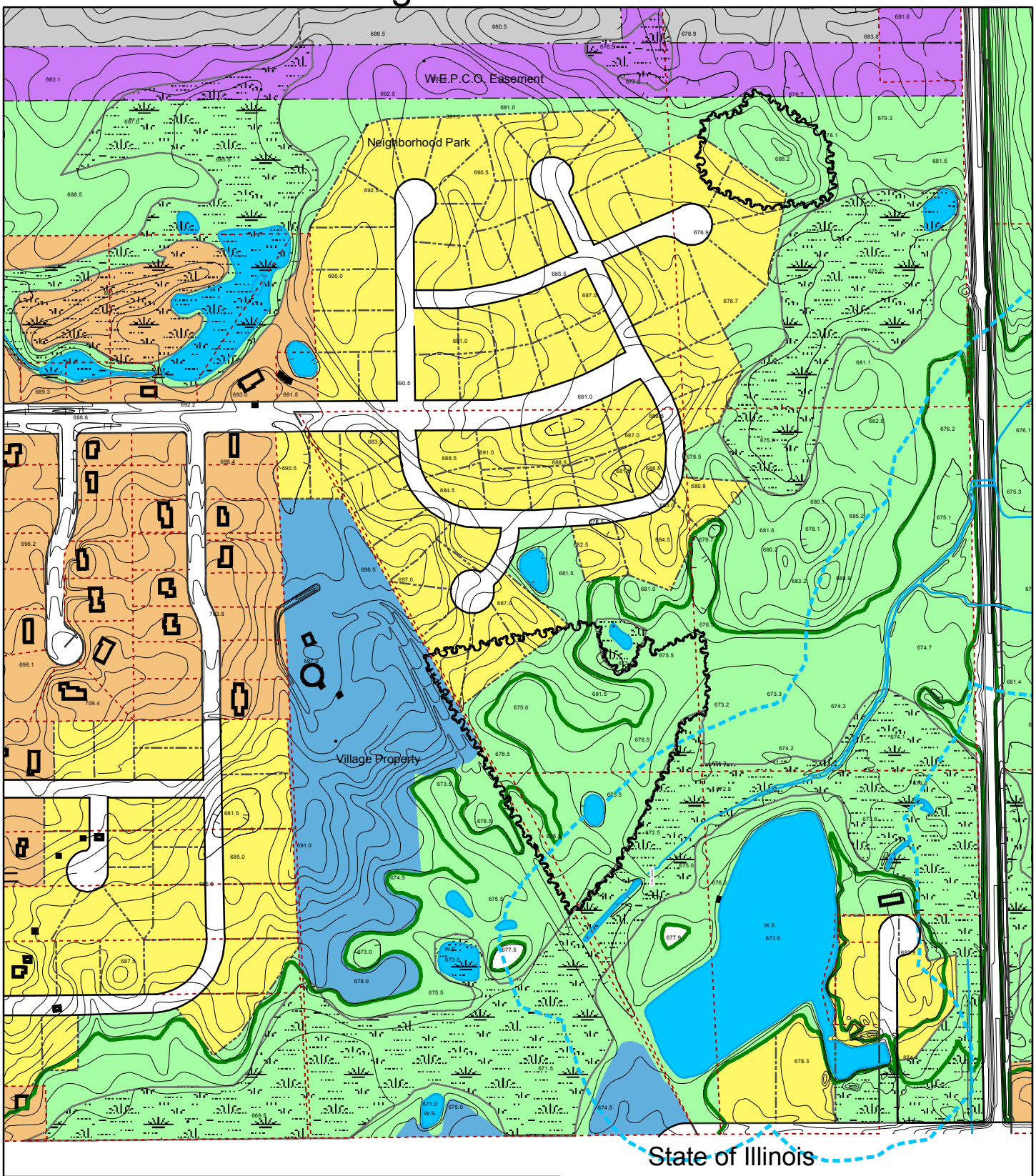

Legend

PROPOSED FEATURES
- Proposed Parcel Line
- Proposed Right-of-Way
- Governmental and Institutional Lands
- Open Space
- Single Family
- Multi-family
- Right-of-Way and Other Open Space
- Utility

EXISTING FEATURES
- Existing Parcel Lines
- Existing Right-of-Way
- Existing Easements
- Existing Contours
- Existing Woodlands
- Existing Shoreline
- Existing Hydrographic Features
- Existing 100 year flood line
- Existing Residential
- Existing Commercial
- Existing Water Areas
- Existing Wetlands
- Existing Structures
- Proposed Structures

500 250 0 500 Feet

1 inch = 500 feet

N

Source: Village of Pleasant Prairie

THESE ITEMS ARE RELATED AND WILL BE DISCUSSED AT THE SAME TIME HOWEVER SEPARATE ACTION IS REQUIRED.

E. Consider the request of John Burroughs of Majestic Realty Co., for approval of **Final Site and Operational Plans** for the construction of a 424,164 square foot speculative industrial building on the vacant land located on the east side of 88th Avenue about ¼ mile south of Bain Station Road.

Recommendation: Village staff recommends that the Plan Commission approve the Site and Operational Plans subject to the comments and conditions of the Village Staff Report of April 25, 2016.

F. Consider the request of John Burroughs of Majestic Realty Co., for approval of a **Certified Survey Map** to subdivide the property located on the east side of 88th Avenue about ¼ mile south of Bain Station Road into two (2) parcels for industrial development.

Recommendation: Village staff recommends that the Plan Commission send a favorable recommendation to the Village Board to approve the **Development Agreement and related plans** subject to the comments and conditions of the Village Staff Report of April 25, 2016.

DEV1604-012
DEV1604-013

VILLAGE STAFF REPORT OF MAY 23, 2016

Consider the request of John Burroughs of Majestic Realty Co., for approval of **Final Site and Operational Plans** for the construction of a 424,164 square foot speculative industrial building on the vacant land located on the east side of 88th Avenue about ¼ mile south of Bain Station Road.

Consider the request of John Burroughs of Majestic Realty Co., for approval of a **Certified Survey Map** to subdivide the property located on the east side of 88th Avenue about ¼ mile south of Bain Station Road into two (2) parcels for industrial development.

THESE ITEMS ARE RELATED AND WILL BE DISCUSSED AT THE SAME TIME HOWEVER SEPARATE ACTION IS REQUIRED.

The Village has been working with the developer for the past several years and to date the following approvals have been obtained for the development of the ***Majestic Badger Logistics Center*** *site:*

1. On October 15, 2012 the Village of Pleasant Prairie Board of Trustees approved the following requests related to the development of the property generally located south of Bain Station Road on the east side of 88th Avenue (Tax Parcel Number 92-4-122-162-0301) in the Village.
   - **Village Comprehensive Plan** (Ord. #12-33 was approved by the Village Board on October 15, 2012) to amend the Village of Pleasant Prairie 2035 Comprehensive Land Use Plan Map 9.9 and to amend a portion of the Pleasant Farms Neighborhood Plan.
   - **Conceptual Plan** was conditionally approved by the Village Board on October 15, 2012 for the development of the originally proposed 1.2 million square foot warehouse/distribution facility building known as the Majestic Center.
   - **Zoning Map Amendments** (Ord. #12-34 was approved by the Village Board on October 15, 2012) to rezone a portion of the property that was zoned A-2, General Agricultural District into the M-2, General Manufacturing District. Portions of the property within the 100-year floodplain that were zoned FPO, Floodplain Overlay District and C-1, Lowland Resource Conservancy District remained unchanged. [*Note: Upon the completion of detailed wetland field delineation and the 100-year floodplain field survey (including floodplain boundary adjustments) additional amendments to the 2035 Comprehensive Land Use Plan and Zoning Map would be required.]*
2. **Floodplain Boundary Adjustment** was conditionally approved by the Plan Commission on April 8, 2013 but has not yet been considered by the Village Board since the plans need to be modified and approval from the WI DNR is still pending. The floodplain boundary adjustment proposes to remove approximately 98,173 cubic feet of floodplain and to create approximately 99,144 cubic feet of floodplain to compensate for the floodplain being filled. [*Note: This work has commenced and will be completed this year-2016.*]
3. **Site and Operational Plans** were conditionally approved by the Plan Commission on May 13, 2013, for the construction of a 1,180,480 square foot warehouse/distribution building on the property. [*Note: Several extensions to this approval were granted by the Plan Commission; however, at this time the petitioner is requesting to build a smaller building on the northern portion of the property.]*

4. **Zoning Map Amendment (Ord. #13-18)** and **Zoning Text Amendment (PUD Ord. #13-19)** were approved by the Village Board on May 20, 2013. The Zoning Map Amendment rezoned the property to include a PUD, Planned Unit Development Overlay District. The existing M-2, General Manufacturing District, C-1, Lowland Resource Conservancy District and FPO, Floodplain Overlay District remained unchanged. The Zoning Text Amendment (**attached**) created the specific PUD requirements for this property.
5. **Preliminary Site and Operational Plan** was approved by the Plan Commission on April 25, 2016 to begin the development of the northern portion of the property for a 424,164 square foot building and associated on-site public and private improvements, along with off-site County Trunk Highway (CTH) H public improvements.
6. **Development Agreement** was approved by the Village Board on May 2, 2016 for the public improvements within CTH H (88th Avenue) for this project.

At this time, the petitioner is requesting to obtain **Final Site and Operational Plans** approval to begin the development of the northern portion of the property for the construction of a 424,164 square foot building and associated on-site and off-site improvements. In addition, the petitioner is requesting approval of the **Certified Survey Map** to subdivide the property into two (2) parcels. The 424,164 square foot building will be constructed on the northern portion of the site or on Lot 1 of the proposed CSM. The petitioner is tentatively planning to construct a second building on Lot 2 in the future.

FINAL SITE AND OPERATIONAL PLANS: The Site and Operational Plans will allow the petitioner to construct a 424,164 square foot speculative industrial building on the vacant land located on the east side of 88th Avenue about ¼ mile south of Bain Station Road on Lot 1. The building has been designed so that it can be easily divided into as many as four (4) tenant spaces. The building design is a "cross dock" facility with trailer storage as shown on the plans. The design provides for "secured" truck courts in the event that future tenants require that feature.

At this time there is no identified user for this speculative building. As information, any tenant that proposes to use/occupy 50% or more of this speculative building will require Site and Operational Plan approval from the Plan Commission. Also, depending on the use proposed, a Conditional Use Permit in addition to the Site and Operational Plan approval from the Plan Commission may be required.

Building Setbacks: The M-2, General Manufacturing District requires that the building meet the following minimum setback requirements:

- Street setback: minimum of 65 feet from CTH H (88th Avenue).
- Side and rear setbacks: 45 feet minimum.
- Shore setback: 75 feet minimum from the OHWM of Jerome Creek.
- Wetland setback: 25 feet from the wetlands on the property.
- There is no setback to the 100-year floodplain; however no structures shall be located within the 100-year floodplain.

Setback for parking areas (which includes parking spaces, maneuvering lanes and fire lanes) as measured from the back of curb shall meet the following minimum requirements:

- Industrial area parking setback: 90 feet minimum to the future residential lot area in the northeast corner of the site (per the Planned Unit Development, PUD Overlay discussed below).

- A minimum of 20 feet from the front CTH H right-of-way.
- A minimum of 20 feet from other private roadways and drives to the side and rear lot lines with the exception to the east property line wherein a zero setback is proposed (per the PUD Overlay discussed below).
- A minimum of 90 feet from the north property line at the northeast end abutting future residential development (per the PUD Overlay discussed below).
- In addition, parking areas shall not be located within any easements unless express written approval is allowed by the easement holder.

The M-2 District requires that at minimum of 25% of the site be open space, which the site provides.

A Traffic Impact Analysis (TIA) has been prepared by the Developer's Consultant and was reviewed by the Village and Kenosha County. A copy of the Consultant's recommendations indicates that both deceleration/acceleration lanes and a by-pass lane shall be installed on CTH H by the Majestic. Based upon the traffic study completed, Majestic's shall also provide a cost contribution for the nearby future Bain Station / CTH H intersection improvements (round-about) is $163,500.00. These improvements are anticipated to be constructed in 2017 by Kenosha County. This amount is payable by Majestic Realty Co. to the Village as a condition precedent to the issuance of a building permit, which funds will be transferred to Kenosha County.

Employee, client and visitor vehicular and truck access to the site will be from a main driveway from CTH H (88th Avenue). All parking areas and maneuvering lanes, fire lanes including the truck court, shall be improved with concrete vertical curb and gutter. The plan identifies 292 automobile parking spaces (including 12 handicapped accessible spaces) and 111 trailer spaces. The truck courts and trailers are planned to face north and south on the site.

Pursuant to the Village Zoning Ordinance the minimum on-site parking spaces for a manufacturing use would require five (5) spaces, plus one (1) space per employee on the largest shift and the required number of handicapped accessible parking spaces pursuant to the State Code. The minimum on-site parking spaces for a warehouse/distribution center is based on one (1) space for every two (2) employees during any 12-hour period plus the required number of handicapped accessible parking spaces pursuant to the State Code. At the time that the proposed tenant use(s) and number of employees are known, adequate on-site parking shall be identified and provided. While the final number of required parking spaces will be determined based on the actual tenant(s), the number of parking spaces being provided anticipates the higher parking space requirements of the uses.

The development will be served by municipal sanitary sewer and water. Public water is located within 88th Avenue and public sanitary sewer is located within an existing Sanitary Sewer Easement previously granted to the Village on the site. (Note: The Sanitary Sewer Easement is being widened and being provided by the petitioner on the CSM to maintenance access and Vactor equipment turnaround purposes). The location of the parking areas, fire lanes and maneuvering lanes may be allowed over the Sanitary Sewer Easement subject to certain conditions as noted on the CSM. Fourteen foot wide gravel maintenance access pathways are being installed over the public sanitary sewer main.

A total of 16 public street lights shall be installed within the CTH H right-of-way. The owner is also obligated to pay for the ongoing utility facility and maintenance related charges for the street lights. The Village (Sandro Perez/John Steinbrink Jr.) will coordinate activities with the Owner's engineer for the preparation of detailed CTH H public street lighting, including the street lighting electrical service distribution plans, specifications and their installation and inspection.

In the executed Development Agreement the Owner is obligated and has agreed to construct the Required Public Improvements pursuant to the Village approved Plans including: installing a by-pass lane, acceleration and deceleration lanes, gravel shoulders, pavement markings, traffic signage, and 88th Avenue related road repairs; installing storm sewer improvements; making hydrant and valve adjustments; making sanitary manhole adjustments and installing a new sanitary manhole (located on the east side of the property just east of the parking lot); installing public street trees; installing public street lights and related appurtenances; and installing 14' wide gravel sanitary sewer maintenance paths.

Construction

A pre-construction staff/contractor/owner meeting for the Majestic project was held on May 5, 2016 pursuant to the approvals of the preliminary site and operational plans, the development agreement and required public improvements, and the conditional approvals of the erosion control, WI DNR NOI and mass grading plans. The ribbon cutting ceremony was held on May 5, 2016. Following the Village's conditional approvals of the Final Site and Operational Plans and related comments/conditions, receiving State approved plans, and issuance of Building Permits, the construction of the building and other site work will commence in June. Majestic anticipates that the building/site work would be completed by December 31, 2016.

CERTIFIED SURVEY MAP (CSM): The CSM subdivides the property into two parcels, dedicates additional right-of-way (60 feet from centerline) of CTH H as required by Kenosha County, and sets forth Dedication and Easement Provisions and Restrictive Covenants. Lot 1 is proposed to be 29.13 acres with over 600 feet of frontage on CTH H and Lot 2 is proposed to be 58.37 acres with over 2,000 feet of frontage on CTH H.

Wetlands

The wetlands, as field delineated on the site in 2008 by Wetland and Waterway Consulting and as approved by the WI DNR on December 19, 2008, are shown on the CSM within a **Dedicated Wetland Preservation and Protection, Access and Maintenance Easement.**

Shoreland/Floodplains

Jerome Creek is located adjacent to the property. This Creek has been determined to be a navigable waterway. The location of the Ordinary High Water Mark (OHWM) shall be field identified by the WI DNR and shown on the plans and the CSM. The Plans show the location of the 75 foot OHWM shore yard setback and the 300 foot shoreland jurisdictional area. The property owner has obtained the Village's Stipulated Shoreland Permit for the grading within 75 feet of the OHWM.

The location of the 100-year floodplain associated with Jerome Creek was field delineated pursuant to the DFIRM Map panel 191D dated June 19, 2012 and the associated table for the Jerome Creek which identifies the 100-year floodplain elevations. As noted above, the Floodplain Boundary Adjustment was conditionally approved by the Village, WI DNR and FEMA. The floodplain boundary adjustment will remove approximately 98,173 cubic feet of floodplain and to create approximately 99,144 cubic feet of floodplain to compensate for the floodplain being filled. The 100-year floodplain area after the amendment is already shown on the CSM as located within a **Dedicated Floodplain Preservation and Protection, Access and Maintenance Easement** area. As noted above, the 100-year floodplain grading work will be finalized in 2016. Upon its completion, the petitioner shall file for a Village Zoning Map and Text Amendment will be required to reflect the floodplain boundary adjustment.

Woodlands

A tree survey has been completed along the north property lines and these wooded areas shall be protected and preserved during and after building/site construction. The woodland areas to be

protected are shown on the CSM as located within a **Dedicated Woodland Preservation and Protection, Access and Maintenance Easement**. The grading and berming along the north property line east and south of the cemetery shall also be constructed in a manner to protect the drip line of the trees.

Item E Recommendation: Village staff recommends conditional approval of the Final Site and Operational Plans subject to compliance with the above comments and the following conditions:

1. The Final Site and Operational Plans have been reviewed for conformance with generally accepted engineering practices and Village policies. Although the data has been reviewed, the design engineer is responsible for the thoroughness and accuracy of plans and supplemental data and for their compliance with all State and local codes, ordinances, and procedures. Modifications to the plans, etc. may be required should errors or changed conditions be found at a future date and detailed engineering plans are prepared and reviewed. **The following changes shall be made to the plans and three (3) revised paper copies and one electronic copy of the Preliminary Site and Operational Plans with a written description of how each of the comments below have been addressed shall be submitted for final staff review:**

    a. Compliance with the ***attached*** memo dated May 16, 2016 from the Public Works Department. Revise the plans as noted and provide the written varication as requeste.

    b. Revised Electrical Plan is required. The Lighting Plan shall show the location of the property boundaries to ensure that the lighting meets the following required pursuant to Section 420-57 I (2) (c) of the Village Zoning Ordinance which states *"The maximum allowable light spillover to an adjacent residential property shall be 0.5 foot candle measured at the property line, four feet above grade; for all other adjacent uses, the maximum allowable light spillover shall be 0.75 average foot candle, measured in the same manner."*

    c. Note on Plans - All site signage, including HC parking signage shall have decorative black poles – no green/gray u-channel poles. Each handicapped parking space shall be appropriately signed and painted on the pavement pursuant to ADA requirements.

    d. Note on Plans per the Police Department -- all exterior entrance/exits are marked numerically starting at the front main entrance of the building and moving clockwise around the structure. Numbers should be on the inside and outside of the exits. A site plan map shown the door and numbering sequence shall be provided to the Village.

    e. Note on Plans - The Village staff (Sandro Perez/John Steinbrink Jr.) will coordinate activities (at the Owner's cost) with the Owner's engineer for the preparation of detailed CTH H public street lighting, including the street lighting electrical service distribution plans, specifications, lighting locations, contractor installation and inspection.

    f. Note on Landscaping Plans –. Coordinate with Village staff (Jesse Houle/John Steinbrink Jr.) to confirm the precise planting location of the CTH H public street trees. The tree locations shall be staked, inspected by Public Works and approved prior to the planting of the trees.

    g. Note on the Landscaping Plans where snow is going to be pushed/placed at the far north east corner of the parking lot. The snow cannot be pushed up against the evergreen trees as they will get severely damaged from the snow piles and the

snow breaking branches. If the intent is to keep the piles in the parking lot or to push them to a different area – show on plans.

h. Landscaping Plan Concern – A no mow grass mix is not acceptable in the street yard of the site as it will not provide a finished appearance to the site and is rarely properly maintained by the land owners. The front of the site abutting CTH H (street yard) and adjacent to the building shall be fine turf (mowed weekly, fertilized and weed control) not no mow grasses.

If no mow is permitted elsewhere on the site (the Village will have high expectations as to the maintenance practices for these areas. If the no mow areas are not managed properly they will slowly return to invasive non desirable weed species and weed complaints with code enforcement issues. As such, with the exception of the street yard areas which shall be turf, the land owner shall provide assurances to the Village that the no mow areas will be properly maintained.

Provide a revised Landscape Plan sheet which more clearly identifies the no mow areas- outside of the CTH H street yard.

2. Compliance with the ***attached*** memo dated May 13, 2016 from the Village Fire & Rescue Department. [*Note: Fire sprinkler plans and all fire alarm installation plans are required to be submitted to, and reviewed by the Village Fire & Rescue Department and their Fire Safety Consultant (This is a typically a 30 day process and requires separate plan submittal and fees payable to the Fire & Rescue Department).]*

3. Compliance with the ***attached*** memo dated May 18, 2016 from the Village Building Inspection Department.

4. **Upon approval of the revised Final Site and Operational Plans, and prior to the issuance of the required building permits, the following shall be submitted (paper copies and pdf copies):**

a. As required in the above noted Fire & Rescue Department's memo, a Fire Compliance letter shall be prepared by the owner and submitted to the Fire & Rescue Department. This letter, on company's letterhead, shall state that the Majestic project will comply with all requirements stated within the Fire & Rescue Department's Memorandum dated May 13, 2016. A copy of this letter shall also be provided to the Community Development Department.

b. The Commercial building permit application with the State approved plans/approval letter.

c. The Transportation Improvement Fee for the future Bain Station / CTH H intersection improvements (round-about) of $163,500.00 shall be paid prior to the issuance of the Village building permit.

d. Prior to the full building permit being issued, a pre-construction meeting shall be scheduled (coordinate date and time with Jean Werbie-Harris when the full building permit application is submitted). **The pre-construction agenda, updated listing of emergency contacts, and updated construction schedule shall be handed out by the Design Engineer of Record to all attendees (15 people?) at the meeting. The pre-construction meeting shall be moderated and minutes shall be taken by the Design Engineer of Record and the minutes emailed/distributed within 7 days.**

5. Other Comments and Requirements:

a. Compliance with the Erosion Control Permit EC1605-001 and the Early Footing and Foundation Permit COM1605-004 already issued by the Village.

b. Impact fees shall be paid prior to or at the time of the issuance of the building permit pursuant to Chapter 181 of the Village Code (Based upon $1.94 per $1,000 of valuation as determined by the Village Assessing Department).

c. The Transportation Improvement Fee for the future Bain Station / CTH H intersection improvements (round-about) of $163,500.00 shall be paid to the Village prior to or at the time of the issuance of the Village building permit.

d. Municipal connection fees shall be paid prior to the issuance of the permit for the connection to the sanitary sewer system.

e. Exterior building downspouts/gutters building be internal to the building and shall not be visible on the building.

f. No roof mounted vents or HVAC units shall be visible to the public's view. All ground mounted HVAC or transformer units shall be screened by rooflines.

g. All signage shall comply with requirements of Article X of Chapter 420 of the Village Municipal Code.

h. The hours of construction activity, operating heavy machinery or equipment associated with the grading, erosion control device installation, and overall site development shall be limited to Monday through Friday from 6:00 a.m. to 10:00 p.m. and Saturday and Sunday from 6:00 a.m. to 6:00 p.m. Requests for additional hours shall be approved by the Village.

i. There shall be no construction parking permitted on 88th Avenue (CTH H). On-site (off-street) gravel parking areas shall be designed to accommodate all construction related workers and site visitors.

j. Installation of "Construction Entrance" or "Truck Entrance Ahead " signage shall be coordinated with Gary Sipsma of Kenosha County at Majestic' s cost prior to building permit issuance.

k. The Village (Sandro Perez/John Steinbrink Jr.) will coordinate activities with the Owner's engineer for the preparation of detailed CTH H public street lighting, including the street lighting electrical service distribution plans, specifications and their installation and inspection.

l. **As a condition of verbal to occupancy of the building shell the following inspections and information are required**:

i. Verification that the site and building were built in compliance with the approved Site and Operational and State approved Building plans.

ii. Verification and compliance with all Building and Fire & Rescue approved plans, comments and concerns.

iii. Verification that each handicapped parking space shall be appropriately signed and painted on the pavement pursuant to ADA requirements. (All site signage, including HC parking signage shall have decorative black poles – no green/gray u-channel poles).

iv. Per the Police Department verification that all exterior entrance/exits are marked numerically starting at the front main entrance of the building and

moving clockwise around the structure. Numbers should be on the inside and outside of the exits. A site plan map shown the door and numbering sequence shall be provided to the Village.

v. Record Drawings and As-Built data shall be provided to the Village Engineering Department in accordance with Chapter 405 (Section 4.0) of the Municipal Code.

vi. All required landscaping shall be installed. A written letter of verification and certification shall be provided to the Village by the landscape designer that all site (including street trees and their related maintenance), building foundation and signage landscaping has been installed in accordance with the approved landscape plan prior to the issuance of a verbal occupancy for the first tenant. However, if weather conditions prevent installation of all or portions of the landscape materials, the developer, owner or occupant shall enter into a written agreement with the Village that specifies the date by which all approved landscaping shall be completed and grants the Village a temporary easement to complete the landscaping if not timely completed and shall deposit with the Village a cash deposit, an irrevocable letter of credit, performance bond or other financial assurance approved by the Zoning Administrator to ensure timely completion of all required landscaping; the amount of the financial assurance shall be equal to 110% of the contracted amount (Landscaper's written contract estimate of unfinished work) to complete the landscaping improvements in order to reasonably compensate the Village for the cost of completion of any landscaping improvements not completed within the specified time.

vii. All required pubic improvements shall be completed, Village inspected and approved.

viii. All required site signage shall be installed. A written letter of verification and certification shall be provided to the Village by the signage installer that all building and site signage has been installed in accordance with the approved signage plan prior to the issuance of a verbal occupancy for the first tenant. (Reminder that the full building address (and tenant names) shall be legibly shown on the Primary Monument Sign).

ix. A paper copy and a pdf of an as-built plan stamped by a Wisconsin Registered Land Surveyor shall be submitted to the Village to verify that required building, above ground structures and all impervious surfaces meet the minimum setbacks and that all pavement markings were marked per the approved site plans and the grading of the site was completed pursuant to the approved plans.

m. All public improvements as set forth in the executed Development Agreement shall be installed, inspected and approved by the Village. (See attached Agreement).

n. All Village fees incurred by the Community Development Department, Village Engineering Department and/or expert Assistants required by the Village throughout the development process are being billed directly to Majestic. All outstanding bills/fees shall be paid prior to verbal occupancy and other fees incurred following occupancy shall be paid in a timely manner.

o. No use shall be conducted in such a way as to constitute a public or private nuisance or to violate any of the performance standards set out in Section 420-38 of the Village Zoning Ordinance.

p. This development shall be in compliance with the Village Land Division and Development Control Ordinance, Village Municipal and Zoning Codes, Village Construction Site Maintenance and Erosion Control Ordinance, Kenosha County Ordinances and the State of Wisconsin Statutes.

Item F Recommendation: Village staff recommends that the Plan Commission send a favorable recommendation to the Village Board to approve the Certified Survey Map subject to above comments and the following conditions:

1. The changes as shown on the attached CSM shall be made and the CSM shall be resubmitted to the Village Staff for final review prior to executing and recording at the Kenosha County Register of Deeds Office.
2. Any outstanding taxes or special assessments shall be paid prior to recording the CSM. Pursuant to the Village records there are not outstanding taxes however the Transportation Improvement Fee for the future Bain Station / CTH H intersection improvements (round-about) of $163,500.00 shall be paid prior to the issuance of the building permit.
3. The CSM shall be finalized, executed and recorded at the Kenosha County Register of Deeds Office and a recorded copy of the CSM shall be provided to the Village within 30 days of Village Board's approval and prior to issuance of building permit.
4. The CSM shall be recorded prior to issuance of the required building permit.

Office of the Director of Public Works
John Steinbrink Jr., P.E.

TO: Peggy Herrick, Assistant Planner / Assistant Zoning Administrator

FROM: John Steinbrink, Jr., P.E., Director of Public Works

CC: Matthew Fineour, P.E., Village Engineer
Jean Werbie-Harris, Community Development Director

SUBJ: DEV1604-012 Majestic Center Plan Review

DATE: May 16, 2016

The Department of Public Works has reviewed the submitted information for the above referenced project. Based on our review, we have the following comments listed below:

PAGE#	COMMENT
General	WE-Energies owns the East part of that field. Need verification from WE-Energies that they will not be leasing the field. **STILL NEED IN WRITING. I need a written verification that the property to the East will not need access. I believe it was verbally communicated, however, for record, we need written follow up-an email is fine.**
34	Sheet 34 in final plan set still shows "Proposed ROW" with leader…I believe it was just missed and should have been deleted. **Please confirm**.

Office of the
Chief of Fire & Rescue
Doug McElmury

VILLAGE STAFF MEMORANDUM

TO:	Jean Werbie-Harris, Community Development Director
FROM:	Doug McElmury, Chief Fire & Rescue
CC:	Craig Roepke, Deputy Chief Fire & Rescue
	Lt. Thomas Clark, Fire & Rescue Department
	Peggy Herrick, Assistant Planner, Community Development
SUBJECT:	Fire Department review of Site and Operational Plans for Majestic Spec Building
DATE:	May 13, 2016

These are initial comments for the Preliminary Site and Operational Plans received for the Majestic Spec Building to be located at 8801 88th Ave. in Pleasant Prairie.

The Fire and Rescue Department will be responsible for providing fire prevention inspections of this facility, twice annually. Based on the limited information and conceptual plans submitted, the Fire & Rescue Department have the following comments regarding the site:

Distribution of Comments: the person who obtains the building permit to all contractors and subcontractors affected by this document shall distribute copies of these comments. This document outlines critical times and deadlines. All recipients of this document must become familiar with the contents.

Compliance: A letter shall be submitted to the Fire & Rescue Department prior to receiving a building permit, stating that the project will comply with all requirements addressed within this document.

Conflicts: In the event a conflict in code(s) is identified, or a conflict with the insurance carrier criteria occurs, the more stringent shall apply. In the event this conflicts with any codes adopted by the State of Wisconsin, the owner must petition the State directly for a variance. The Owner must demonstrate that they will provide materials or design equivalent to the code or that they will exceed the code when petitioning the State of Wisconsin and/or the Village of Pleasant Prairie where applicable.

Fire Safety System Plans: such as fire sprinkler and fire alarm plans, will need to be submitted to the State of Wisconsin Department of Safety and Professional Services and also to this fire department for review. No installation of any fire protection system is allowed until a satisfactory review is obtained from both departments.

Pre-Construction Meeting: A pre-construction meeting shall take place with the general contractor, the fire protection contractor, the Fire and Rescue Department and any other sub-contractor prior to the installation of any underground fire protection. The purpose of this meeting is to assure that the requirements of the State of Wisconsin that only a Wisconsin licensed sprinkler fitter shall perform the installation of all devices, etc. All parties will be asked to initial this document and or permit. Any violation of the installing requirements will be reported in writing to the State of Wisconsin Department of Safety and Professional Services.

1. **Site Access:** Access shall be provided around the perimeter of the site for all Fire Department apparatus, and must comply with the State of Wisconsin and the International Building Code, 2009 edition. A minimum wall-to-wall turning radius of 45'-0" shall be allowed for apparatus movement.
    a. All entrances from public streets, as well as road and driveways around the proposed building must be a minimum of 30 feet wide.
    b. All exterior exit pathways as well as access to the Fire Pump room shall have a hard surface, leading to a hard surface.
    c. An exterior personnel door shall be located in close proximity to each fire sprinkler riser.
    d. There shall be Knox padlocks or Knox key switches on all gates on site. The Fire & Rescue Department will review the proper placement and operation of the Knox system locks with the owner/tenants.
2. **Required Licenses:** A Wisconsin licensed fire protection contractor and Wisconsin licensed sprinkler fitters must install underground fire mains and aboveground fire protection. Periodic inspections of the job site will be made by fire inspectors to assure compliance.
3. **Insurance Carrier:** The Owner of this project shall submit to the insurance carrier for review the plans for both underground water distribution and fire protection prior to construction. The Fire & Rescue Department shall receive a copy of the comments when plans are submitted for review.
4. **Review and Comments:** At such time more information is provided for this project, the Fire Department will review and comment on the following areas outlined below.

    A. Site and Operational Permits
        1. Site accessibility (Plans provided do not specific clearances or distances)
        2. Fire Pump Location
        3. Pumper Pad
        4. Fire hydrant spacing

    B. Conditional Use and Operational
        1. Standpipe outlet locations .
        2. Fire alarm pull stations
        3. Emergency and Exit Lighting
        4. Fire extinguishers
5. **Plan Review, Permits and Fees:** The plans for the fire protection underground, aboveground and fire alarm system shall be submitted for review a minimum of four (4) weeks before installation is scheduled to begin. The Village will use an independent fire safety consultant for review of all fire protection plans submitted. A satisfactory review must be completed before any permits will be issued and before construction can begin.
6. **Permit fees:** must be paid at time of submission for review. Work cannot begin until all permits have been issued. A typical review turnaround is four weeks

    The following fees and permits are generated directly from the Fire & Rescue Department.

    a. Bulk water Usage
    b. Fire Protection Plans for Underground and Aboveground
    c. Fire Alarm System Plans
    d. Kitchen Hood Systems Plans

    NOTE: Permits are required from the Fire & Rescue Department for the installation of water main in addition to any permits required by other Village of Pleasant Prairie Departments.
7. **Occupancy:** All fire and life safety requirements must be in place prior to any building being occupied.
8. **Hazardous Occupancies**: Should there be identified hazard occupancies with this project, the Fire & Rescue Department will need more than the typical four week time period to review potential Hazardous Occupancies. The owner must contact the Fire & Rescue Department as soon as possible to begin the review process.
9. **Exterior Doors:** All outside doors must have access to the interior. Such as a lock and handle provided at each door.

10. **AED:** Because of the overall building size and occupancy type, the owner shall install one or more public access Automatic External Defibrillator (AED) onsite for employee and public use in the event of a sudden cardiac arrest. The Fire and Rescue Department can provide the training necessary to perform CPR and to operate the AED.

11. **Storage:** Maximum height, width and aisle ways and egress pathways must be maintained and will be enforced. The same concerns apply to the storage of quantities of combustibles (plastics and cardboard) and other storage of flammable liquids or chemicals must also be properly identified, placarded and stored.

12. **Elevators:** must comply with Village of Pleasant Prairie Ordinance 180-20, including acceptable minimum size and emergency notification.

13. **Severe Weather Shelter:** The architect shall identify the area within the building that can be used as a "severe weather shelter" or "safe haven" during severe weather such as a tornado. That area will be identified with signage.

14. **On Premise Secure Key System:** Knox Company Rapid Entry System, "Knox Boxes" shall be provided for the building. A determination of the exact number required will need to be made during the pre-construction meeting. One by each riser door, fire pump room and other needed access routes. The Knox Boxes shall be Model 4400. Two sets of all keys (Master, fire alarm pull station, annunciator, elevator, etc.) shall be placed within the box, as well as a copy of the pre-fire plan.

15. **MSDS Storage Box:** A minimum of one (1) Brady model JS1 designed for Material Safety Data Sheet storage shall be provided for each tenant to contain the data sheets on all products that are considered hazardous within the facility. The MSDS Box(s) shall be installed within the Fire Pump Room.

16. **Fire Extinguishers:** Shall meet NFPA 10 (Portable Fire Extinguishers) for the specific use of the building and be in sufficient number. Final approval, of fire extinguisher locations and quantity, will not be given until occupancy is taken, to see how a tenant furnishes the space. The company providing the fire extinguishers shall submit a letter to the Fire and Rescue Department stating the locations and size of the extinguishers are in compliance with NFPA 10.

17. **Emergency and Exit Lighting:** Exit and Emergency Lighting shall be provided and shall have battery backup. Combination units are acceptable and recommended. An Emergency Generator eliminates the need for battery backup. Exit and Emergency Lighting shall not be placed on electrical circuits that cannot be disturbed or interrupted, this is for test purposes. These circuits shall be clearly labeled. An Emergency light shall be placed within the fire pump room.

18. **Sprinkler System:** The building shall be equipped with an "automatic fire sprinkler system". The systems shall be designed and constructed to the current printed edition of NFPA 13, Automatic Fire Sprinklers and the Village of Pleasant Prairie Ordinance 180-16, Automatic Fire Sprinklers. Confirm NFPA edition with the Fire Department prior to system design.

19. **The following information must be submitted with the sprinkler plans for review:**

    Building height:
    Number of stories/floors:
    Mezzanines:
    Elevators:
    Hazard class:
    Commodity Class:
    Exterior storage:
    Fire protection:

20. **Plan Review (Underground):** A review of the underground drawings is required along with the fire protection drawings before a permit will be issued by the Fire and Rescue Department. Underground plans shall be submitted a minimum of four (4) weeks before installation begins.

21. **Water Service:** If it is determined that the building will be serviced by a combination municipal water and fire protection main, that main must be sized by the fire protection (sprinkler) contractor. No main is allowed to travel underground, under the building.

22. **Fire Hydrants:** The fire hydrants shall meet the Village of Pleasant Prairie hydrant specification including the 5" storz connection. Fire hydrants shall be spaced no more than 350 feet apart around the perimeter of the building, per Village Ordinance 180-16. The insurance carrier must agree in writing to the hydrant spacing. As many hydrants as possible shall be supplied directly by municipal water. The distance from the finished grade line to the lowest discharge shall be no less than 18 inches and no more than 23 inches. The Fire Department connections shall be located, and of sufficient height where typical snow fall or snow removal operations will not obstruct access.

23. **Fire Hydrant Acceptance**: This project will include the installation of water mains for domestic and fire protection use. Prior to the fire sprinkler system connection to any new water mains (including water mains, fire hydrants, laterals leading to the building and risers) must be hydrostatically tested flushed according to National Fire Protection Association (NFPA–National Fire Code) Standard 24 and witnessed by the Fire Chief and or the Chief's representative, the installing contractor and the fire sprinkler contractor at a minimum.

24. **Fire hydrant / water main flushing:** can be disruptive to the job site and requires significant coordination of all sub-contractors by the General Contractor. Nonetheless flushing is an essential part of assuring public safety. The General Contractor is highly encouraged to coordinate the flushing of all new water mains, fire hydrants, laterals leading to the building and risers with both the sub-contractors responsible, the Village of Pleasant Prairie Engineering Department, Fire & Rescue Department and the Water Utility Department, prior to seeking a 'clean water sample' on this site.
NOTE: The Fire Protection Designer must meet with the Fire and Rescue Department before the underground drawings are submitted for review to finalize the placement of the hydrants.

25. **Pumper Pad:** There shall be dedicated space for a fire engine to have unobstructed access to the Pumper Pad. Both the Fire Department Sprinkler connection and the fire hydrant shall be installed remote from the building and located a minimum distance from the building equal to the highest wall. The fire hydrant shall be located no more than five (5) feet from the roadway and the Fire Department sprinkler connection shall be placed no more than five (5) feet from the fire hydrant. The Fire Department connection shall be constructed along with an underground drain with access for inspection. Both the fire department sprinkler connection and the fire hydrant, (pumper pad), shall be installed remote from the building(s) and located a minimum distance from the building equal to the highest wall.

    NOTE: *The Fire Department Connection riser shall include a single five (5) inch Storz fitting.*

26. **Fire Pump:** Should a fire pump be required based on the design, There shall be sufficient room to maneuver within the fire pump room. There shall be direct ingress/egress from the fire pump room directly to the exterior of the building; a paved surface shall lead to the fire pump room. There shall be Emergency Lighting installed within the Fire Pump Room. The pump test header location shall comply with 180-16. There shall also be sufficient room for placement of the Fire Alarm Control Panel (FACP), along with the required maps of the fire protection systems.

27. **Standpipes:** In lieu of 1.5 inch hose stations, the building shall be equipped with standpipes that shall consist of 2-½ inch NST valve, capable of delivering 250 GPM, at 75 PSI measured at the standpipe valve. The standpipes shall be wet and placed adjacent to all exterior exit doors, same side as the door handle/knob. Village Ordinance 180.16 G.

28. **Strobe Light:** A strobe light shall be provided for each riser and installed vertically above each sprinkler water flow bell. The strobe light shall operate for a sprinkler water flow. The lens color shall be RED. The strobe light shall meet Village specifications as found in section 180-16 K of the Sprinkler Ordinance. A strobe light(s) shall also be provided outside of the fire pump/riser room to indicate a fire pump run and/or a waterflow alarm, with signage installed under each strobe light.

29. **Bollards:** Shall be placed near fire hydrants, remote post indicator valves (PIV) and Fire Department connection(s) to prevent damage. Bollards shall be 6 inches in diameter. Bollards shall not obstruct charged fire hoses. It is recommended that the Fire Department approve the location of the bollard(s) before final placement is made.

30. **Fire Alarm System: The system shall be fully addressable so that detailed information will be received about the device in alarm.** Utilizing a fire pull station, sprinkler water flow, or any other fire detection device that maybe installed in this building shall activate the internal fire alarm system. The systems shall be designed and constructed to the current printed edition of NFPA 72. Confirm NFPA edition with the Fire Department prior to system design

    a. **Manual Fire Alarm Pull Stations:** Shall be located at a minimum, immediately adjacent to each exterior door. Any additional exterior doors will be required to meet this requirement. The pull station shall not be placed in the area of the door, but immediately adjacent to the door jamb.

    b. **Pull Stations and Audiovisual Alarms:** Shall be installed per ADA requirements.

    c. **Smoke and Heat Detection:** Shall be installed as required.

    d. **Tamper Switches:** Tamper switches shall be placed on all sprinkler valves and be identified on the annunciator panel.

    e. **Duct Detectors:** Duct detectors shall be programmed as a Supervisory Alarm, not as a fire alarm.

    f. **Fire Alarm Control Panel (FACP): Shall be addressable.** The main FACP will be placed in the fire pump room. Remote annunciator panel location(s) will also need to be determined during the pre-construction meeting. The annunciator panel type shall be approved by the Fire & Rescue Department. The panel shall identify a fire sprinkler water flow by riser, and the specific locations of the fire alarm pull stations and any other fire detection devices that may be installed in this building.

    g. **Fire Alarm Plans Location:** There shall be a designated location for a set of as-built fire alarm plans near the FACP per NFPA 72.

    h. **FACP Nomenclature:** Confirmation of nomenclature shall be discussed between the Fire Department and the fire alarm program technician prior to any inspections.

    i. **Annunciator Panel: Shall be addressable.** The annunciator panel type shall be approved by the Fire and Rescue Department. The panel shall identify a fire sprinkler water flow by riser, and the specific locations of the fire alarm pull stations and any other fire detection devices that may be installed in this building.

    j. **Transmission of Fire Alarms.** The method of transmission to central station must be approved by the Fire & Rescue Department. i.e. RF Radio, cellular, VOIP, or other approved technologies.

    k. **FACP Main Panel:** There will be one main fire alarm panel within a building. The system will not be split into two or multiple fire alarm panels interconnected together. (Example: West wing is one panel, East wing is a different panel)

    l. **Central Station:** The Fire Alarm Control Panel shall transmit all fire alarm, tamper, trouble and supervisory signals to a central station that is certified by Underwriters Laboratories (UL) and/or Factory Mutual (FM) and approved by the Fire & Rescue Department. The owner shall provide such documentation for approval. It is recommended that the owner consult with the Fire & Rescue Department prior to signing any contracts with the Central station.

Fire:	Pleasant Prairie Fire & Rescue
Medical:	Pleasant Prairie Fire & Rescue
Phone numbers	
Emergency:	**(262) 694-1402**
Non-emergency:	(262) 694-7105
Business:	(262) 694-8027

31. **All Hazards Notification System:** Should the owner or tenant plan on the installation of an in-building all hazards notification system (fire, weather, active threat, etc), the fire department must be made aware and the system must meet all NFPA 72 requirements.

32. **Public Safety Radio Coverage**: Provide for adequate radio coverage to public safety service workers, including but not limited to firefighters, and law enforcement officers. For purpose of this section, adequate radio coverage shall include all of the following:

a) The system must support both the Fire Department's and Police Department's main VHF repeated radio channels.
b) a minimum signal strength of -101 dBm available in 95% of the area of each floor of the building when transmitted from the Public Safety Radio Communications System: and
c) a minimum signal strength of -101 dBm received at the Public Safety Radio Communications System when transmitted from 95% of the area of each floor of the building, via portable radio with public safety microphone.
d) Channel Performance Criterion (CPC): CPC is the minimum performance level in a faded channel, per TSB-88, clause 4.2. TSB-88 is a "Telecommunications Systems Bulletin" published by the TIA, Telecommunications Industry Association. The performance level is rated using "Delivered Audio Quality". Industry standard DAQ definitions are shown in Table 1.
e) DAQ level of three (3) is the minimum performance level which shall be attainable by public safety radio systems in 95% of the area of each floor of a building, via portable radio with public safety microphone

Table 1 - Delivered Audio Quality Definitions

DAQ Delivered Audio Quality	Subjective Performance Description
1	Unusable, speech present but unreadable.
2	Understandable with considerable effort. Frequent repetition due to noise / distortion.
3	Speech understandable with slight effort. Occasional repetition required due to noise / distortion.
3.5	Speech understandable with repetition only rarely required. Some noise / distortion.
4	Speech easily understood. Occasional noise / distortion.
4.5	Speech easily understood. Infrequent noise / distortion.
5	Speech easily understood.

Testing Procedures:

a. Initial Tests. Public safety employees or their designees will perform initial tests. A certificate of occupancy shall not be issued to any new structure if the building fails to comply with this section.
b. Annual Tests. Fire Department personnel in conjunction with inspection procedures will conduct annual tests.

Amplification Systems Allowed

Buildings and structures which cannot independently support the required level of radio coverage shall be equipped with any of the following in order to achieve the required adequate radio coverage; a radiating cable system or an internal multiple antenna system with or without FCC typed-accepted signal booster amplifiers as needed. If any part of the installed system or systems contains electrically powered components, the system shall be capable of operating on an independent battery and/or generator system for a period of at least twelve (12) hours without external power input. Any battery system employed shall automatically recharge in the presence of an external power input.

The installation of equipment as indicated above cannot be detrimental to the operation of the Public Safety Radio system. In the event that a signal booster is employed, it shall be fully encased within a dust and water resistant case.

Field Testing

Fire Department personnel, after providing reasonable notice to the owner or their representative, shall have the right to enter onto the property to conduct field-testing to be certain the required level of radio coverage is present.

33. **Final Inspection:** The General Contractor shall provide the following documentation at the time the Final Inspection takes place and before a building occupancy certificate will be issued.

    a. The fire protection contractor shall provide the owner with a letter (upon completion of the sprinkler work) stating the sprinkler system, or portion thereof, is "100% operational and built according to the design", Village Ordinance, 180-16 N.

    b. The fire alarm contractor shall provide the owner with a letter (upon completion of the fire alarm work) stating the fire alarm system, or portion thereof, is "100% operational and built according to the design"

    c. Copy of contract with fire alarm central monitoring station.

    d. Copy of UL and/or FM certificate(s) for the fire alarm central monitoring station.

    e. Copies of the fire protection underground flushing documents.

    f. Copies of the underground and fire sprinkler hydrostatic test certificates.

    g. Copies of the fire sprinkler operational test certificates.

    h. Copies of the fire alarm test documents.

    i. Copies of other test documents such as, hood/duct, smoke, etc…

    j. The Pleasant Prairie Fire and Rescue Department shall have all information needed for our pre-fire plan prior to occupancy.

    k. Provide two- (2) CD's, one for the property owner and one for the Fire & Rescue Department. The disks shall include all Floor plans and fire protection plans for the building in an as-built condition.

    l. Maps of the fire alarm and fire sprinkler system shall be placed in the fire pump room, near the fire alarm control panel; the maps shall be hung on the wall, with a waterproof covering and accessible to firefighters wearing bulky clothes and equipment.

    m. AED is in place at such time a tenant takes occupancy.

    n. A copy of the tenants Emergency Plan must be submitted to the Fire & Rescue Department before occupancy.

Office of the Building Inspection Superintendent
Sandro Perez

Village Staff Memorandum

To: Jean Werbie-Harris, Community Development Director

From: Sandro Perez, Building Inspection Superintendent

Subject: Majestic

Date: May 18, 2016

---

1. Building Inspection Department information:
   Hours: Mon-Fri, 8am-5pm.
   Phone# 262-694-9304
   Email: buildinginspection@plprairiewi.com

2. Permit applications can be found online at pleasantprairieonline.com.

3. Inspections are performed Mon- Fri 9am-4pm except electrical inspections; those are only Tue & Thu mornings. 48hr notice is required to schedule an inspection. Please note you must call and speak with a Building Inspection Department representative a voicemail or email will not constitute an inspection please plan accordingly. Final occupancy inspections require coordination with multiple departments and staff members there for a minimum of 72 hour notice is required. Any re-inspection fees due must be paid prior to scheduling a re-inspection.

4. All contractors requiring permits shall not commence work until permit issuance (including low voltage contractors). We have 10 business days to review and issue permits please plan accordingly. If there are any questions on which contractors need a permit please contact Building Inspection Department.

5. Electrical plans are no longer reviewed by the State, however the Building Inspection Department will require a complete set of electrical plans prior to issuance of electrical permit. Please submit emergency egress lighting plan with photometrics and energy compliance worksheets form SBD 10512 to Building Inspection Department prior to issuance of Electrical Permit.

6. Combination water mains will need Fire Department plan approval prior to issuance of Exterior Plumbing Permit. Contact Chief Dough McElmury at 262-694-5600 for submittal requirements. All underground inspections will be performed by the Building Inspection Department. All system function inspections will be performed by the Fire Department.

7. Fire alarm systems require plan review and approval prior to the Building Inspection department issuing a Low Voltage Permit. Inspections will be required by both the Fire Department and Building Inspection Department.

8. Erosion Control Standards must be adhered to at all times during construction. The Building Inspection Department will not perform any inspection if the erosion control measures are non-compliant.

9. Any tradesmen requiring state license will be "carded" on the jobsite for compliance.

10. We inspect to the 2009 IBC, IEBC, IMC, IECC, IFGC, 2003 ANSI A117.1, 2011 NEC and WI. Plumbing code SPS 381-386.

11. Keep jobsite clean and safe, inspectors will not perform inspection if there is a safety hazard in the area of their inspection.

12. A $50 re-inspection fee will be charged if you are not ready for your inspection.

13. All exterior lighting is recommended to be LED 5000K color temperature and "Dark Sky" compliant.

5-17-16 JWH

RECEIVED

MAY 03 2016

PLEASANT PRAIRIE

DRAFT

CERTIFIED SURVEY MAP NO. _____

Being a part of the Northeast 1/4, the Southwest 1/4 and the Northwest 1/4 of the Southwest 1/4 and the Southeast 1/4 and Southwest 1/4 of the Northwest 1/4, Section 16, Township 1 North, Range 22 East, Village of Pleasant Prairie, Kenosha County, Wisconsin.

WISCONSIN
JOHN P. KONOPACKI
S-2461
Waukesha, WI
LAND SURVEYOR

MAY 3, 2016

Bearings referenced to the Wisconsin State Plane Coordinate System, South Zone (N.A.D. 1927). The west line of the Southwest 1/4 of Section 16, Township 1 North, Range 22 East bears N02°46'43"W.

NORTH

GRAPHICAL SCALE (FEET)

0 — 1" = 300' — 600'

LEGEND:
- Denotes Found Iron Pipe
- Denotes Found 3/4" Iron Rebar
- Denotes Set 3/4" X 18" Iron Rebar, 1.5 LBS./FT.
- Denotes Sanitary Manhole
- Denotes High Tension Tower
- Denotes Wetland

VICINITY SKETCH
SCALE 1"=2000'

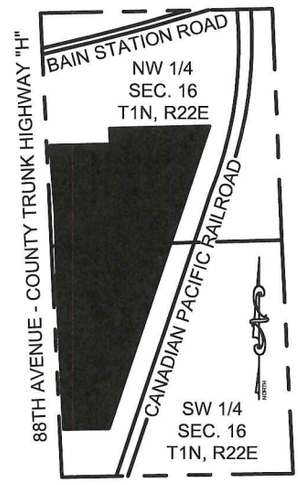

NW CORNER, NW 1/4
SEC. 16, T1N, R22E
(CONC. MON. W/ BRASS CAP)

WEST LINE OF THE NW 1/4
SEC. 16, T1N, R22E
N02°46'29"W 2655.68'

UNPLATTED LANDS
OWNER: PETER STEINBRINK II
TAX KEY: 92-4-122-162-0203

Prepared for:
Majestic Realty Co.
13191 Crossroads Parkway North - 6th Floor
City of Industry, CA 91746

NORTH LINE OF THE SW 1/4 OF THE NW 1/4
SEC. 16, T1N, R22E

CENTERLINE
JEROME CREEK DITCH

N88°32'16"E 1132.29'

20.0'

508.35'

1039.01'

93.28'

WETLAND

PAUPER'S CEMETERY PLAT NO. 8110
TAX KEY: 92-4-122-162-0100

N88°32'16"E 685.91'

665.97'

19.94'

300' SHORELAND
JURISDICTIONAL
AREA

N02°46'28"W
180.00'

N02°46'44"W 1323.05'

S32°43'17"W 670.21'

S18°09'30"W 3635.90'

EXISTING SANITARY
SEWER EASEMENT

30'

20.00'

S87°13'17"W
134.84'

DEDICATED PUBLIC STREET
88TH AVENUE - COUNTY
TRUNK HIGHWAY "H"
6,359 SQ. FT. (0.1460 ACRES)

COUNTY TRUNK HIGHWAY "H"
88TH AVENUE
(VARIABLE R.O.W.)

N04°33'50"W 800.66'

N02°46'29"W 637.84'

LOT 1
1,269,148 SQ. FT.
29.1356 ACRES

OHWM
EL.=678.08

UNPLATTED LANDS
OWNER: WIS. ELECTRIC POWER
CO. TAX KEY: 92-4-122-163-0115

S02°46'44"E 1323.16'

S02°46'43"E
450.96'

60.00'

L5

L4

OHWM EL.=675.52
(SEE NOTES ON SHEET 13)

BRIDGE

S87°13'17"W 1177.10'

L3

LOT 2

MATCH LINE - SHEET 1
1234.33'

30'

N02°46'44"W
241.45'

L1

L2

NW CORNER
SW 1/4 SEC. 16
T1N, R22E
(CONC. MON. W/
BRASS CAP)

SOUTH LINE OF THE NW 1/4 SEC. 16, T1N, R22E
N88°19'18"E 2616.72'
NORTH LINE OF THE SW 1/4 SEC. 16, T1N, R22E
1229.33'

MATCH LINE - SHEET 2

40'

50' 50' 100'

S02°46'44"E
234.82'

300' SHORELAND
JURISDICTIONAL AREA (Lot 2)

(Lot 1)

DRAINAGE
EASEMENT PER
DOC. 500985

Subject Property Zoning: A-2 General Agricultural District, M-2 General Manufacturing District, C-1 Lowland Resource Conservancy District, FPO-Floodplain Overlay District, ~~SO-Shoreland Overlay~~. Tax Key Number: 92-4-122-162-0301

Prepared By:
PINNACLE ENGINEERING GROUP
15850 BLUEMOUND ROAD | SUITE 210
BROOKFIELD, WI 53005
OFFICE: (262) 754-8888

- SEE SHEET 8 FOR BOUNDARY LINE TABLE.
- SEE SHEETS 9-12 FOR DEDICATION, PROVISIONS AND RESTRICTIVE COVENANTS.

This instrument drafted by John P. Konopacki, PLS-License No. S-2461

PEG JOB#117.00WI
SHEET 1 OF 15

Jurisdictional Boundary area

CERTIFIED SURVEY MAP NO. _____

Being a part of the Northeast 1/4, the Southwest 1/4 and the Northwest 1/4 of the Southwest 1/4 and the Southeast 1/4 and Southwest 1/4 of the Northwest 1/4, Section 16, Township 1 North, Range 22 East, Village of Pleasant Prairie, Kenosha County, Wisconsin.

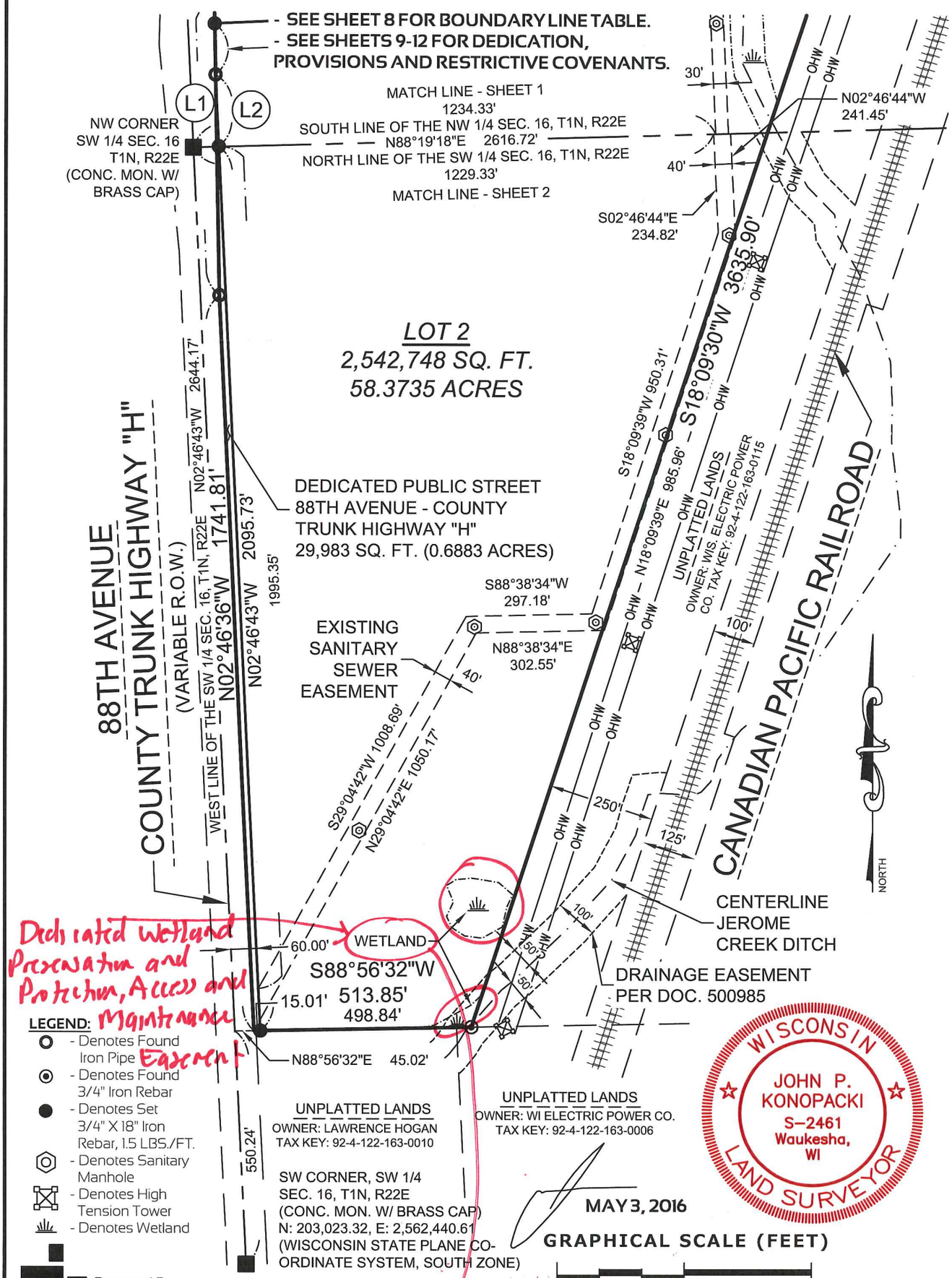

Dedicated Wetland Preservation and Protection, Access and Maintenance Easement

LEGEND:

- Denotes Found Iron Pipe
- Denotes Found 3/4" Iron Rebar
- Denotes Set 3/4" X 18" Iron Rebar, 1.5 LBS./FT.
- Denotes Sanitary Manhole
- Denotes High Tension Tower
- Denotes Wetland

Prepared By:

PINNACLE ENGINEERING GROUP
15850 BLUEMOUND ROAD | SUITE 210
BROOKFIELD, WI 53005
OFFICE: (262) 754-8888

This instrument drafted by John P. Konopacki, PLS-License No. S-2461

PEG JOB#117.00WI
SHEET 2 OF 15

Delineated Wetland on ____, by ____.
or See Sheet 7 for details.

CERTIFIED SURVEY MAP NO. _____

Being a part of the Northeast 1/4, the Southwest 1/4 and the Northwest 1/4 of the Southwest 1/4 and the Southeast 1/4 and Southwest 1/4 of the Northwest 1/4, Section 16, Township 1 North, Range 22 East, Village of Pleasant Prairie, Kenosha County, Wisconsin.

WISCONSIN
JOHN P. KONOPACKI
S-2461
Waukesha, WI
LAND SURVEYOR

MAY 3, 2016

- SEE SHEETS 9-12 FOR DEDICATION, PROVISIONS AND RESTRICTIVE COVENANTS.

NORTH

100-YEAR FLOOD DETAIL

GRAPHICAL SCALE (FEET)

0 — 1" = 300' — 600'

LEGEND:

- Denotes Found Iron Pipe
- Denotes Found 3/4" Iron Rebar
- Denotes Set 3/4" X 18" Iron Rebar, 1.5 LBS./FT.
- Denotes Sanitary Manhole
- Denotes High Tension Tower
- Denotes Wetland

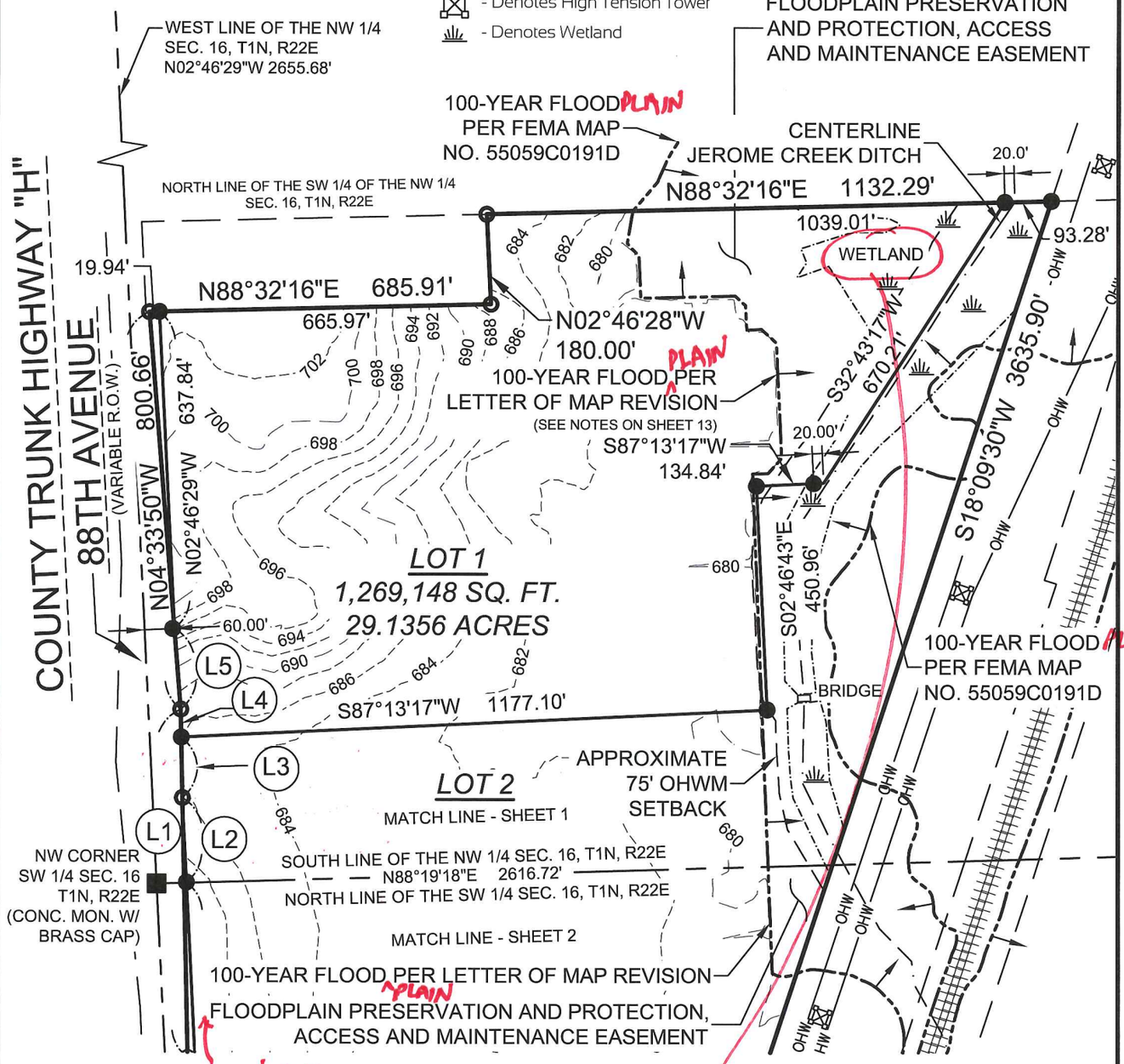

Prepared By:
PINNACLE ENGINEERING GROUP
15850 BLUEMOUND ROAD | SUITE 210
BROOKFIELD, WI 53005
OFFICE: (262) 754-8888

This instrument drafted by John P. Konopacki, PLS-License No. S-2461

PEG JOB#117.00WI

CERTIFIED SURVEY MAP NO. _____

Being a part of the Northeast 1/4, the Southwest 1/4 and the Northwest 1/4 of the Southwest 1/4 and the Southeast 1/4 and Southwest 1/4 of the Northwest 1/4, Section 16, Township 1 North, Range 22 East, Village of Pleasant Prairie, Kenosha County, Wisconsin.

100-YEAR FLOOD DETAIL

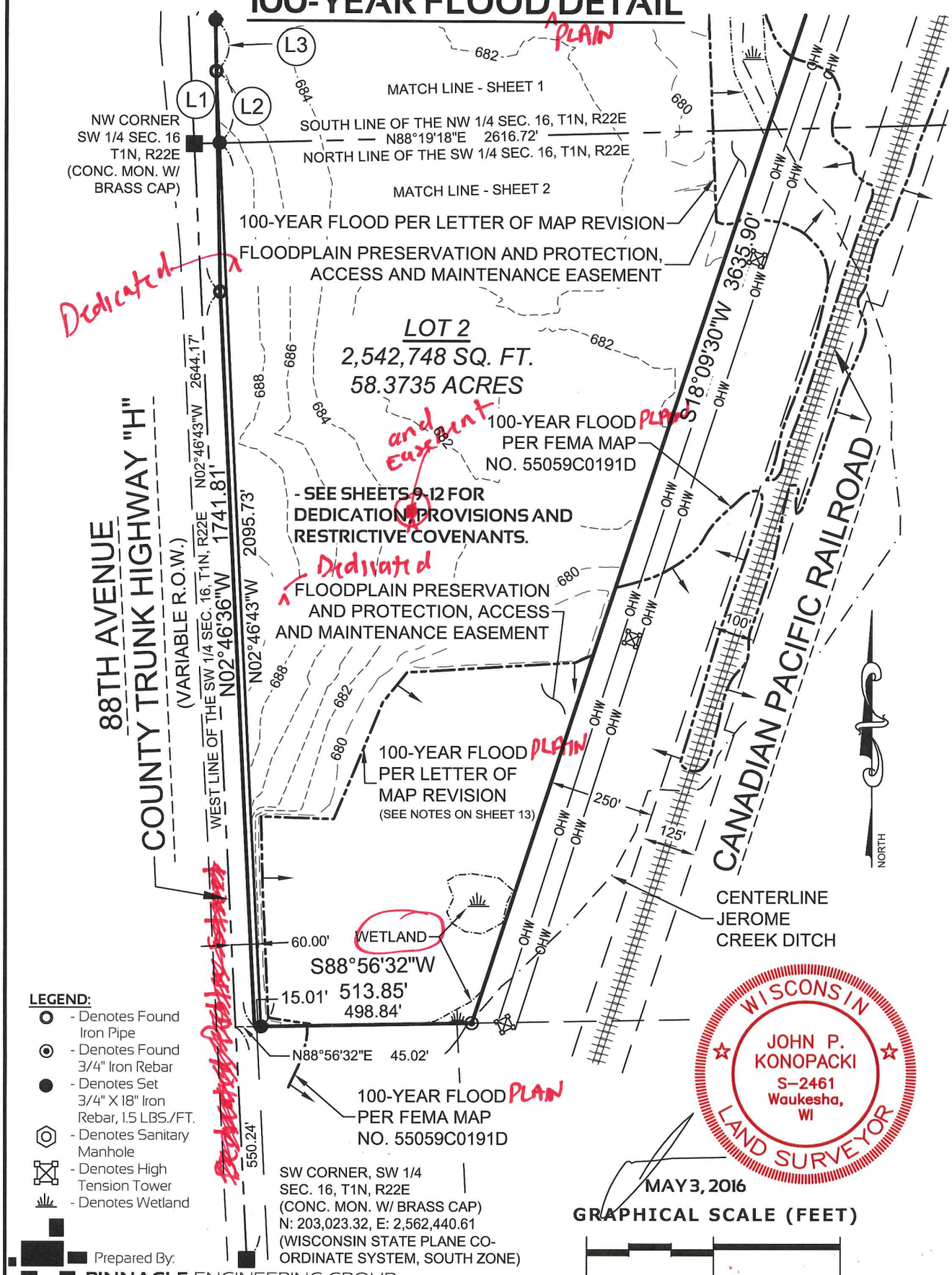

Prepared By:
PINNACLE ENGINEERING GROUP
15850 BLUEMOUND ROAD | SUITE 210
BROOKFIELD, WI 53005
OFFICE: (262) 754-8888

This instrument drafted by John P. Konopacki, PLS-License No. S-2461

PEG JOB#117.00WI

CERTIFIED SURVEY MAP NO. _____

Being a part of the Northeast 1/4, the Southwest 1/4 and the Northwest 1/4 of the Southwest 1/4 and the Southeast 1/4 and Southwest 1/4 of the Northwest 1/4, Section 16, Township 1 North, Range 22 East, Village of Pleasant Prairie, Kenosha County, Wisconsin.

WISCONSIN
JOHN P. KONOPACKI
S-2461
Waukesha, WI
LAND SURVEYOR

MAY 3, 2016

- SEE SHEET 7 FOR WETLAND PRESERVATION AND PROTECTION ACCESS AND MAINTENANCE EASEMENT DETAIL.

- SEE SHEET 8 FOR STORM WATER MANAGEMENT FACILITIES.RETENCTION PONDS, ACCESS AND MAINTENANCE EASEMENT EASEMENT LINE TABLE.

- SEE SHEETS 9-12 FOR DEDICATION, AND EASEMENT PROVISIONS AND RESTRICTIVE COVENANTS.

NORTH

PROPOSED EASEMENTS

GRAPHICAL SCALE (FEET)

0 1" = 300' 600'

LEGEND:

- Denotes Found Iron Pipe
- Denotes Found 3/4" Iron Rebar
- Denotes Set 3/4" X 18" Iron Rebar, 1.5 LBS./FT.
- Denotes Sanitary Manhole
- Denotes High Tension Tower
- Denotes Wetland

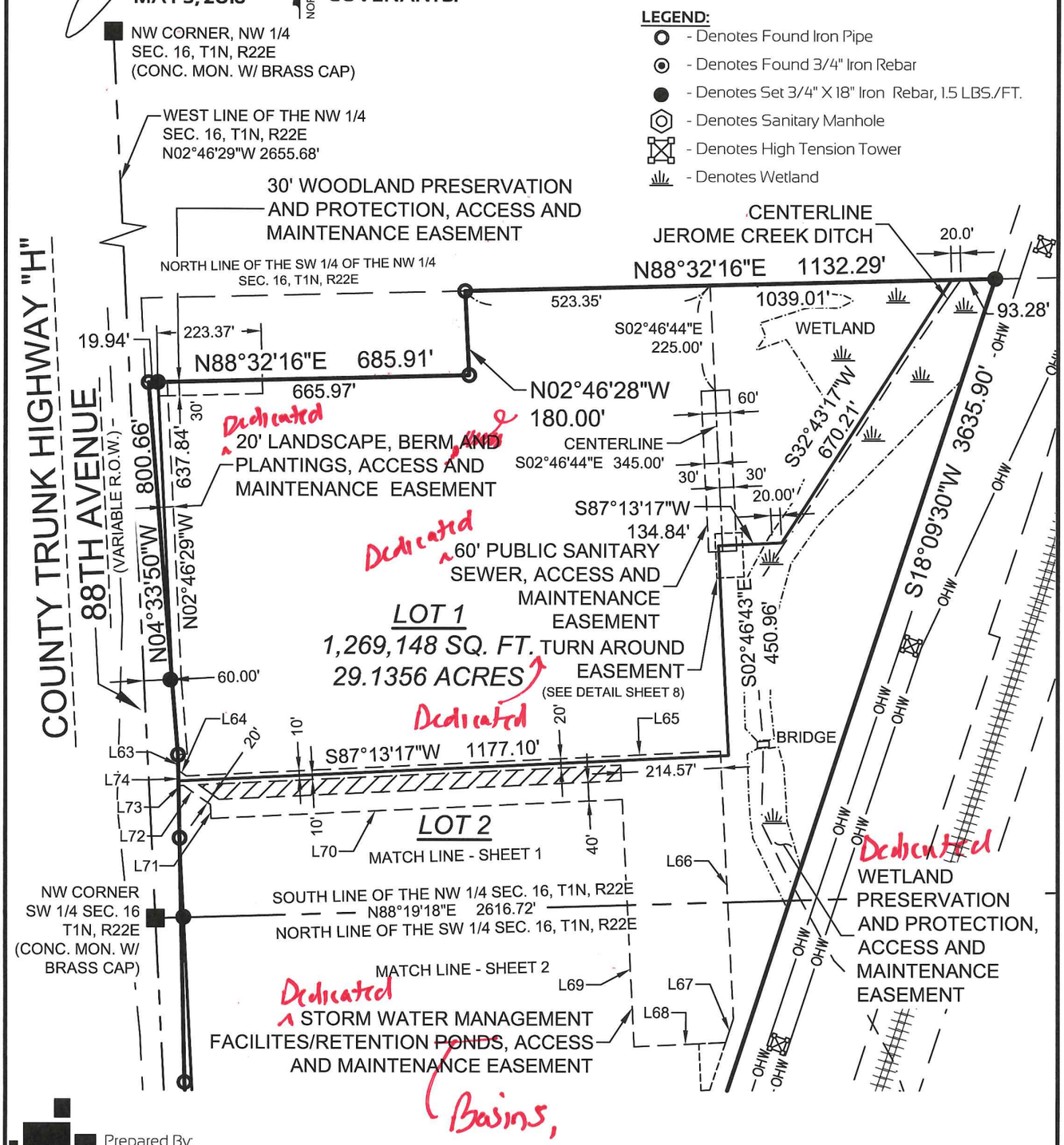

Prepared By:
PINNACLE ENGINEERING GROUP
15850 BLUEMOUND ROAD | SUITE 210
BROOKFIELD, WI 53005
OFFICE: (262) 754-8888

This instrument drafted by John P. Konopacki, PLS-License No. S-2461

PEG JOB#117.00WI

CERTIFIED SURVEY MAP NO. _____

Being a part of the Northeast 1/4, the Southwest 1/4 and the Northwest 1/4 of the Southwest 1/4 and the Southeast 1/4 and Southwest 1/4 of the Northwest 1/4, Section 16, Township 1 North, Range 22 East, Village of Pleasant Prairie, Kenosha County, Wisconsin.

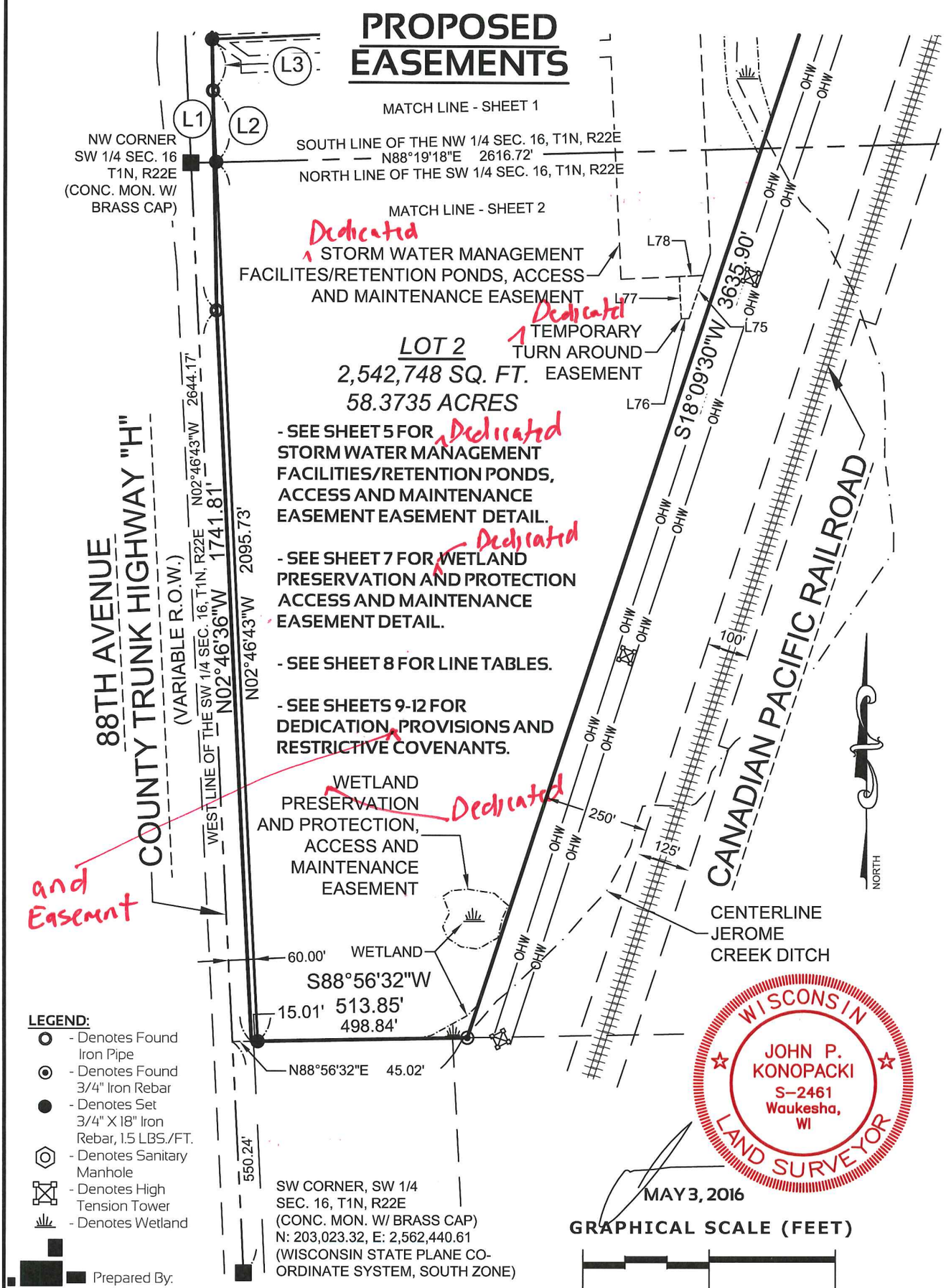

LEGEND:

- Denotes Found Iron Pipe
- Denotes Found 3/4" Iron Rebar
- Denotes Set 3/4" X 18" Iron Rebar, 1.5 LBS./FT.
- Denotes Sanitary Manhole
- Denotes High Tension Tower
- Denotes Wetland

Prepared By:
PINNACLE ENGINEERING GROUP
15850 BLUEMOUND ROAD | SUITE 210
BROOKFIELD, WI 53005
OFFICE: (262) 754-8888

This instrument drafted by John P. Konopacki, PLS-License No. S-2461

PEG JOB#117.00WI

CERTIFIED SURVEY MAP NO. _____

Being a part of the Northeast 1/4, the Southwest 1/4 and the Northwest 1/4 of the Southwest 1/4 and the Southeast 1/4 and Southwest 1/4 of the Northwest 1/4, Section 16, Township 1 North, Range 22 East, Village of Pleasant Prairie, Kenosha County, Wisconsin.

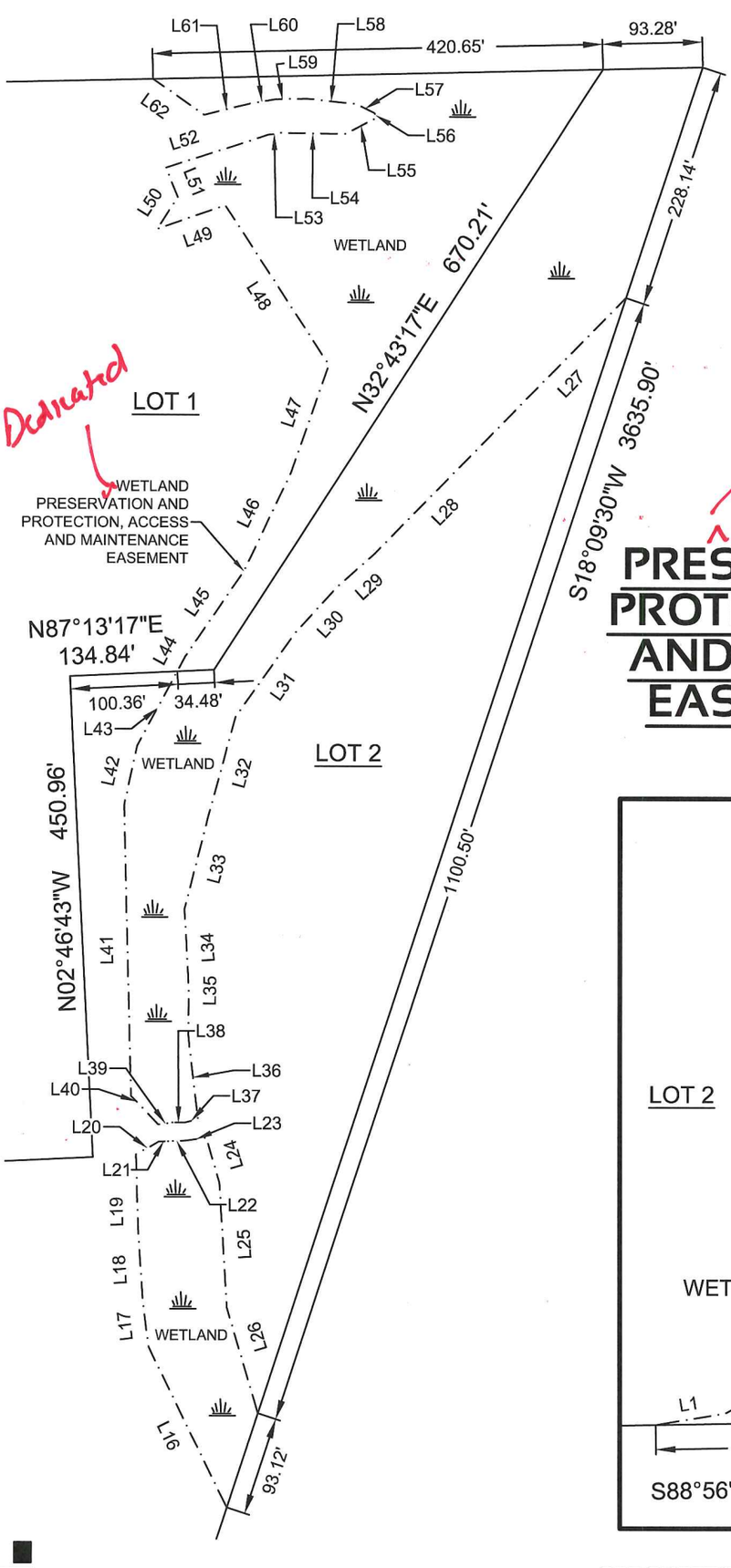

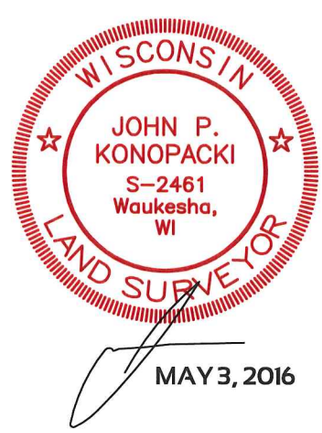

MAY 3, 2016

DEDICATED WETLAND PRESERVATION AND PROTECTION, ACCESS AND MAINTENANCE EASEMENT DETAIL

NOT TO SCALE

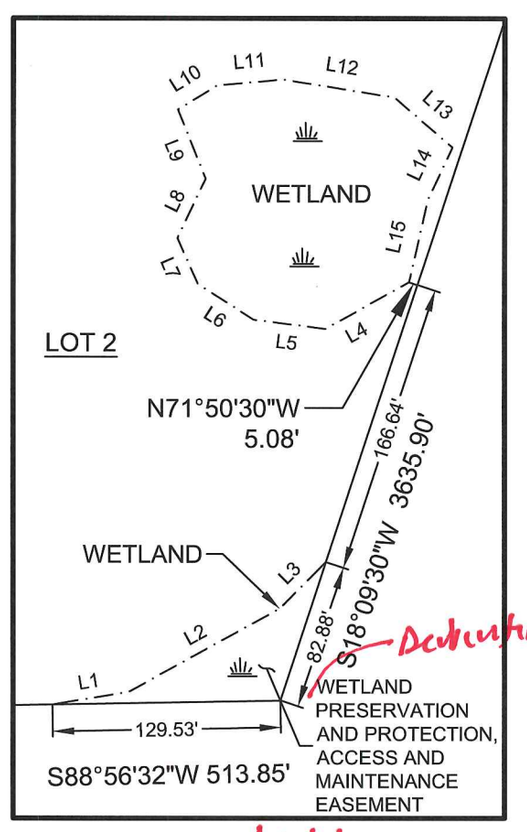

SEE SHEET 8 FOR Dedicated WETLAND PRESERVATION AND PROTECTION ACCESS AND MAINTENANCE LINE TABLE

Prepared By:
PINNACLE ENGINEERING GROUP
15850 BLUEMOUND ROAD | SUITE 210
BROOKFIELD, WI 53005
OFFICE: (262) 754-8888

This instrument drafted by John P. Konopacki, PLS-License No. S-2461

PEG JOB#117.00WI

CERTIFIED SURVEY MAP NO. _____

Being a part of the Northeast 1/4, the Southwest 1/4 and the Northwest 1/4 of the Southwest 1/4 and the Southeast 1/4 and Southwest 1/4 of the Northwest 1/4, Section 16, Township 1 North, Range 22 East, Village of Pleasant Prairie, Kenosha County, Wisconsin.

Dedicated

WETLAND PRESERVATION AND PROTECTION, ACCESS AND MAINTENANCE EASEMENT LINE TABLE

LINE NO.	BEARING	DISTANCE	LINE NO.	BEARING	DISTANCE
L1	N80°30'31"E	44.04'	L34	S03°01'46"E	74.42'
L2	N60°57'35"E	97.89'	L35	S00°31'18"W	44.39'
L3	N44°57'07"E	37.25'	L36	S06°30'47"E	79.25'
L4	S60°33'50"W	54.50'	L37	S75°09'11"W	12.80'
L5	N82°39'27"W	41.21'	L38	N89°49'45"W	11.41'
L6	N57°05'32"W	37.49'	L39	S82°43'36"W	13.47'
L7	N23°56'19"W	28.87'	L40	N43°20'49"W	37.00'
L8	N25°29'48"E	37.13'	L41	N01°23'58"W	272.46'
L9	N21°38'43"W	42.58'	L42	N12°19'44"E	56.60'
L10	N58°17'00"E	26.10'	L43	N28°11'06"E	79.05'
L11	N84°49'32"E	37.74'	L44	N28°11'06"E	16.37'
L12	S80°54'09"E	63.83'	L45	N34°09'10"E	96.83'
L13	S49°05'01"E	43.65'	L46	N25°28'45"E	102.50'
L14	S24°59'58"W	33.13'	L47	N19°11'16"E	106.51'
L15	S12°43'11"W	47.92'	L48	N33°08'59"W	177.89'
L16	N25°55'23"W	167.63'	L49	S70°24'44"W	67.56'
L17	N07°04'31"W	44.00'	L50	N32°46'02"E	35.92'
L18	N03°49'16"W	58.69'	L51	N22°12'50"W	29.94'
L19	N01°48'36"W	77.46'	L52	N71°56'09"E	100.57'
L20	N60°24'39"E	24.58'	L53	N80°46'51"E	11.49'
L21	N88°10'47"E	8.65'	L54	S89°14'13"E	60.48'
L22	N87°40'34"E	16.57'	L55	N63°10'27"E	33.76'
L23	N81°22'01"E	19.49'	L56	N33°17'05"W	5.10'
L24	S16°07'40"E	44.06'	L57	N64°18'45"W	19.11'
L25	S03°26'00"E	117.02'	L58	N83°55'53"W	46.20'
L26	S16°21'08"E	102.94'	L59	S88°19'06"W	30.21'
L27	S44°21'41"W	185.44'	L60	S80°10'57"W	24.07'
L28	S44°21'41"W	150.46'	L61	S76°02'30"W	43.53'
L29	S48°00'18"W	47.21'	L62	N54°52'46"W	58.22'
L30	S42°05'31"W	58.39'			
L31	S35°03'10"W	95.90'			
L32	S15°17'09"W	97.60'			
L33	S14°17'46"W	88.00'			

BOUNDARY LINE TABLE

LINE NO.	BEARING	DISTANCE
L1	N01°08'25"W	700.38'
L2	N02°46'29"W	169.31'
L3	N01°08'25"W	121.41'
L4	N01°08'25"W	55.97'
L5	N04°33'50"W	162.05'

Dedicated

STORM WATER DRAINAGE AND ACCESS EASEMENT LINE TABLE

LINE NO.	BEARING	DISTANCE
L63	S01°08'25"E	33.21'
L64	S54°49'56"E	20.74'
L65	N87°13'17"E	1143.28'
L66	S02°46'43"E	573.03'
L67	S18°09'39"W	53.50'
L68	S87°13'17"W	195.45'
L69	N02°46'43"W	530.00'
L70	S87°13'17"W	880.00'
L71	N02°46'43"W	29.66'
L72	N54°49'56"W	70.49'
L73	S87°13'17"W	10.41'
L74	N01°08'25"W	32.77'

Dedicated

TEMPORARY TURN AROUND EASEMENT LINE TABLE

LINE NO.	BEARING	DISTANCE
L75	S18°09'39"W	108.14'
L76	S87°13'17"W	18.35'
L77	N02°46'43"W	101.00'
L78	N87°13'17"E	57.00'

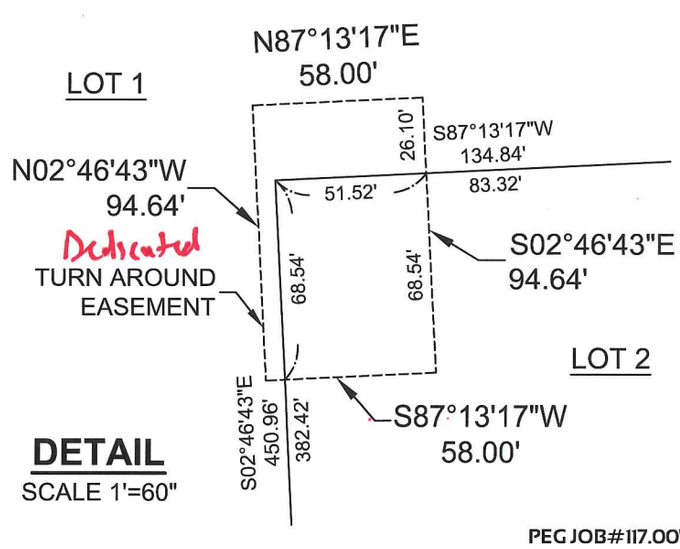

DETAIL
SCALE 1'=60"

WISCONSIN
JOHN P. KONOPACKI
S-2461
Waukesha, WI
LAND SURVEYOR

MAY 3, 2016

Prepared By:
PINNACLE ENGINEERING GROUP
15850 BLUEMOUND ROAD | SUITE 210
BROOKFIELD, WI 53005
OFFICE: (262) 754-8888

This instrument drafted by John P. Konopacki, PLS-License No. S-2461

PEG JOB#117.00WI

CERTIFIED SURVEY MAP NO. _____

Being a part of the Northeast 1/4, the Southwest 1/4 and the Northwest 1/4 of the Southwest 1/4 and the Southeast 1/4 and Southwest 1/4 of the Northwest 1/4, Section 16, Township 1 North, Range 22 East, Village of Pleasant Prairie, Kenosha County, Wisconsin.

The following "Dedication ~~of~~ and Easement Provisions" and "Restrictive Covenants" were drafted by the Village of Pleasant Prairie and ~~is~~ are shown hereon as a condition of map approval. Inclusion thereof on this document is not to be considered practicing law in the State of Wisconsin by the above signed Land Surveyor, the Land Surveyor is not responsible for rights granted, perceived or otherwise stated herein.

1. The fee interest the in the area shown as a **Dedicated Public Street** on this Certified Survey Map (CSM) for 88th Avenue (a/k/a County Trunk Highway H) is hereby dedicated, given, granted and conveyed by Majestic Realty Co., (the "Owner") to the Village of Pleasant Prairie, its successors and assigns (the "Village") for the construction, installation, repair, alteration, replacement and planting and maintenance of the terrace areas referred to collectively as the public highway improvements, uses and purposes, including, without limitation, pavement, curbs and gutters, bike lanes, ~~if required by the Village or Kenosha County ("Kenosha County")~~, street signs, street lights, street trees, sanitary sewerage system improvements, water system improvements, storm sewer and drainage system improvements, utility and communications facilities, street tree landscaping, and for all related ingress and egress. Such fee interest is subject to the following: a nonexclusive easement hereby reserved by the current Owner for the future Owner(s) of ~~the~~ Lot 1 and 2 shown on this CSM which ~~is~~ are adjacent to the Dedicated Public Street for the required planting, mowing, watering and maintenance of grass within the grassy terrace area, for the maintenance and replanting of street trees and the clearance in the area between the roadway and the Lot. In the event of any conflict between the rights of the Village or Kenosha County or Kenosha County under its fee interest in the Dedicated Public Street area shown on this CSM and the rights of the Owner, or of the future land Owners, or of any future Commercial Owners Association pursuant to the dedication retained herein, the rights of the Village shall be deemed to be superior.

2. A perpetual nonexclusive easement coextensive with the area shown on this CSM as a Dedicated 30' Wide Sanitary Sewer Main, Access, Maintenance Easement was dedicated, given, granted and conveyed by the previous landowner to the Village and recorded as Document # _____ at the Kenosha County Register of Deeds Office to the Village for public sanitary sewerage system improvements, uses and purposes, and for all related ingress and egress, construction, installation, repair, alteration, replacement and maintenance activities. This CSM also hereby dedicates, gives, grants and conveys an additional 30' to the existing Sanitary Sewer Easement for a total of a **Dedicated 60' Sanitary Sewer Main, Access and Maintenance Easement** to the Village for public sanitary sewerage system improvements, uses and purposes, and for all related ingress and egress, construction, installation, repair, alteration, replacement and maintenance activities. In addition, there are new or additional areas also shown as **Dedicated 60' Sanitary Sewer Main, Access and Maintenance Easement** on this CSM to provide Village gravel access for maintenance to the existing sanitary sewer system.

   The Dedicated 60' Sanitary Sewer Main, Access and Maintenance Easement areas shall be exclusive, except for: (1) the Owner's use, planting and irrigating, care and maintenance of the Dedicated Sanitary Sewer, Access and Maintenance Easement vegetative area(s) on the Lots as it will not interfere with the improvements, uses and purposes of the Village and ~~(2)~~ _____. In the event of any conflicts between the rights of the Village pursuant to this Dedicated Sanitary Sewer, Access and Maintenance Easement and the rights of any other persons or entities with respect to this Easement, the Village's rights under this Easement shall be deemed to be superior.

3. Perpetual nonexclusive easements coextensive with the areas shown as a **Dedicated Storm Water Management, Retention Basin, Access and Maintenance Easement** on this CSM are hereby dedicated, given, granted and conveyed by the Owner to the Village for private storm water drainage system improvements, storm water retention basin storage and conveyance, uses and purposes, and for all related ingress and egress, construction, installation, repair, alteration, replacement and maintenance activities. These Dedicated Storm Water Management, Retention Basin, Access and Maintenance Easements shall be exclusive, except for: (1) the Owner's use, planting and irrigating, care and maintenance of the Dedicated Storm Water Management, Retention Basin, Access and Maintenance Easement areas on the Lots as it will not interfere with the improvements, uses and purposes of the Village. In the event of any conflicts between the rights of the Village pursuant to the Dedicated Storm Water Management, Retention Basin, Access and Maintenance Easements and the rights of any other persons or entities with respect to the Dedicated Easement, the Village's rights under these Easements shall be deemed to be superior.

4. A perpetual nonexclusive easement with the area shown as a **Dedicated 20' Landscape, Berm, Plantings, Access and Maintenance Easement** on this CSM is hereby dedicated, given, granted and conveyed by the Owners of Lot 1 to the Village for the grading, berming, placing of topsoil and seed/sod, installing and maintaining sprinklers, installing and maintaining fences and retaining walls, installing trees, plants and related landscaping, and for all related ingress and egress, including replanting and other landscape maintenance activities pursuant to the Village approved Site and Operational Plan landscape screening requirements for the approval of the Majestic Building to be constructed on Lot 1 of this CSM. This Dedicated 20' Landscape, Berm, Plantings, Access and Maintenance Easement area shall be exclusive, except for: (1) the Lot Owner's responsibility for the grading, berming, installing of topsoil and seed/sod, installing plants, trees and related landscape materials, installing and maintaining sprinklers, replanting, replacing and sprinklers and other landscape maintenance activities; (2) such other easements as may be dedicated on the CSM with respect to the same area or any portion thereof; and (3) such other uses of the Landscape Easement area that may be approved by the Village and subject to any conditions set forth by the Village. In the event of any conflicts between the rights of the Village pursuant to the Dedicated 20' Landscape, Berm, Plantings, Access and Maintenance Easement and the rights of other persons or entities with respect to the Easement, the Village's rights under this Easement shall be deemed to be superior.

WISCONSIN
JOHN P. KONOPACKI
S-2461
Waukesha, WI
LAND SURVEYOR

MAY 3, 2016

Prepared By:
PINNACLE ENGINEERING GROUP
15850 BLUEMOUND ROAD | SUITE 210
BROOKFIELD, WI 53005
OFFICE: (262) 754-8888

This instrument drafted by John P. Konopacki, PLS-License No. S-2461

CERTIFIED SURVEY MAP NO. _____

Being a part of the Northeast 1/4, the Southwest 1/4 and the Northwest 1/4 of the Southwest 1/4 and the Southeast 1/4 and Southwest 1/4 of the Northwest 1/4, Section 16, Township 1 North, Range 22 East, Village of Pleasant Prairie, Kenosha County, Wisconsin.

5. Nonexclusive easements coextensive within the areas shown on this CSM as **Dedicated Wetland Preservation and Protection, Access and Maintenance Easement** areas are hereby dedicated, given, granted and conveyed by the Owner to the Village for wetland conservancy preservation, protection, and maintenance purposes and uses and for related ingress and egress. Unless the Village exercises the rights granted to it pursuant to these Easements, the Village shall have no obligation to do anything related to its rights under these easements.

6. Nonexclusive easements coextensive within the areas shown on this CSM as **Dedicated Floodplain Preservation and Protection, Access and Maintenance Easement** areas are hereby dedicated, given, granted and conveyed by the Owner to the Village for floodplain conservancy preservation, protection, and maintenance purposes and uses and for related ingress and egress. Unless the Village exercises the rights granted to it pursuant to these Easements, the Village shall have no obligation to do anything related to its rights under these easements.

7. Nonexclusive easements coextensive with the areas shown on this CSM as **Dedicated Woodland Preservation and Protection, Access and Maintenance Easement** areas are hereby dedicated, given, granted and conveyed by the Owner to the Village for tree and large shrubbery protection, preservation and maintenance purposes and uses and for related ingress and egress. Unless the Village exercises the rights granted to it pursuant to these Easements, the Village shall have no obligation to do anything related to its rights.

RESTRICTIVE COVENANTS

1. Majestic Realty Co. (referred to as the Owner) covenants that the **Dedicated 60' Sanitary Sewer, Access and Maintenance Easement** areas shown on this CSM hereby places restrictions on the referenced land because of the location of this sanitary sewer main easement which was given, granted and conveyed by the previous and current Owners to the Village for public sanitary sewer purposes and system improvements, uses and purposes, and for all related and incidental ingress and egress, construction, installation, repair, alteration, replacements, plantings and maintenance activities to serve the Development as referenced in the Dedications and Easement language on this CSM. The Owner further covenants that there shall be no structures, fences, parking lots, curb and gutter, driveways or landscaping of any kind placed within the easement area without prior written approval of the Village. However, with respect to fences, the Village hereby approves fencing in the area of Owner's site plan that is required to provide a secure yard for Owner's Tenants. Such fencing will have a gate and a lock ("Knox lock") to provide the Village with unrestricted access to the Sanitary Sewer, Access and Maintenance Easement area. Furthermore, in accordance with Owner's approved site plan the Village has agreed to allow for the placement of structures, fences, parking lots, curb and gutter, driveways and landscaping within the sewer easement area. In the event that the Village exercises its rights to maintain, repair or replace the sanitary sewer and related appurtenances, the Village shall repair or replace the sanitary sewer and related appurtenances but the Owner(s) of the affected property, not the Village, shall be responsible for any and all costs associated with the replacement of said fencing, parking lots, driveways or landscaping. This covenant shall run with the land, shall be binding upon the Owner its successors, successors and assigns and successors-in-title of the land, in their capacity as the Owner of the Lots, and shall benefit and be enforceable by the Village.

   To the extent that the Village performs any sanitary sewer maintenance activities that involves the reconstruction, replacement or repair of the private infrastructure which must be replaced in conducting the sanitary sewer repair or maintenance work, the Owner shall be liable for any costs which may be incurred by the Village for the private infrastructure reconstruction, replacement or repairs, which the Village may recover from such Owner as special assessments or special charges under Section 66.0627 (or successors or similar provisions) of the Wisconsin Statutes or otherwise according to law.

2. The Owner hereby covenants that the Lot 1 and Lot 2 Owner shall have the obligation of maintaining the **Dedicated Storm Water Drainage, Retention Basin, Access and Maintenance Easement** areas shown on this CSM in a functional, neat and nuisance free condition to handle storm water in the Development. Such maintenance shall include, without limitation and as needed, grading, seeding or sodding, maintaining erosion control methods to protect the drainageways; ditching to re-establish design capacity; removing of trash, debris, leaves and brush; clearing, repairing and replacing inlets, outlets and catch basin structures; mowing; and weeding to prevent nuisance conditions. The Owner further covenants that there shall be no structures, fences, gates, signs, berming or altering of the grade of the land within the Easement area which blocks, diverts or re-routs the drainage flow or which might interfere with the storm water function and flow, unless express written approval is granted by the Village and subject to any such conditions as the Village may impose. This covenant shall run with the land, shall be binding upon the Owner, its successors, successors and assigns and successors-in-title of the land, in their capacity as the Owner of Lot 1 and Lot 2, and shall benefit and be enforceable by the Village.

   To the extent that the Village performs any such storm water drainage or retention basin related maintenance activities as a result of Owner's failure to do so, the Owners shall be liable for any costs which may be incurred by the Village, which the Village may recover from such Owners as special assessments or special charges under Section 66.0627 (or successors or similar provisions) of the Wisconsin Statutes or otherwise according to law. Unless the Village exercises the rights granted to it in the Dedications and Easement Provisions on this CSM, the Village shall have no obligation to do anything pursuant to its rights under these easement dedications.

WISCONSIN
JOHN P. KONOPACKI
S-2461
Waukesha, WI
LAND SURVEYOR

MAY 3, 2016

Prepared By:
PINNACLE ENGINEERING GROUP
15850 BLUEMOUND ROAD | SUITE 210
BROOKFIELD, WI 53005
OFFICE: (262) 754-8888

This instrument drafted by John P. Konopacki, PLS-License No. S-2461

CERTIFIED SURVEY MAP NO. _____

Being a part of the Northeast 1/4, the Southwest 1/4 and the Northwest 1/4 of the Southwest 1/4 and the Southeast 1/4 and Southwest 1/4 of the Northwest 1/4, Section 16, Township 1 North, Range 22 East, Village of Pleasant Prairie, Kenosha County, Wisconsin.

RESTRICTIVE COVENANTS

3. The Owner hereby covenants that the Lot 1 and Lot 2 Owner(s) shall have the obligation of planting, maintaining and replacing the **Street Trees** located within the County Trunk Highway H right-of-way area shown on this CSM. Such planting and maintenance shall include without limitation and as needed planting, staking, mulching, weeding, pruning, watering, replanting, and removing of trash, debris, leaves and brush around the trees in order to prevent a nuisance condition. No driveways, signage, mail boxes, parking areas, structures or fences shall be erected within the right-of-ways, which might damage the street trees or might interfere with Kenosha County's or the Village's rights to maintain the public street improvements, unless approved by Kenosha County and the Village. This covenant shall run with the land, shall be binding upon the Owner(s) (s) its successors, successors and assigns and successors-in-title of the land, in their capacity as the Owner(s) of Lot 1 and Lot 2, and shall benefit and be enforceable by the Village. Such street tree planting and maintenance shall be performed regularly, without compensation, and to the satisfaction of the Village.

To the extent that the Village performs any such street tree related maintenance activities as a result of Owner(s)'s failure to do so, the Owner(s) shall be liable for any costs which may be incurred by the Village, which the Village may recover from such Owner(s) as special assessments or special charges under Section 66.0627 (or successors or similar provisions) of the Wisconsin Statutes or otherwise according to law. Unless the Village exercises the rights granted to it in the Dedications(s) and Easement Provisions on this CSM, the Village shall have no obligation to do anything pursuant to its rights under this easement dedication(s).

~~4.~~ 5. The Owner hereby covenants that the Lot 1 and Lot 2 Owner(s) shall have the obligation of installing berms, plantings and groundcover, and landscape maintenance activities pursuant to the Village approved Majestic Site and Operational Plan landscape screening requirements within Lot 1 and Lot 2 within the **Dedicated 20' Landscape, Berm, Plantings, Access and Maintenance Easement** on this CSM. Such planting and maintenance shall include without limitation grading, berming, installing of topsoil and seed/sod, installing plants, trees and related landscape materials, installing and maintaining sprinklers, installing and maintaining fences or retaining walls, watering, pruning, replanting, and other landscape maintenance activities. No driveways, signage, mail boxes, parking areas, structures or fences shall be erected within the Easement area, which might damage the landscaping or plantings, unless approved by the Village. This covenant shall run with the land, shall be binding upon the Owner(s) (s) its successors, successors and assigns and successors-in-title of the land, in their capacity as the Owner(s) of Lot 1 and Lot 2, and shall benefit and be enforceable by the Village. Such landscape plantings and maintenance shall be performed regularly, without compensation, and to the satisfaction of the Village.

Village approved

To the ~~extent that~~ the Village performs any such landscape related maintenance activities as a result of Owner(s)'s failure to do so in accordance with the Site and Operational Plan, the Owner(s) shall be liable for any costs which may be incurred by the Village, which the Village may recover from such Owner(s) as special assessments or special charges under Section 66.0627 (or successors or similar provisions) of the Wisconsin Statutes or otherwise according to law. Unless the Village exercises the rights granted to it in the Dedications and Easement Provisions on this CSM, the Village shall have no obligation to do anything pursuant to its rights under this easement dedication.

~~5.~~ 6. The Owner hereby covenants that the Lot 1 and Lot 2 Owner(s) shall have the obligation of protecting and preserving the **Dedicated Wetland Preservation and Protection, Access and Maintenance Easement** areas shown on this CSM. Such maintenance shall include without limitation and as needed removing of dead, dying or decayed trees, plant material or evasive species, planting of wetland plant life as approved by the Village and the Wisconsin Department of Natural Resources, and removing of trash or debris in order to prevent a nuisance condition. No mowing or cutting of the wetlands shall be allowed unless expressly approved by the Village. No signage or fences shall be erected within the wetlands, which may damage the wetland areas. This covenant shall run with the land, shall be binding upon the Owner(s), its successors and assigns and successors-in-title of the land, in their capacity as the Owner(s) of Lot 1 and Lot 2, and shall benefit and be enforceable by the Village. The Owner(s) shall perform such maintenance as may be needed, without compensation, and to the satisfaction of the Village.

To the extent that the Village performs any such wetland related maintenance activities as a result of Owner(s)'s failure to do so, the Owner(s) shall be liable for any costs which may be incurred by the Village, which the Village may recover from such Owner(s) as special assessments or special charges under Section 66.0627 (or successors or similar provisions) of the Wisconsin Statutes or otherwise according to law. Unless the Village exercises the rights granted to it in the Dedications(s) and Easement Provisions on this CSM, the Village shall have no obligation to do anything pursuant to its rights under these easement dedications.

4. (see attached)

WISCONSIN
JOHN P. KONOPACKI
S-2461
Waukesha, WI
LAND SURVEYOR

MAY 3, 2016

Prepared By:
PINNACLE ENGINEERING GROUP
15850 BLUEMOUND ROAD | SUITE 210
BROOKFIELD, WI 53005
OFFICE: (262) 754-8888

This instrument drafted by John P. Konopacki, PLS-License No. S-2461

CERTIFIED SURVEY MAP NO. _____

Being a part of the Northeast 1/4, the Southwest 1/4 and the Northwest 1/4 of the Southwest 1/4 and the Southeast 1/4 and Southwest 1/4 of the Northwest 1/4, Section 16, Township 1 North, Range 22 East, Village of Pleasant Prairie, Kenosha County, Wisconsin.

RESTRICTIVE COVENANTS CONTINUED

~~6.~~ 7. The Owner hereby covenants that the Lot 1 and Lot 2 Owner(s) shall have the obligation of protecting and preserving the **Dedicated Floodplain Preservation and Protection, Access and Maintenance Easement** areas shown on this CSM. Such maintenance shall include without limitation and as needed removing of dead, dying or decayed trees which blocks or diverts the natural water flow within the floodplain and removing of trash or debris in the floodplain in order to prevent a nuisance condition. No signage, fences or parking areas shall be installed within the floodplain which may block or redirect overland flow unless approved by the Village. This covenant shall run with the land, shall be binding upon the Owner(s) its successors, successors and assigns and successors-in-title of the land, in their capacity as the Owner(s) of Lot1 and Lot 2 and shall benefit and be enforceable by the Village. The Owner(s) shall perform such maintenance as may be needed, without compensation, and to the satisfaction of the Village.

To the extent that the Village performs any such floodplain related maintenance activities as a result of Owner's failure to do so, the Owner(s) shall be liable for any costs which may be incurred by the Village, which the Village may recover from such Owner(s) as special assessments or special charges under Section 66.0627 (or successors or similar provisions) of the Wisconsin Statutes or otherwise according to law. Unless the Village exercises the rights granted to it in the Dedications and Easement Provisions on this CSM, the Village shall have no obligation to do anything pursuant to its rights under these easement dedications.

WISCONSIN
JOHN P. KONOPACKI
S-2461
Waukesha, WI
LAND SURVEYOR

MAY 3, 2016

Prepared By:
PINNACLE ENGINEERING GROUP
15850 BLUEMOUND ROAD | SUITE 210
BROOKFIELD, WI 53005
OFFICE: (262) 754-8888

This instrument drafted by John P. Konopacki, PLS-License No. S-2461

CERTIFIED SURVEY MAP NO. _____

Being a part of the Northeast 1/4, the Southwest 1/4 and the Northwest 1/4 of the Southwest 1/4 and the Southeast 1/4 and Southwest 1/4 of the Northwest 1/4, Section 16, Township 1 North, Range 22 East, Village of Pleasant Prairie, Kenosha County, Wisconsin.

SURVEYOR'S CERTIFICATE

STATE OF WISCONSIN)
WAUKESHA COUNTY) SS

I, John P. Konopacki, Professional Land Surveyor, do hereby certify:

That I have surveyed, mapped, dedicated and divided that part of the Northeast 1/4, the Southwest 1/4 and the Northwest 1/4 of the Southwest 1/4 and the Southeast 1/4 and Southwest 1/4 of the Northwest 1/4, Section 16, Township 1 North, Range 22 East, Village of Pleasant Prairie, Kenosha County, Wisconsin, which is bounded and described as follows:

Commencing at the southwest corner of the Southwest 1/4 of said Section 16;
Thence North 02°46'43" West along the west line of said Southwest 1/4, 550.24 feet;
Thence North 88°56'32" East, 45.02 feet to the east right of way line of 88th Avenue - County Trunk Highway "H" and the Point of Beginning;

Thence North 02°46'36" West along said east right of way line, 1741.81 feet;
Thence North 01°08'25" West along said east right of way line, 700.38 feet;
Thence North 04°33'50" West along said east right of way line, 800.66 feet to the south line of Pauper's Cemetery Plat No. 8110;
Thence North 88°32'16" East along the south line of said cemetery plat, 685.91 feet;
Thence North 02°46'28" West along the east line of said cemetery plat, 180.00 feet to the north line of the Southwest 1/4 of the Northwest 1/4 of said Section 16;
Thence North 88°32'16" East along said north line, 1132.29 feet;
Thence South 18°09'30" West, 3635.90 feet;
Thence South 88°56'32" West, 513.85 feet to the Point of Beginning.

Dedicating the westerly portion of subject property as graphically shown for public right of way purposes.

Containing 3,848,238 square feet (88.3434 acres) of land Gross and 3,811,896 square feet (57.5091 acres) of land Net, more or less.

That I have made such survey, land division and map by the direction of Majestic Realty Company, owner of said land.

That such plat is a correct representation of all the exterior boundaries of the land surveyed and the land division thereof made.

That I have fully complied with the provisions of s.236.34 of the Wisconsin State Statutes and the Village of Pleasant Prairie Land Division Ordinance in surveying, mapping, dedicating and dividing the same.

Date: MAY 3, 2016

WISCONSIN
JOHN P. KONOPACKI
S-2461
Waukesha, WI
LAND SURVEYOR

John P. Konopacki
Professional Land Surveyor S-2461

NOTES:
- All measurements have been made to the nearest one-hundreth of a foot.
- All angular measurements have been made to the nearest one second.
- Wetland Delineated by Dave Meyer of Wetland & Waterway Consulting, LLC on June 17, 2008, approved by WDNR December 19, 2008.
- Ordinary High Water Mark (OHWM) staked by Dave Meyer of Wetland & Waterway Consulting, LLC on June 17, 2008, approved by WDNR December 19, 2008.
- Property serviced by Municipal Sanitary Sewer and Water.
- Any land below the Ordinary High Water mark of a lake or a navigable stream is subject to the Public Trust In Navigable Waters that is established under Article IX, Section 1, of the State Constitution.
- VERTICAL DATUM: National Geodetic Vertical Datum of 1929 (NGVD29). Contours are shown at a 2' interval based on actual ground survey of the current ground terrain. Reference Benchmark: Concrete Monument with Brass Cap at the southwest corner of the Southwest 1/4 Section 16, Township 1 North, Range 22 East. Elevation=680.50.
- FLOOD ZONE CLASSIFICATION: The property lies with in Zone AE of the Flood Insurance Rate Map, Community Panel No. 55059C0191D, which bears an effective date of JUNE 19, 2012 in which Base Flood Elevations have been determined. The subject property is partially in a Special Flood Hazard Area subject to inundation by the 1% annual chance flood and partially in Floodway areas. Floodplain revised per the Federal Emergency Management Agency (FEMA) Letter of Map Revision Based on Fill Determination Document (Removal) dated January 29, 2016 case No. 16-05-2410X.
- Existing Sanitary Sewer Easement as disclosed by Survey No. 33618, as filed with the Kenosha County Land Records Office, dated October 20, 1999.
- Existing 100' Jerome Creek Drainage Easement granted to the Town of Pleasant Prairie recorded as Document No. 500985.

Prepared By:
PINNACLE ENGINEERING GROUP
15850 BLUEMOUND ROAD | SUITE 210
BROOKFIELD, WI 53005
OFFICE: (262) 754-8888

This instrument drafted by John P. Konopacki, PLS-License No. S-2461

CERTIFIED SURVEY MAP NO. _____

Being a part of the Northeast 1/4, the Southwest 1/4 and the Northwest 1/4 of the Southwest 1/4 and the Southeast 1/4 and Southwest 1/4 of the Northwest 1/4, Section 16, Township 1 North, Range 22 East, Village of Pleasant Prairie, Kenosha County, Wisconsin.

OWNER'S CERTIFICATE OF DEDICATION

Majestic Realty Company, duly organized and existing under and by virtue of the laws of the State of _____, as owner, does hereby certify that said company caused the land described on this certified survey map to be surveyed, divided, dedicated and mapped as represented on this certified survey map in accordance with the requirements of the Village of Pleasant Prairie.

Majestic Realty Company, as owner, does further certify that this certified survey map is required by s.236.10 or s.236.12 of the Wisconsin State Statutes to be submitted to the following for approval or objection:

1. Village of Pleasant Prairie

IN WITNESS WHEREOF, the said Majestic Realty Company has caused these presents to be signed by (name) _____, (title) _____, at (city) _____, _____ County, (state)_____, on this _____ day of _____ , 2016.

In the presence of: Majestic Realty Company

_____
(name - title)

STATE OF _____)
_____ COUNTY) SS

Personally came before me this _____ day of _____ , 2016, (name) _____, (title) _____, of the Majestic Realty Company, to me known to be the person who executed the foregoing instrument and acknowledged that they executed the foregoing instrument by its authority.

_____
Notary Public
Name:_____
State of _____
My Commission Expires: _____

WISCONSIN
JOHN P. KONOPACKI
S-2461
Waukesha, WI
LAND SURVEYOR

MAY 3, 2016

Prepared By:
PINNACLE ENGINEERING GROUP
15850 BLUEMOUND ROAD | SUITE 210
BROOKFIELD, WI 53005
OFFICE: (262) 754-8888

This instrument drafted by John P. Konopacki, PLS-License No. S-2461

CERTIFIED SURVEY MAP NO. _____

Being a part of the Northeast 1/4, the Southwest 1/4 and the Northwest 1/4 of the Southwest 1/4 and the Southeast 1/4 and Southwest 1/4 of the Northwest 1/4, Section 16, Township 1 North, Range 22 East, Village of Pleasant Prairie, Kenosha County, Wisconsin.

PLAN COMMISSION APPROVAL

Approved by the Plan Commission of the Village of Pleasant Prairie on this _____ day of _____, 2016.

_____
Date

_____
Thomas W. Terwall, Chairman

VILLAGE BOARD APPROVAL

Approved by the Village Board of the Village of Pleasant Prairie, Wisconsin, on this _____ day of _____, 2016.

_____
Date

_____
John P. Steinbrink, Village President

_____
Date

_____
Jane M. Romanowski, Village Clerk

WISCONSIN
JOHN P. KONOPACKI
S-2461
Waukesha, WI
LAND SURVEYOR

MAY 3, 2016

Prepared By:
PINNACLE ENGINEERING GROUP
15850 BLUEMOUND ROAD | SUITE 210
BROOKFIELD, WI 53005
OFFICE: (262) 754-8888

This instrument drafted by John P. Konopacki, PLS-License No. S-2461

The Owner(s) hereby covenants that the Lot 1 and Lot 2 Owner(s) have the obligation and made an agreement to pay for installing public street lights and related appurtenances within the County Trunk Highway (CTH) H (a/k/a 88th Avenue) Dedicated Public Street right-of-way and also for paying for the ongoing public street lights energy and maintenance costs, which shall be billed by the Village to the benefitting industrial property(ies) along CTH H within a proposed Village Street Light District. This covenant shall run with the land, shall be binding upon the Owner(s), its successors, successors and assigns and successors-in-title of the land, in their capacity as the Owner(s) of Lot 1 and Lot 2, and shall benefit and be enforceable by the Village.

Cd/Planner/Developments/Commercial/Other Commercial/Majestic/Majestic Other Restrictive Covenant Language

VILLAGE OF PLEASANT PRAIRIE

VILLAGE OF PLEASANT PRAIRIE
SITE AND OPERATIONAL PLAN
AND CONDITIONAL USE PERMIT ZONING APPLICATION

USE THIS FORM FOR:
Tenants/Use changes proposing to occupy 50% or more of an existing commercial/industrial building.

To construct a **new** or addition to principal or accessory structure.

Use requires a Conditional Use Permit.

FOR OFFICE USE ONLY
Application Filed on _____ 20 .
Preliminary Determination of Completeness on: _____ 20
Revised Plans Submitted: _____ 20
Public Hearing Required: Hearing Date: _____, 20 Published on: _____ and _____, 20 Notices sent on: _____, 20
Approved by Plan Commission on _____ 20 , Zoning Administrator on _____ 20
Denied by Plan Commission on _____ 20 , Zoning Administrator on _____ 20

SECTION 1: GENERAL INFORMATION

NAME OF BUSINESS: Majestic Realty Co.

SITE ADDRESS: 88th Ave., Pleasant Prairie, WI

BRIEF PROJECT DESCRIPTION: Construction of a 424,164 shell building and related site improvements.

PROPOSED NUMBER OF FULL TIME EMPLOYEES: TBD

PROPOSED NUMBER OF PART-TIME EMPLOYEES: TBD

SITE SIZE: 3,812,720 / 1,269,148 **sq. ft.** 87.5 / 29.1 **acres** OVERALL / NEW LOT "PHASE 1"

PROPOSED BUILDING SIZE: _____ **sq.ft. HEIGHT:** _____ **ft.**

PROPOSED ADDITION SIZE: _____ **sq.ft. HEIGHT:** _____ **ft.**

LEGAL DESCRIPTION: SEE ATTACHED CSM

TAX PARCEL NUMBER(S) : 92-4-122-162-0301

CURRENT ZONING CLASSIFICATION(S) OF THE PROPERTY: M-2

1. **Is a zoning map amendment proposed with this project?** ☐ **Yes** ☒ **No**
   - **If yes,** proposed Zoning Classification(s): _____
2. **Is a zoning text amendment proposed with this project?** ☒ **Yes** ☐ **No** Yes, will be provided at a future date.
   - **If yes,** provide a copy of the proposed text amendment with this application

3. **If property is zoned M-1 or M-2, indicate the Occupancy Type pursuant to the Use and Occupancy Classification specified in Chapter 3 of the 2006 International Building Code (2006 IBC). Include all that apply and associated square footage for each classification:**

- ☐ **Factory Group F-1 (Moderate-hazard)** _____ sq ft
- ☐ **Factory Group F-2 (Low-hazard)** _____ sq ft
- ☐ **Storage Group S-1 (Moderate-hazard)** _____ sq ft
- ☐ **Storage Group S-2 (Low-hazard)** _____ sq ft
- ☐ **Business Group B** _____ sq ft
- ☐ **High-Hazard Group H*** _____ sq ft
- ☒ **Other** Shell Bldg. 424,164 sq ft
- ☐ **Other** _____ _____ sq ft

If Use and Occupancy Classification is High-Hazard Group H please provide a detailed written narrative that explains the specific use, quantity of storage and handling of the high hazard materials along with appropriate MSSD sheets with this application.

PUBLIC SERVICES:

1. **Is the property serviced by Public Sanitary Sewer?** ☒ **YES** ☐ **NO**
   - **If no,** the closest public sewer is located at _____
2. **Is the property serviced by Public Water?** ☒ **YES** ☐ **NO**
   - **If no,** the closest public water is located at _____
3. **Maximum number of gallons/minute of water expected to be used per day is:** TBD.

THIS APPLICATION IS FOR A: (check one)

- ☐ **Preliminary Site and Operational Plan:** An applicant may apply for preliminary site and operational plan approval in connection with an erosion control permit application for early mass grading, or in connection with an early foundation permit, or for other good cause shown
- ☒ **New Site and Operational Plan** (FINAL S&O)
- ☐ **Amendment to an existing Site and Operational Plan**
  - **Date of initial site and operational plan approval:** _____
  - **Date of each approved amendment:** _____

SECTION 2: EXISTING USES AND BUILDINGS ON THE SITE

Are there any existing buildings on the site? ☐ **YES** ☒ **NO**

- **If yes,** provide an attachment that explains the current uses on the property and current uses in each building and if the use(s) is proposed to continue; and the gross floor area and height of each building.
- **If no,** what is the current use of the property? Agricultural

SECTION 3: PHOTOGRAPHS

Standard-sized photographs (not Polaroid) showing all aspects of the site (e.g. locations of proposed improvements, bodies of navigable water, wetlands, wooded areas, etc.) and of the exterior of structures or other site improvements, together with a statement regarding each photograph, which includes the date the photograph was taken, the location from which it was taken, the direction in which the camera was pointed, and a description of what is shown in the photograph. With respect to all existing signs, the applicant shall file photographs of all existing signs and shall specify in the written statement accompanying each such photograph and show the dimensions of such sign. Digital images are acceptable.

SECTION 4: CONDITIONAL USE

1. **Does the proposed project require a Conditional Use Permit?** ☐ **YES** ☒ **NO**

   - **If no** then skip to Section 5.
   - **If yes**, then continue with this Section.

2. **Are you amending an existing Conditional Use Permit?** ☐ **YES** ☐ **NO**

   N/A

   - **If yes**, provide a copy of the Conditional Use Grant Document you are proposing to amend.
   - **If no**, continue with this Section.

3. If you answered **YES** to either question 1 or 2 above then this application shall include information as to how the proposed project will not impair an adequate supply of light and air to adjacent properties; increase danger of fire; cause traffic congestion or traffic circulation problems; create storm water flooding or drainage; create obnoxious odors, problems or otherwise endanger the public health, safety or welfare; will not hinder, harm or distract the provision of public services; and that the proposed project is not inherently inconsistent with either the district in which it is located or adjoining districts or neighborhoods as required pursuant to the Village Zoning Ordinance.

   N/A

SECTION 5: NON-CONFORMING USE

1. **Is any use on the site a nonconforming use?** ☐ **YES** ☒ **NO**

   - **If no**, then skip to Section 7.
   - **If yes**, then continue with this section.

2. If you answered **YES** to question 1 above, prima facie proof of each element of legal nonconforming use status shall be submitted to the Village with this application (i.e. that the nonconforming use was legal in its inception, that the use was active and actual and not merely casual, occasional, incidental or accessory when it became nonconforming, that the use has been continuous with no gap of 12 or more consecutive months since it became nonconforming, that no building or structure housing the nonconforming use has been structurally repaired or altered to the extent of fifty (50) percent or more of its assessed value since the use became nonconforming, and that the use has not been changed in nature or physically extended or expanded since becoming nonconforming).

SECTION 6: PERFORMANCE STANDARDS

Pursuant to the Village Zoning Ordinance, any application for a permit under this ordinance or any use subject to the regulations and standards set forth in the Village Zoning Ordinance shall be accompanied by a sworn statement by the owner of the subject property that said property and use will be operated in accordance with the performance standards set forth in Section 420-38 of the Village Ordinance. Continued compliance with the regulations and standards is required. Violations of such standards shall remedied as required by the Village Zoning Ordinance.

No land or building in any district shall be operated in such a manner so as to create any dangerous, injurious, noxious or otherwise objectionable fire, explosive or other hazard; noise or vibration, smoke, dust, dirt or other form of air pollution; water pollution; electrical, radioactive or other disturbances; glare; or other substance, condition or element (referred to herein as "dangerous or objectionable elements") in such amount as to adversely affect the surrounding area or premises; provided that any use permitted by this ordinance may be undertaken and maintained if it conforms to the regulations of this subsection limiting dangerous and objectionable elements at the specified point or points of the determination of their existence.

The Village may require additional information be submitted to ensure that the Village Performance Standards are being met.

SECTION 7: PLAN COMPONENTS

The application shall include a list of all documents, materials or information that are attached to and a part of the application form. Submit eight (8) full-sized and one (1) set reduced to 11" x 17" of all plans and other attachments shall be included as part of this application, except if a component has been waived or deferred in writing by the Village Zoning Administrator. **For specific details related to each of the required information and plans see the attachment entitled "*Plan Components and Related Standards*" in Section 420-57 of the Village Zoning Ordinance.**

- ☒ Application—Applicant, Site, Use, Project and Plan Information
- ☒ Application fee
- ☐ Operational plan → Previously provided with Preliminary SIO Submittal.
- ☒ Title sheet
- ☒ Survey
- ☒ Site plan
- ☒ Grading and drainage plan
- ☒ Building and fire protection plans → (Hydrant Coverage + conceptual exterior loop)
- ☒ Lighting plan
- ☒ Landscape and open space plan
- ☐ Signage plan
- ☐ Industrial/commercial waste survey → To be provided by future tenant
- ☐ Performance standards compliance
- ☐ Additional requirements, as determined by the Village Zoning Administrator, other appropriate Village staff members, or the Village Plan Commission, as appropriate.

Two or more plans may be combined, provided that all of the information submitted on the combined plan is clearly legible, but in no case shall the combined plans fail to show any of the information required for each individual plan as described below, unless such information is waived or deferred pursuant to the Zoning Ordinance.

SECTION 8: SIGNATURES

I,(We), hereby certify that all the above statements and all attachments submitted herewith are true and correct to the best of my knowledge. In addition I, (we) understand the requirements and procedures for Site and Operational Plan/Conditional Use Permit approval.

PROPERTY OWNER: MAJESTIC REALTY CO.

Name: JOHN R. BURROUGHS
(Please Print)

Signature: John R. Burroughs

Address: 13191 CROSSROADS PKWY N, 6TH FL

CITY OF INDUSTRY CA 91746
(City) (State) (Zip)

Phone: 562-948-4380

Fax: 562-699-4796

E-mail: jburroughs@commercelp.com

Date 4/25/16

APPLICANT:

Name: _____
(Please Print)

Signature: _____

Address: _____

_____
(City) (State) (Zip)

Phone: _____

Fax: _____

E-mail: _____

Date: _____

Is the applicant the owner of the property? ☒ **YES** ☐ **NO**

If no, then either proof of the applicant's legal interest in the subject real property (e.g. accepted offer to purchase, lease, etc., which may be appropriately redacted to preserve confidential information) or written authorization signed by the owner for the applicant to act as the owner's agent in connection with the application shall be included with the application.

DEVELOPER (if Applicable)

Name: _____
(Please Print)

Signature: _____

Address: _____

_____
(City) (State) (Zip)

Phone: _____

Fax: _____

E-mail: _____

Date _____

USER OR OCCUPANT OF SITE:

Name: _____
(Please Print)

Signature: _____

Address: _____

_____
(City) (State) (Zip)

Phone: _____

Fax: _____

E-mail: _____

Date: _____

MAJESTIC REALTY CO.

13191 Crossroads Parkway North, Sixth Floor ◆ City of Industry, CA 91746-3497
Office (562) 692-9581 ◆ FAX (562) 695-2329

Village of Pleasant Prairie
Ms. Jean Werbie-Harris
9915 39th Avenue
Pleasant Prairie, WI 53158

March 21, 2016

Re: Site and Operational Plan Submittal
Majestic Badger Logistics Center, Pleasant Prairie, WI

Dear Ms. Werbie-Harris:

The following items are submitted in support of our Site and Operational Plan for the above referenced project. This Site and Operational Plan is for a "Shell Building". We understand that once we have a tenant or tenants identified that we would need to come back to the Village for Site and Operational Plan review and approval specific to the particular tenant(s) use.

(a) **Detailed narrative:**
Design and construction of a 424,176 SF Shell Warehouse Building as indicated on the submitted plans. This Site and Operational Plan is only for the Shell Building and related site improvements.

(b) **Detailed description of the project:**
The project is a shell warehouse building and related sitework. The site has been designed so that the building can be easily divided into as many as four tenants. The building design is a "cross dock" facility with trailer storage as indicated on the plans. The design provides for "secured" truck courts in the event that future tenants require that feature. Majestic has coordinated closely with the Village to provide ongoing access to the Village's sanitary sewer line that runs through the site in a Village easement. Landscaping has been designed to provide screening where appropriate.

(c) **Gross floor area:**
The proposed buildings has a gross floor area of 424,176 square feet. The amount of future offices is TBD.

(d) **Anticipated hours of operation, hours open to public and hours of deliveries/shipments:**
TBD based on the actual tenant(s)

(e) **Anticipated startup and total number of full & part time employees:**
TBD based on the actual tenant(s)

(f) **Anticipated numbers of shifts & employees per shift:**
TBD based on the actual tenant(s)

(g) **Maximum number of employees on site at any time:**
TBD based on the actual tenant(s)

(h) **Number of students, participants or persons to be gathered in assembly:**
Not applicable

(i) **Number of parking spaces required and method of calculation:**
Final number of required parking spaces will be determined based on the actual tenants(s). However, the number of parking spaces that have been provided in anticipation of our future tenants is indicated on the site plan.

(j) **Number of parking spaces provided:**
111 trailer parking spaces and 292 automobile parking spaces.

(k) **Anticipated number of automobile trips:**
TBD based on actual tenant(s)

(l) Anticipated daily average and maximum number of trucks to and from the site
TBD based on actual tenant(s)

(m) Types of materials to be stored on site:
TBD based on actual tenant(s)

(n) Type of equipment or machinery to be used on site:
TBD based on actual tenant(s)

(o) Type of solid or liquid waste which will require removal from the site:
TBD based on actual tenant(s)

(p) Method of handling waste:
Dumpster removal

(q) Method of providing site and building security:
Tenant will provide site and building security based on their operational needs.

(r) Method used to maintain building and site:
All outside maintenance will be handled by the building owner (Majestic Realty Co.). All interior maintenance will be provided by the Tenant.

(s) Description of adverse impacts to neighboring properties and measures to mitigate impact:
Impact to the north will be primarily aesthetic. Planned mitigation includes a berm at the north end of the site with landscaping (trees) on the berm. In addition, a fence is planned along the north property line to provide security to and from the northern property. Impact to the west will be primarily aesthetic and increased truck traffic. Aesthetic impact is being mitigated with significant landscaping along the project frontage. In addition, the building will sit below the street elevation due to the grades on the site. Truck traffic impact is being mitigated with the addition of acceleration and deceleration lane at the project entry. There are no impacts to the east and south.

(t) List of all local, county, state and federal permits for the project:
Local: Erosion Control Permit, Site & Operational Plan Approval, Certified Survey Map Approval, Developer's Agreement, Stipulated Shoreland, Footings & Foundation, Building Permit, Planned Unit Development to resolve setback at southwest corner of site.
County: Access Permit, Utility Permit
State: Water Resources for Project Permitting (WRAPP), Chapter 30 – Stormwater Pond within 500-ft of an OHWM, DSPS: Fire Protection Footings & Foundations, Exterior Plumbing, Building,
Federal: FEMA CLOMR AND LOMR for Floodplain Boundary Adjustment.

Please feel free to contact me at (562) 948-4380 with any questions.

Sincerely,

John R. Burroughs
Vice-President

Cc: John Semcken, Majestic Realty Co.
Taylor Talt, Majestic Realty Co.
Eric Scheler, Commerce Construction Co., L.P.
Adam Artz, Pinnacle Engineering

ONSITE CIVIL ENGINEERING INFRASTRUCTURE PLANS

FOR

MAJESTIC BADGER LOGISTICS CENTER

PLEASANT PRAIRIE, WISCONSIN

PLANS PREPARED
FOR

MAJESTIC REALTY COMPANY

13191 CROSSROAD PARKWAY | SIXTH FLOOR
CITY OF INDUSTRY, CA 91746

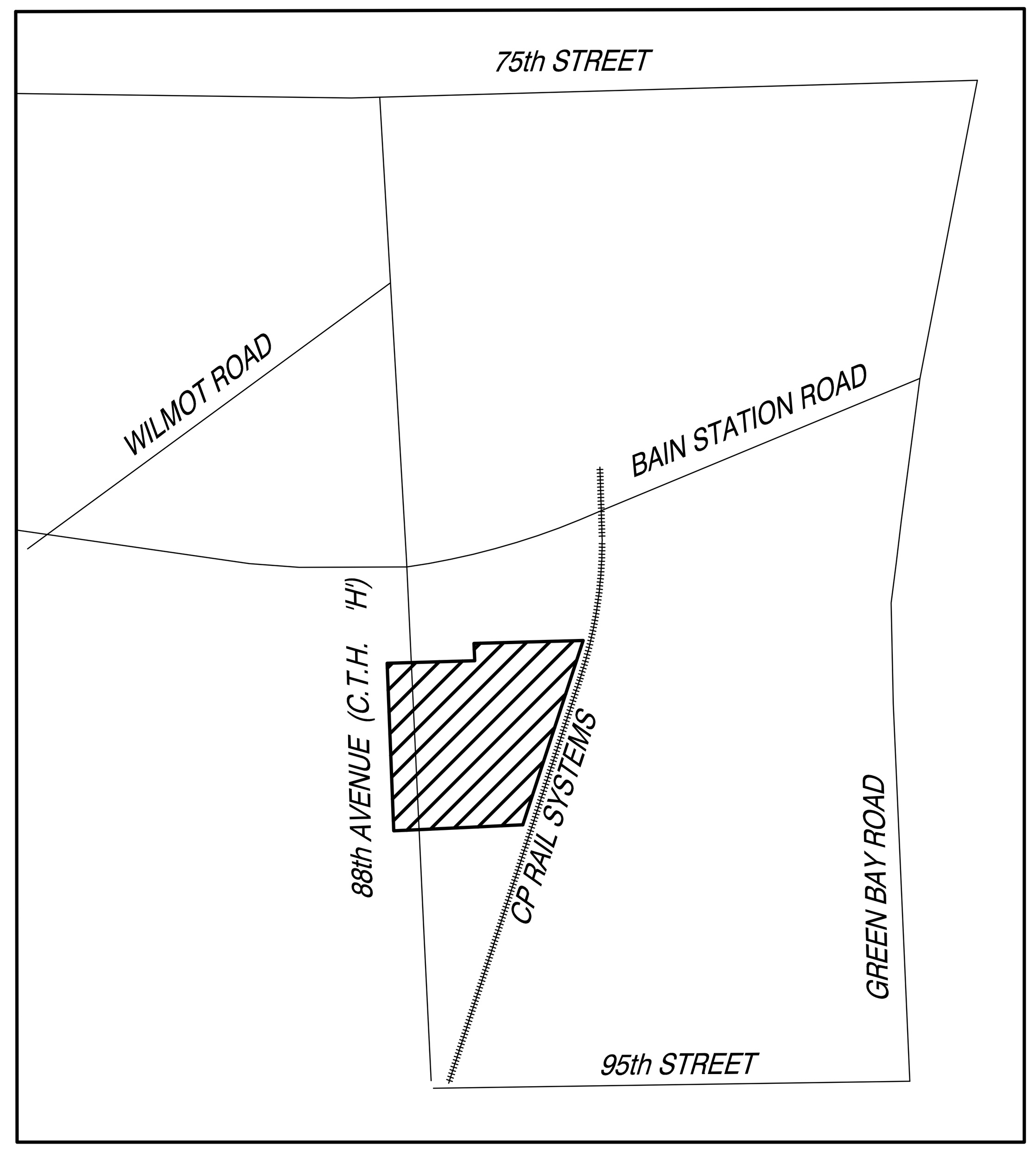

LOCATION MAP

LEGEND

	EXISTING	PROPOSED
SANITARY SEWER MANHOLE		
STORM SEWER MANHOLE		
STORM SEWER CATCH BASIN (ROUND CASTING)		
STORM SEWER CATCH BASIN (RECTANGULAR CASTING)		
PRECAST FLARED END SECTION		
CONCRETE HEADWALL		
VALVE BOX		
FIRE HYDRANT		
CLEANOUT		
SANITARY SEWER		
FORCE MAIN		
STORM SEWER		
DRAIN TILE		
WATER MAIN		
FIRE PROTECTION		FP
UTILITY CROSSING		X
GRANULAR TRENCH BACKFILL		
LIGHTING		
ELECTRICAL CABLE	E	E
OVERHEAD WIRES	OHW	OHW
GAS MAIN	G	G
TELEPHONE LINE	T	T
CAUTION EXISTING UTILITIES NEARBY		CAUTION
ELECTRICAL TRANSFORMER OR PEDESTAL	E	
POWER POLE		
POWER POLE WITH LIGHT		
GUY WIRE		
STREET SIGN		
CONTOUR	749	749
SPOT ELEVATION	×(750.00)	750.00
WETLANDS	WET	
PRIMARY ENVIRONMENTAL CORRIDOR	PEC	
FLOODWAY		
FLOODPLAIN		
HIGH WATER LEVEL (HWL)		
NORMAL WATER LEVEL (NWL)		
DIRECTION OF SURFACE FLOW		GRASS / PAVEMENT
DITCH OR SWALE		
DIVERSION SWALE		
OVERFLOW RELIEF ROUTING		
TREE WITH TRUNK SIZE	6" / 6"	
SOIL BORING	B-0	B-1
TOPSOIL PROBE	T-0	T-1
FENCE LINE, TEMPORARY SILT	SF	SF
FENCE LINE, WIRE		
FENCE LINE, WOOD OR PLASTIC		
FENCE LINE, CHAIN LINK OR IRON		
CONCRETE SIDEWALK		
CURB AND GUTTER		
DEPRESSED CURB		
REVERSE PITCH CURB & GUTTER		
EASEMENT LINE		
RETAINING WALL		

ABBREVIATIONS

BL	BASE LINE	NWL	NORMAL WATER LEVEL
C	LONG CHORD OF CURVE	PC	POINT OF CURVATURE
C & G	CURB AND GUTTER	PT	POINT OF TANGENCY
CB	CATCH BASIN	PVI	POINT OF VERTICAL INTERSECTION
CL	CENTERLINE	R	RADIUS
D	DEGREE OF CURVE	ROW	RIGHT-OF-WAY
EP	EDGE OF PAVEMENT	SAN	SANITARY SEWER
FF	FINISHED FLOOR	ST	STORM SEWER
FG	FINISHED GRADE	T	TANGENCY OF CURVE
FL	FLOW LINE	TB	TOP OF BANK
FP	FLOODPLAIN	TC	TOP OF CURB
FR	FRAME	TF	TOP OF FOUNDATION
FW	FLOODWAY	TP	TOP OF PIPE
HWL	HIGH WATER LEVEL	TS	TOP OF SIDEWALK
INV	INVERT	TW	TOP OF WALK
L	LENGTH OF CURVE	WM	WATER MAIN
MH	MANHOLE	△	INTERSECTION ANGLE

NOT FOR CONSTRUCTION
FOR REVIEW ONLY

REVIEWED: MC
DESIGNED: AS
DRAFTED: DC

EXPIRATION DATE: JULY 31, 2016

DIGGERS HOTLINE
Toll Free (800) 242-8511
Milwaukee Area (414) 259-1181
Hearing Impaired TDD (800) 542-2289
www.DiggersHotline.com

PINNACLE ENGINEERING GROUP, LLC
ENGINEER'S LIMITATION

PINNACLE ENGINEERING GROUP, LLC AND THEIR CONSULTANTS DO NOT WARRANT OR GUARANTEE THE ACCURACY AND COMPLETENESS OF THE DELIVERABLES HEREIN BEYOND A REASONABLE DILIGENCE. IF ANY MISTAKES, OMISSIONS, OR DISCREPANCIES ARE FOUND TO EXIST WITHIN THE DELIVERABLES, THE ENGINEER SHALL BE PROMPTLY NOTIFIED PRIOR TO BID SO THAT HE MAY HAVE THE OPPORTUNITY TO TAKE WHATEVER STEPS NECESSARY TO RESOLVE THEM. FAILURE TO PROMPTLY NOTIFY THE ENGINEER OF SUCH CONDITIONS SHALL ABSOLVE THE ENGINEER FROM ANY RESPONSIBILITY FOR THE CONSEQUENCES OF SUCH FAILURE. ACTIONS TAKEN WITHOUT THE KNOWLEDGE AND CONSENT TO THE ENGINEER, OR IN CONTRADICTION TO THE ENGINEER'S DELIVERABLES OR RECOMMENDATIONS, SHALL BECOME THE RESPONSIBILITY NOT OF THE ENGINEER BUT OF THE PARTIES RESPONSIBLE FOR TAKING SUCH ACTION.

FURTHERMORE, PINNACLE ENGINEERING GROUP, LLC IS NOT RESPONSIBLE FOR CONSTRUCTION SAFETY OR THE MEANS AND METHODS OF CONSTRUCTION.

CONTACTS:

CIVIL ENGINEER:
ADAM ARTZ, P.E. / MATT CAREY, P.E.
PINNACLE ENGINEERING GROUP
15850 BLUEMOUND ROAD, SUITE 310
BROOKFIELD, WI 53005
(262) 754-8888

APPLICANT:
ALI A. ZARE, VICE PRESIDENT
COMMERCE CONSTRUCTION CO., L.P.
13191 CROSSROADS PKWY NORTH | 6TH FLOOR
CITY OF INDUSTRY, CA 91746
(323)816-0290

ARCHITECT:
JIM ROBERTSON, A.I.A., VICE PRESIDENT
COMMERCE CONSTRUCTION CO., L.P.
13191 CROSSROADS PKWY NORTH | 6TH FLOOR
CITY OF INDUSTRY, CA 91746
OFFICE: (323)816-0290
EMAIL: JRobertson@commercelp.com

PUBLIC UTILITY CONTACTS:

AMERICAN TRANSMISSION COMPANY:
BRIAN MCGEE
OFFICE: 262-506-68955
EMAIL: bmcgee@atcllc.com
EMERGENCY NUMBER: (800) 972-5341

WISCONSIN D.O.T.:
KEVIN KOEHNKE,
PERMITS COORDINATOR SOUTHEAST REGION
OFFICE: (262) 548-5891
EMAIL: kevin.koehnke@dot.wi.gov

AT&T:
MIKE TOYEK
OFFICE: 262-636-0549
EMAIL: mt1734@att.com

TDS TELECOM:
SOUTHEAST WISCONSIN
OFFICE: 877-483-7142

TIME WARNER CABLE:
STEVE CRAMER
UTILITY COORDINATOR
OFFICE: 414-277-4045
EMAIL: steve.cramer@twcable.com
EMERGENCY NUMBER: (800) 627-2288

WE-ENERGIES:
LINDA SCHREIER
KENOSHA SOUTH
262-552-3228
linda.schreier@we-energies.com

NATURAL GAS EMERGENCY:
800-261-5325
ELECTRICAL EMERGENCY:
800-662-4797

GOVERNING AGENCY CONTACTS:

PLEASANT PRAIRIE VILLAGE HALL:
9915 39TH STREET
PLEASANT PRAIRIE, WI 53158
OFFICE: (262) 694-1400

COMMUNITY DEVELOPMENT DEPARTMENT:
JEAN WERBIE-HARRIS, DIRECTOR
PLANNER, ZONING ADMINISTRATOR
OFFICE: (262) 925-6718
EMAIL: jwerbie-harris@plprairiewi.com

PEGGY HERRICK
ASSISTANT PLANNER & ZONING ADMINISTRATOR
OFFICE: (262) 925-6716
EMAIL: pherrick@plprairiewi.com

ENGINEERING DEPARTMENT:
MATT FINEOUR, P.E.
VILLAGE ENGINEER
OFFICE: (262) 925-6778
EMAIL: mfineour@plprairiewi.com

KURT DAVIDSEN, P.E.
ASSISTANT VILLAGE ENGINEER
OFFICE: (262) 925-6728
EMAIL: kdavidsen@plprairiewi.com

PUBLIC WORKS DEPARTMENT:
JOHN STEINBRINK, JR.,
SUPERINTENDENT
ROGER PRANGE MUNICIPAL BUILDING
8600 GREEN BAY ROAD
OFFICE: (262) 925-6768
EMAIL: jsteinbrink@plprairie.com

JESSE HOULE, P.E.
CONSTRUCTION MANAGER
OFFICE: (262) 948-8945
EMAIL: jhoule@plprairiewi.com

STEVE WLAHOVICH
ENGINEERING TECHNICIAN
OFFICE: (262) 925-6767
EMAIL: swlahovich@plprairie.com

BUILDING INSPECTION DEPARTMENT:
SANDRO PEREZ
BUILDING INSPECTION SUPERINTENDENT
OFFICE: (262) 694-9304
DIRECT: (262) 925-6722
EMAIL: sperez@plprairie.com

DONALD KOEHNE
BUILDING INSPECTOR
OFFICE: (262) 694-9304
EMAIL: dkoehne@plprairiewi.com

MICHAEL KAPRELIAN
BUILDING INSPECTOR
OFFICE: (262) 694-9304
EMAIL: rnichols@plprairiewi.com

FIRE & RESCUE DEPARTMENT:
DOUG McELMURY,
CHIEF OF FIRE & RESCUE
8044 88TH AVENUE
OFFICE: (262) 694-8027
EMAIL: fireandrescue@plprairie.com

CRAIG ROEPKE
DEPUTY CHIEF
DIRECT: (262) 948-8981
EMAIL: croepke@plprairiewi.com

THOMAS CLARK
LIEUTENANT
DIRECT: (262) 948-8982
EMAIL: tclark@plprairiewi.com

WI DEPARTMENT OF NATURAL RESOURCES:
ELAINE JOHNSON
WATER RESOURCE SPECIALIST
OFFICE: 262-884-2136
EMAIL: elaine.johnson@wisconsin.gov

PETER WOOD
WATER RESOURCES ENGINEER
OFFICE: 262-884-2360
EMAIL: peter.wood@wisconsin.gov

GENERAL NOTES

□□ TH□ I□T□□TI□□ □□ TH□ PLA□□ A□D □P□CI□ICATI□□□ I□ T□ □□T □□RTH P□R□□RMA□C□ A□D C□□□TR□CTI□□ MAT□RIAL □TA□DARD□ □□R TH□ PR□P□R □□□C□TI□□ □□ □ □R□□ALL □ □R□□ C□□TAI□□D □ITHI□ TH□ PLA□□ A□D □P□CI□ICATI□□□ □HALL □□ C□MPL□T□D I□ ACC□RDA□C□ □ITH ALL R□□□IR□M□□T□ □R□M L□CAL, □TAT□, □□D□RAL □R □TH□R □□□□R□I□□ A□□□C□□ LA□□, R□□□LATI□□□, □□RI□DICTI□□AL □RDI□A□C□□C□D□□R□L□□□TC, A□D TH□ □□ □□R□ DIR□CTI□□□

□□ A □□□T□CH□ICAL R□P□RT HA□ □□□□ PR□PAR□D □□ □IL□□ □□□I□□□RI□□ A□□□CIAT□□,DAT□D □□PT□M□□R □□, □□□□, □□R TH□ PR□□□CT □IT□□TH□ DATA □□ □□□□□R□AC□ □□IL C□□DITI□□□ I□ □□T I□T□□D□D A□ A R□PR□□□□TATI□□ □R □ ARRA□T□ □□ TH□ C□□TI□□IT□ □□ □□CH C□□DITI□□□ □□T□ □□□ □□RI□□□ □R I□DICAT□D □AMPLI□□ L□CATI□□□□IT □HALL □□ □□PR□□□L□ □□D□R□T□□D THAT □□ □□R □ILL □□T □□ R□□P□□□I□L□ □□R A□□ I□T□RPR□TATI□□□ □R C□□CL□□I□□□ DRA□□ TH□R□ □R□M □□ TH□ C□□TRACT□R□DATA I□ MAD□ A□AILA□L□ □□R TH□ C□□□□□I□□C□ □□ TH□ C□□TRACT□R□TH□ C□□TRACT□R I□ R□□P□□□I□L□ □□R P□R□□RMI□□ A□□ ADDITI□□AL □□IL□ I□□□□TI□ATI□□□ TH□□ □□□L I□ □□C□□□AR□ □□R TH□ PR□P□R □□AL□ATI□□ □□ TH□ □IT□ □□R P□RP□□□□ □□ PLA□□I□□, □IDDI□□, □R C□□□TR□CTI□□ TH□ PR□□□CT AT □□ ADDITI□□AL C□□T T□ TH□ □□ □□R□

□□ TH□ C□□TRACT□R I□ R□□P□□□I□L□ T□ R□□I□□ A□D □□D□R□TA□D ALL C□MP□□□□T□ □□ TH□ PLA□□ A□D □P□CI□ICATI□□□, I□CL□DI□□ □I□LD □□RI□I□□ □□IL C□□DITI□□□, PRI□R T□ □□□MI□□I□□ □□ A □ID PR□P□□AL□

□□ TH□ C□□TRACT□R □HALL PR□MPTL□ R□P□RT A□□ □RR□R□ □R AM□I□□ITI□□ L□AR□□D A□ PART □□ TH□IR R□□I□□ □□ PLA□□, □P□CI□ICATI□□□, R□P□RT□ A□D □I□LD I□□□□TI□ATI□□□□

□□ TH□ C□□TRACT□R I□ □□L□L□ R□□P□□□I□L□ □□R TH□ C□MP□TATI□□ □□ □□A□TITI□□ A□D □ □R□ R□□□IR□D T□ C□MPL□T□ THI□ PR□□□CT□TH□ C□□TRACT□R□□ □ID □HALL □□ □A□□D □□ IT□ □□ □ C□MP□TATI□□□ A□D I□ □□ □□CH I□□TA□C□ R□L□ □□ TH□ □□□I□□□R□□ □□TIMAT□□

□□ □□□□TI□□□□CLARI□ICATI□□□ □ILL □□ I□T□RPR□T□D □□ □□□I□□□R□□□□R PRI□R T□ TH□ A□ARD □□ C□□TRACT □□□I□□□R□□ □□R □ILL □□□MIT □□□ICIAL R□□P□□□□□ I□ □ RITI□□□I□T□RPR□TATI□□□ PR□□□□T□D I□ □□□ICIAL R□□P□□□□□ □HALL □□ □I□DI□□ □□ ALL PARTI□□ A□□□CIAT□D □ITH TH□ C□□TRACT□I□ □□ □A□ □HALL □ □RD□□□M□□TH DIAL□□ C□□□TITI□T□ A□ □□□ICIAL R□□P□□□□□

□□ PRI□R T□ □TART □□ □ □R□, C□□TRACT□R □HALL □□ C□MPL□T□L□ □AMILIAR □ ITH ALL C□□DITI□□□ □□ TH□ □IT□, A□D □HALL ACC□□□□T □□R C□□DITI□□□ THAT A□□□CT, □R MA□ A□□□CT C□□□TR□CTI□□ I□CL□DI□□, □□T □□T LIMIT□D T□, LIMITATI□□□ □□ □ □R□ ACC□□□, □PAC□ LIMITATI□□□, □□□RH□AD □□□TR□CTI□□□, TRA□□IC PATT□R□□, L□CAL R□□□IR□M□□T□, AD□AC□□T ACTI□ITI□□, □TC□□AIL□R□ T□ C□□□ID□R □IT□ C□□DITI□□□ □HALL □□T □□ CA□□□ □□R CLAIM □□ □□□ □□TRA□□

□□ C□MM□□C□M□□T □□ C□□□TR□CTI□□ □HALL □□PLICITL□ C□□□IRM THAT TH□ C□□TRACT□R HA□ R□□I□□□D TH□ PLA□□ A□D □P□CI□ICATI□□□ I□ □□TIR□T□ A□D C□RTI□I□□ THAT TH□IR □□□MITT□D □ID PR□P□□AL C□□TAI□□ PR□□I□I□□□ T□ C□MPL□T□ TH□ PR□□□CT, □ ITH TH□ □□C□PTI□□ □□ □□□□□R□□□□□ □I□LD C□□DITI□□□□ALL APPLICA□L□ P□RMIT□ HA□□ □□□□ □□TAI□□D A□D C□□TRACT□R □□D□R□TA□D□ ALL □□ TH□ R□□□IR□M□□T□ □□ TH□ PR□□□CT□

□□ □H□□LD A□□ DI□CR□PA□CI□□ □R C□□□LICT□ I□ TH□ PLA□□ □R □P□CI□ICATI□□□ □□ DI□C□□□R□D A□T□R TH□ A□ARD □□ C□□TRACT, □□□I□□□R □HALL □□ □□TI□I□D I□ □RITI□□ IMM□DIAT□L□ A□D C□□□TR□CTI□□ □□ IT□M□ A□□□CT□D □□ TH□ DI□CR□PA□CI□□□C□□□LICT□ □HALL □□T C□MM□□C□, □R C□□TI□□□, □□TIL A □RITT□□ R□□P□□□□ □R□M □□□I□□□R□□ □□R I□ DI□TRI□□T□D□I□ TH□ □□□□T □□ A C□□□LICT □□T□ □□□ R□□□R□□C□D C□D□□, □TA□DARD□, □P□CI□ICATI□□□ A□D PLA□□, TH□ □□□ □□TA□LI□HI□□ TH□ M□□T □TRI□□□□T R□□□IR□M□□T□ □HALL □□ □□LL□□ □D□

□□□ TH□ C□□TRACT□R □HALL, AT IT□ □□□ □□P□□□□, □□TAI□ ALL □□C□□□AR□ P□RMIT□ A□D LIC□□□□□ T□ C□MPL□T□ TH□ PR□□□CT□□□TAI□I□□ P□RMIT□, □R D□LA□□, I□ □□T CA□□□ □□R D□LA□ □□ TH□ C□□TRACT □R □CH□D□L□□C□□TRACT□R □HALL C□MPL□ □ ITH ALL P□RMIT R□□□IR□M□□T□□

□□□ TH□ C□□TRACT□R □HALL □□TI□□ ALL I□T□R□□T□D □□□□R□I□□ A□□□CI□□, □TILIT□ C□MPA□I□□ A□□□CT□D □□ THI□ C□□□TR□CTI□□ PR□□□CT, A□D DI□□□R□ H□TLI□□ I□ AD□A□C□ □□ C□□□TR□CTI□□ T□ C□MPL□ □ ITH ALL □□RI□DICTI□□AL □RDI□A□C□□C□D□□□R□L□□□TC, P□RMIT □TIP□LATI□□□, A□D □TH□R APPLICA□L□ □TA□DARD□□

□□□ □A□□T□ I□ TH□ □□L□ R□□P□□□I□ILIT□ □□ TH□ C□□TRACT□R□TH□ C□□TRACT□R □HALL □□ R□□P□□□I□L□ T□ I□ITIAT□, I□□TIT□T□, □□□□RC□, MAI□TAI□, A□D □□P□R□I□□ ALL □A□□T□ PR□CA□TI□□□ A□D □□□ □IT□ □A□□T□ PR□□RAM□ I□ C□□□□CTI□□ □ ITH TH□ □ □R□□

□□□ C□□TRACT□R □HALL □□□P TH□ □□□□IT□ CL□A□ A□D □RD□RL□ AT ALL TIM□□□ALL L□CATI□□□ □□ TH□ □IT□ □HALL □□ □□PT I□ A □ □R□I□□ MA□□□R □□CH THAT D□□RI□ I□ R□M□□□□D C□□TI□□□□□L□ A□D ALL R□□P□CTI□□ C□□TRACT□R□ □P□RAT□ UNDER GENERAL "GOOD HOUSEKEEPING."

□□□ TH□ C□□TRACT□R □HALL I□D□M□I□□ TH□ □□ □□R, □□□I□□□R, A□D TH□IR A□□□T□ □R□M ALL LIA□ILIT□ I□□□L□□D □ ITH TH□ C□□□TR□CTI□□, I□□TALLATI□□, A□D T□□TI□□ □□ TH□ □ □R□ □□ THI□ PR□□□CT□

□□□ PRI□R T□ C□□□TR□CTI□□, A PR□C□□□TR□CTI□□ C□□□R□□C□ M□□T □□ H□LD AT TH□ □ILLA□□ □□□IC□□□ TH□ PR□C□□□TR□CTI□□ C□□□R□□C□ □HALL □□ □CH□D□L□D A□D M□D□RAT□D □□ TH□ D□□I□□ □□□I□□□R □□ R□C□RD□

INDEX OF SHEETS

C-1	COVER SHEET
C-2	EXISTING CONDITIONS
C-3 - C-5	SITE DIMENSIONAL AND PAVING PLAN
C-6 - C-9	GRADING PLAN
C-10 - C-12	UTILITY PLAN
C-13 - C-16	SITE STABILIZATION PLAN
C-17 - C-30	CONSTRUCTION DETAILS
C-31 - C-33	RETAINING WALL PROFILE
C-34	CTH H GRADING AND DRAINAGE PLAN
C-35	CTH H PAVEMENT MARKING AND SIGNAGE PLAN
DT-1 - DT-3	UTILITY DRAIN TILE PLAN

REQUIRED SUBMITTALS FOR APPROVAL

1. **HOT MIX ASPHALT** - MIX DESIGN
2. **CONCRETE PAVEMENTS (EXTERIOR)** - MIX DESIGN & JOINT PLAN
3. **PAVEMENT STONE BASE COURSE** - GRADATION
4. **PIPE BEDDING & TRENCH BACKFILL** - GRADATION
5. **MANHOLE BACKFILL** - GRADATION
6. **PAVEMENT MARKING PAINT**

REQUIRED SUBMITTALS FOR RECORDS

1. WATER MAIN PIPES, VALVES, HYDRANTS & FITTINGS
2. SANITARY SEWER PIPE & FITTINGS
3. STORM SEWER PIPE, STRUCTURES, & FITTINGS
4. TRACER WIRE
5. UNDERGROUND UTILITY LOCATION RECORD DRAWINGS
6. ADA SIGN & TRUNCATED DOMES, PAINT & STENCILS
7. CHEMICAL SOIL STABILIZATION MIX DESIGN (IF APPLICABLE)

MAJESTIC BADGER LOGISTICS CENTER DATA

SITE AREA:	88.0 AC
DISTURBED AREA:	32.7 AC
BUILDING FOOTPRINT AREA:	9.7 AC (424,164 S.F.)
ADDED CAR PARKING SPACES:	282 SPACES (12 A.D.A.)
ADDED TRAILER PARKING SPACES:	110
PAVEMENT AREA:	11.1 AC
IMPERVIOUS AREA:	21.7 AC
GREEN SPACE:	7.4 AC (25%)
ZONING DISTRICT:	M-2
(PLEASANT PRAIRIE)	

BENCHMARKS

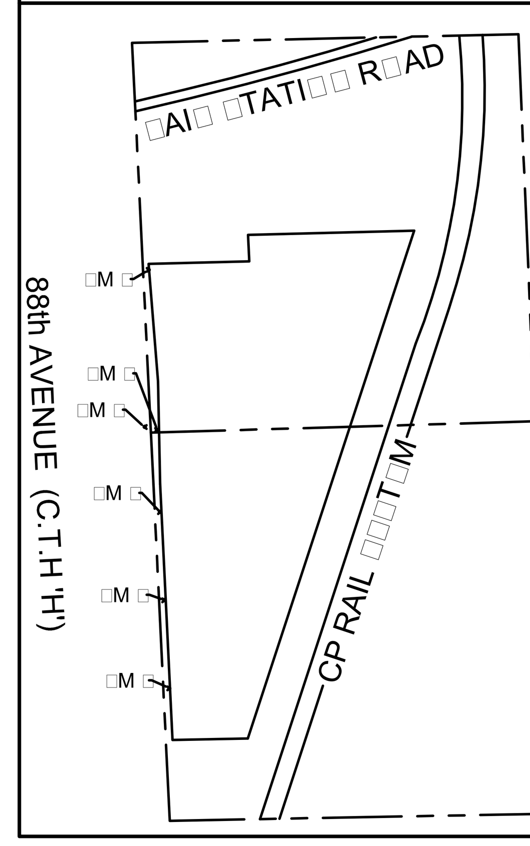

BENCHMARK 1: NW FLANGE ON HYDRANT
ELEVATION = 697.11

BENCHMARK 2: NW FLANGE ON HUDRANT
ELEVATION = 694.94

BENCHMARK 3: NW FLANGE ON HYDRANT
ELEVATION = 694.24

BENCHMARK 4: NW FLANGE ON HUDRANT
ELEVATION = 691.82

BENCHMARK 5: NW FLANGE ON HYDRANT
ELEVATION = 691.81

BENCHMARK 6: NW FLANGE ON HYDRANT
ELEVATION = 705.66

PLAN I DESIGN I DELIVER
www.pinnacle-engr.com

PINNACLE ENGINEERING GROUP
ENGINEERING I NATURAL RESOURCES I SURVEYING

WISCONSIN OFFICE:
15850 W. BLUEMOUND ROAD
BROOKFIELD, WI 53005
(262) 754-8888
CHICAGO I MILWAUKEE : NATIONWIDE

MAC
MAC
MAC
MAC

C□MM□RC□ C□□□TR□CTI□□ C□□,L.P□
Cit□ □□ Indu□tr□, Cali□□rnia
Licen□e

C□□□R □H□□T
MA□□□TIC □AD□□R L□□I□TIC□ C□□T□R
CTH "H" □ILLA□□ □□ PL□A□A□T PRAIRI□, □I

DRA□ □ □□ DAT□
P□□,LLC
CCC □□□ □□□
□H□□T □□□
C□□

LEGEND

SANITARY MANHOLE	⊙	STORM SEWER	
STORM MANHOLE	◎	WATER MAIN	
CATCH BASIN	○	LIGHTING	
INLET	□	ELECTRICAL CABLE	
PRECAST FLARED END SECTION	◁	ELECTRICAL TRANSFORMER OR PEDESTAL	E
CONCRETE HEADWALL		POWER POLE	
VALVE VAULT	⊗	POWER POLE WITH LIGHT	
VALVE BOX		GUY WIRE	
FIRE HYDRANT		STREET SIGN	
BUFFALO BOX		GAS MAIN	
CLEANOUT		TELEPHONE LINE	
SANITARY SEWER		CONTOUR	749
FORCE MAIN		TREE WITH TRUNK SIZE	6" 6"
CONCRETE SIDEWALK		EASEMENT LINE	
EXISTING WETLANDS			

EXISTING CONDITIONS SURVEY:

[illegible] *CONTRACTOR SHALL UNDERTAKE NECESSARY EFFORTS TO VERIFY THE EXISTING CONDITIONS PRIOR TO THE START OF MATERIAL PROCUREMENT AND CONSTRUCTION EFFORTS/ACTIVITIES*

CONTRACTOR RESPONSIBILITY:

THE INFORMATION SHOWN ON THIS DRAWING CONCERNING TYPE AND LOCATION OF UNDERGROUND UTILITIES IS NOT GUARANTEED TO BE ACCURATE OR ALL INCLUSIVE. THE CONTRACTOR IS RESPONSIBLE FOR MAKING HIS OWN DETERMINATIONS AS TO THE TYPE AND LOCATION OF UNDERGROUND UTILITIES AS MAY BE NECESSARY TO AVOID DAMAGE THERETO. IF ADDITIONAL UTILITIES ARE KNOWN TO EXIST IN THE PROPERTY, THE OWNER WILL PROVIDE EXISTING PLANS OF OTHER UTILITIES SERVING THE SITE AND THE BUILDING THAT OTHERWISE CANNOT BE LOCATED BY A VISUAL OBSERVATION OF THE PROPERTY OR OF WHICH THE SURVEYOR WOULD HAVE NO KNOWLEDGE.

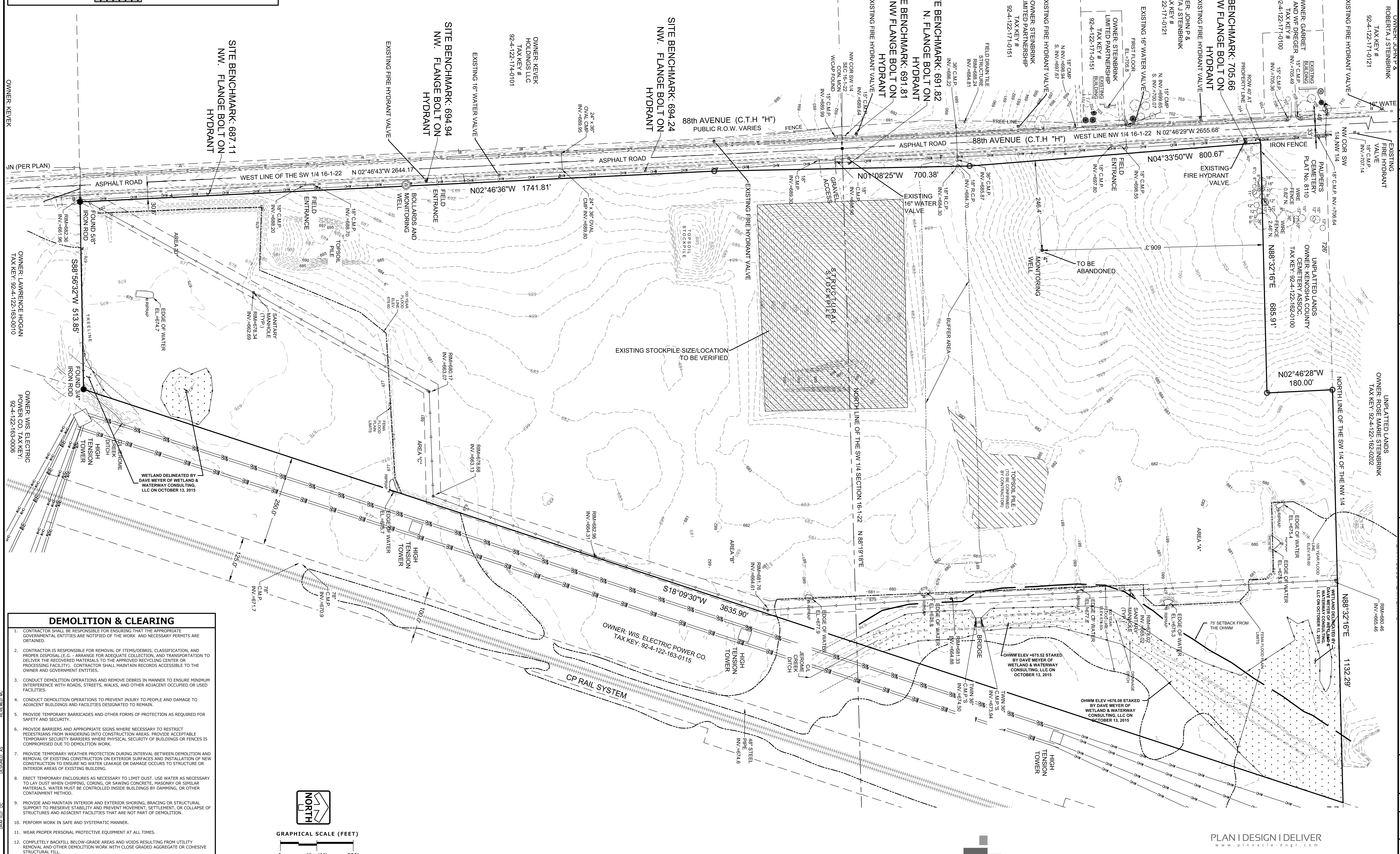

DEMOLITION & CLEARING

1. CONTRACTOR SHALL BE RESPONSIBLE FOR ENSURING THAT THE APPROPRIATE GOVERNMENTAL ENTITIES ARE NOTIFIED OF THE WORK AND NECESSARY PERMITS ARE OBTAINED.
2. CONTRACTOR IS RESPONSIBLE FOR REMOVAL OF ITEMS/DEBRIS, CLASSIFICATION, AND PROPER DISPOSAL.(E.G. - ARRANGE FOR ADEQUATE COLLECTION, AND TRANSPORTATION TO DELIVER THE RECOVERED MATERIALS TO THE APPROVED RECYCLING CENTER OR PROCESSING FACILITY). CONTRACTOR SHALL MAINTAIN RECORDS ACCESSIBLE TO THE OWNER AND GOVERNMENT ENTITIES.
3. CONDUCT DEMOLITION OPERATIONS AND REMOVE DEBRIS IN MANNER TO ENSURE MINIMUM INTERFERENCE WITH ROADS, STREETS, WALKS, AND OTHER ADJACENT OCCUPIED OR USED FACILITIES.
4. CONDUCT DEMOLITION OPERATIONS TO PREVENT INJURY TO PEOPLE AND DAMAGE TO ADJACENT BUILDINGS AND FACILITIES DESIGNATED TO REMAIN.
5. PROVIDE TEMPORARY BARRICADES AND OTHER FORMS OF PROTECTION AS REQUIRED FOR SAFETY AND SECURITY.
6. PROVIDE BARRIERS AND APPROPRIATE SIGNS WHERE NECESSARY TO RESTRICT PEDESTRIANS FROM WANDERING INTO CONSTRUCTION AREAS. PROVIDE ACCEPTABLE TEMPORARY SECURITY BARRIERS WHERE PHYSICAL SECURITY OF BUILDINGS OR FENCES IS COMPROMISED DUE TO DEMOLITION WORK.
7. PROVIDE TEMPORARY WEATHER PROTECTION DURING INTERVAL BETWEEN DEMOLITION AND REMOVAL OF EXISTING CONSTRUCTION ON EXTERIOR SURFACES AND INSTALLATION OF NEW CONSTRUCTION TO ENSURE NO WATER LEAKAGE OR DAMAGE OCCURS TO STRUCTURE OR INTERIOR AREAS OF EXISTING BUILDING.
8. ERECT TEMPORARY ENCLOSURES AS NECESSARY TO LIMIT DUST. USE WATER AS NECESSARY TO LAY DUST WHEN CHIPPING, CORING, OR SAWING CONCRETE, MASONRY OR SIMILAR MATERIALS. WATER MUST BE CONTROLLED INSIDE BUILDINGS BY DAMMING, OR OTHER CONTAINMENT METHOD.
9. PROVIDE AND MAINTAIN INTERIOR AND EXTERIOR SHORING, BRACING OR STRUCTURAL SUPPORT TO PRESERVE STABILITY AND PREVENT MOVEMENT, SETTLEMENT, OR COLLAPSE OF STRUCTURES AND ADJACENT FACILITIES THAT ARE NOT PART OF DEMOLITION.
10. PERFORM WORK IN SAFE AND SYSTEMATIC MANNER.
11. WEAR PROPER PERSONAL PROTECTIVE EQUIPMENT AT ALL TIMES.
12. COMPLETELY BACKFILL BELOW-GRADE AREAS AND VOIDS RESULTING FROM UTILITY REMOVAL AND OTHER DEMOLITION WORK WITH CLOSE GRADED AGGREGATE OR COHESIVE STRUCTURAL FILL.
13. REPAIR DEMOLITION PERFORMED IN EXCESS OF THAT REQUIRED.
14. PRIOR TO DEMOLITION, ALL SPECIFIC EROSION & SEDIMENT CONTROL PRACTICES SHALL BE INSTALLED.

NORTH

GRAPHICAL SCALE (FEET)
0 1" = 100' 200'

DRAFTED: DC DESIGNED: AS REVIEWED: MC

PLAN I DESIGN I DELIVER
www.pinnacle-engr.com

PINNACLE ENGINEERING GROUP
ENGINEERING I NATURAL RESOURCES I SURVEYING

WISCONSIN OFFICE:
15850 W. BLUEMOUND ROAD
BROOKFIELD, WI 53005
(262) 754-8888
CHICAGO I MILWAUKEE : NATIONWIDE

This Document, Either as Drawing or the Assemblage of Electronic Data, is the Property of Commerce Construction Co., L.P. ("Commerce") [illegible] without the written consent of Commerce. This document [illegible] without warranty of any kind either expressed or implied. [illegible] and completeness. Commerce is not responsible for [illegible] document. The acceptance or use of this document will [illegible]

[illegible]	MAC	DAT[illegible]	
ADDR[illegible] [illegible]ILLA[illegible] C[illegible]MM[illegible]T[illegible]	MAC		
ADDR[illegible] [illegible]ILLA[illegible] C[illegible]MM[illegible]T[illegible]	MAC		
ADDR[illegible] [illegible]ILLA[illegible] C[illegible]MM[illegible]T[illegible]	MAC		
R[illegible]	[illegible]	DAT[illegible]	

C[illegible]MM[illegible]RC[illegible] C[illegible]TR[illegible]CTI[illegible] C[illegible], L.P.
Telephone [illegible]
License [illegible]

[illegible]

CTH "H" [illegible]ILLA[illegible] PL[illegible]A[illegible]T PRAIRI[illegible]

Drawing Plot Bar [illegible]

DRA[illegible] DAT[illegible]
P[illegible], LLC

CCC [illegible] A

[illegible]H[illegible]T [illegible]

C[illegible]

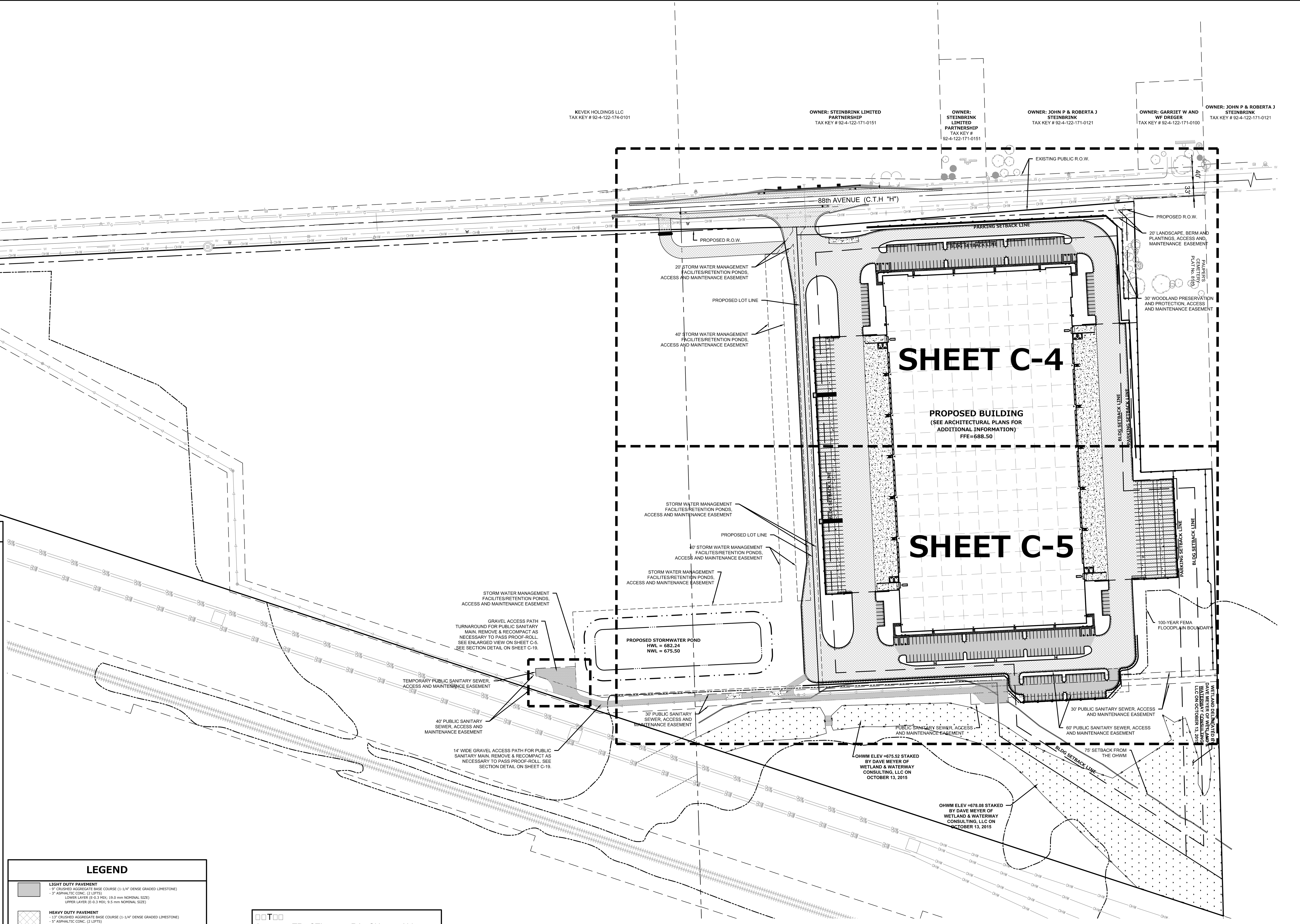

NOTES

1. ALL DIMENSIONS ARE FACE OF CURB TO FACE OF CURB OR BUILDING FOUNDATION UNLESS NOTED OTHERWISE. ALL UTILITY DIMENSIONS ARE TO OUTSIDE OF PIPE OR CENTER OF STRUCTURE UNLESS OTHERWISE NOTED. ALL PAVING DIMENSIONS ARE TO FACE OF CURB OR TO EDGE OF PAVEMENT; EXCEPT FOR THE SETBACK FROM PARKING LOTS, MANEUVERING LANES AND FIRE ACCESS LANES, WHERE THE SETBACK IS MEASURED FROM THE BACK OF CURB TO THE PROPERTY LINE.
2. ALL PROPOSED CURB AND GUTTER SHALL BE 18" STANDARD CURB AND GUTTER (SEE DETAIL). UNLESS OTHERWISE NOTED. CURB AND GUTTER DRAINING AWAY FROM THE FACE OF CURB IS NOTED AS REVERSE CURB AND GUTTER.
3. ALL RADII ARE MEASURED TO FACE OF CURB UNLESS NOTED OTHERWISE.
4. BUILDING DIMENSIONS AND ADJACENT PARKING AND UTILITY LAYOUT HAVE BEEN PREPARED BASED UPON ARCHITECTURAL INFORMATION CURRENT AT THE DATE OF THIS DRAWING. SUBSEQUENT ARCHITECTURAL CHANGES MAY EXIST. THEREFORE CONTRACTOR SHALL REFER TO ARCHITECTURAL PLANS FOR PRECISE BUILDING DIMENSIONS AND EXACT UTILITY ENTRANCE LOCATIONS AND NOTIFY THE ARCHITECT AND ENGINEER OF ANY DISCREPANCIES PRIOR TO CONSTRUCTION.
5. THE CONTRACTOR SHALL CONTACT DIGGERS HOTLINE (1-800-242-8511) PRIOR TO ANY WORK TO LOCATE UTILITIES AND SHALL CONTACT THE OWNER SHOULD UTILITIES APPEAR TO BE IN CONFLICT WITH THE PROPOSED IMPROVEMENT.
6. IMPROVEMENTS ADJACENT TO BUILDING IF SHOWN SUCH AS TRUCK DOCK, RETAINING WALLS, SIDEWALKS, CURBING, FENCES, CANOPIES, RAMPS, HANDICAP ACCESS, PLANTERS, DUMPSTERS, AND TRANSFORMERS ETC. HAVE BEEN SHOWN FOR APPROXIMATE LOCATION ONLY. REFER TO ARCHITECTURAL PLANS FOR EXACT LOCATIONS, SPECIFICATIONS, AND DETAILS.
7. REFER TO ELECTRICAL PLANS FOR LIGHTING LOCATIONS, SPECIFICATIONS, AND DETAILS.
8. SEE ADDITIONAL NOTES AND DETAILS ON SITE DIMENSIONAL PLANS AND CONSTRUCTION DETAILS.
9. ALL PAVING SHALL CONFORM TO STATE OF WISCONSIN STANDARD SPECIFICATIONS FOR HIGHWAY & STRUCTURE CONSTRUCTION AND APPLICABLE VILLAGE OF PLEASANT PRAIRIE ORDINANCES, AND SPECIFICATIONS CONTAINED WITHIN THIS PLAN SET.
10. CONTRACTOR SHALL CONSULT STRIPING COLOR WITH OWNER PRIOR TO CONSTRUCTION.
11. PROVIDE CONTRACTOR GRADE ACRYLIC, STRIPING PAINT FOR NEW ASPHALT OR COATED ASPHALT. APPLY MARKING PAINT AT A RATE OF ONE (1) GALLON PER THREE TO FOUR HUNDRED (300-400) LINEAL FEET OF FOUR (4) INCH WIDE STRIPES OR TO MANUFACTURER'S SPECIFICATION, WHICHEVER IS GREATER.
12. THOROUGHLY CLEAN SURFACES FREE OF DIRT, SAND, GRAVEL, OIL AND OTHER FOREIGN MATTER. CONTRACTOR RESPONSIBLE TO INSPECT EXISTING PAVEMENT SURFACES FOR CONDITIONS AND DEFECTS THAT WILL ADVERSELY AFFECT QUALITY OF WORK, AND WHICH CANNOT BE PUT INTO AN ACCEPTABLE CONDITION THROUGH NORMAL PREPARATORY WORK AS SPECIFIED.
13. DO NOT PLACE MARKING OVER UNSOUND PAVEMENTS. IF THESE CONDITIONS EXIST, NOTIFY OWNER. STARTING INSTALLATION CONSTITUTES CONTRACTOR'S ACCEPTANCE OF SURFACE AS SUITABLE FOR INSTALLATION.
14. LAYOUT MARKINGS USING GUIDE LINES, TEMPLATES AND FORMS. STENCILS AND TEMPLATES SHALL BE PROFESSIONALLY MADE TO INDUSTRY STANDARDS. "FREE HAND" PAINTING OF ARROWS, SYMBOLS, OR WORDING SHALL NOT BE ALLOWED. APPLY STRIPES STRAIGHT AND EVEN.
15. PROTECT ADJACENT CURBS, WALKS, FENCES, AND OTHER ITEMS FROM RECEIVING PAINT.
16. BARRICADE MARKED AREAS DURING INSTALLATION AND UNTIL THE MARKING PAINT IS DRIED AND READY FOR TRAFFIC.
17. ASPHALTIC CONCRETE PAVING SPECIFICATIONS-

    CODES AND STANDARDS: THE PLACING, CONSTRUCTION AND COMPOSITION OF THE ASPHALTIC BASE COURSE AND ASPHALTIC CONCRETE SURFACING SHALL BE IN ACCORDANCE WITH THE REQUIREMENTS OF SECTIONS 450, 455, 460 AND 465 OF THE STATE OF WISCONSIN STANDARD SPECIFICATIONS FOR HIGHWAY AND STRUCTURE CONSTRUCTION, EDITION OF 2016. HEREAFTER, THIS PUBLICATION WILL BE REFERRED TO AS THE STATE HIGHWAY SPECIFICATIONS.

    WEATHER LIMITATIONS: APPLY TACK COATS WHEN AMBIENT TEMPERATURE IS ABOVE 50° F (10° C) AND WHEN TEMPERATURE HAS NOT BEEN BELOW 35° F (1° C) FOR 12 HOURS IMMEDIATELY PRIOR TO APPLICATION. DO NOT APPLY WHEN BASE IS WET OR CONTAINS EXCESS OF MOISTURE. CONSTRUCT ASPHALTIC CONCRETE SURFACE COURSE WHEN ATMOSPHERIC TEMPERATURE IS ABOVE 40° (4°C) AND WHEN BASE IS DRY AND WHEN WEATHER IS NOT RAINY. BASE COURSE MAY BE PLACED WHEN AIR TEMPERATURE IS ABOVE 30° F (-1° C).

    GRADE CONTROL: ESTABLISH AND MAINTAIN REQUIRED LINES AND ELEVATIONS FOR EACH COURSE DURING CONSTRUCTION.

    CRUSHED AGGREGATE BASE COURSE: THE TOP LAYER OF BASE COURSE SHALL CONFORM TO SECTIONS 301 AND 305, STATE HIGHWAY SPECIFICATIONS.

    BINDER COURSE AGGREGATE: THE AGGREGATE FOR THE BINDER COURSE HALL CONFORM TO SECTIONS 460.2.7 AND 315, STATE HIGHWAY SPECIFICATIONS.

    SURFACE COURSE AGGREGATE: THE AGGREGATE FOR THE SURFACE COURSE SHALL CONFORM TO SECTIONS 460.2.7 AND 465, STATE HIGHWAY SPECIFICATIONS.

    ASPHALTIC MATERIALS: THE ASPHALTIC MATERIALS SHALL CONFORM TO SECTION 455 AND 460, STATE HIGHWAY SPECIFICATIONS.

    SURFACE PREPARATION: NOTIFY CONTRACTOR OF UNSATISFACTORY CONDITIONS. DO NOT BEGIN PAVING WORK UNTIL DEFICIENT SUBBASE AREAS HAVE BEEN CORRECTED AND ARE READY TO RECEIVE PAVING.

DRAFTED: DC DESIGNED: AS REVIEWED: MC

LEGEND

LIGHT DUTY PAVEMENT
- 9" CRUSHED AGGREGATE BASE COURSE (1-1/4" DENSE GRADED LIMESTONE)
- 3" ASPHALTIC CONC. (2 LIFTS)
  - LOWER LAYER (E-0.3 MIX; 19.0 mm NOMINAL SIZE)
  - UPPER LAYER (E-0.3 MIX; 9.5 mm NOMINAL SIZE)

HEAVY DUTY PAVEMENT
- 13" CRUSHED AGGREGATE BASE COURSE (1-1/4" DENSE GRADED LIMESTONE)
- 5" ASPHALTIC CONC. (2 LIFTS)
  - LOWER LAYER (E-1 TYPE; 19.0 mm NOMINAL SIZE)
  - UPPER LAYER (E-1 TYPE; 12.5 mm NOMINAL SIZE)

CONCRETE PAVEMENT (TRUCK DOCKS & DOLLY PADS)
- 12" CRUSHED AGGREGATE BASE COURSE (1-1/4" DENSE GRADED LIMESTONE)
- 6" PCC (4000 PSI AIR ENTRAINED CONCRETE WITH 6x6x6 GAUGE STEEL MESH)

CONCRETE SIDEWALK
- 6" CRUSHED AGGREGATE BASE COURSE (1-1/4" DENSE GRADED LIMESTONE)
- 5" PCC (6x6 WELDED WIRE FABRIC PER RACI 315-92)

GRAVEL ACCESS ROAD/SHOULDER (SEE DETAIL)

- (A) **4" SOLID WHITE STRIPE**
- (B) **4" DIAGONAL AT 45° SPACED 2' O.C.**
- (C) **R7-8 HANDICAP PARKING SIGN (SEE DETAIL)**
- (D) **15" CURB & GUTTER (SEE DETAIL)**
- (E) **15" REVERSE CURB & GUTTER (SEE DETAIL)**
- (F) **TAPER CURB HEAD (SEE DETAIL)**
- (G) **BUILDING DOOR SLAB (2% MAX SLOPE WITHIN DRIVE IN OR MAN DOOR)**
- (16) **PARKING COUNT (FOR INFORMATION ONLY, NOT TO BE PAINTED)**
- ▶ **MAN DOOR**
- D.I.D ▶ **OVERHEAD DOOR**

NOTE:
ALL CONSTRUCTION TRAILERS, CALLS, TRUCKS, ETC... IN THE CROSS WITHIN THE PROPERTY BOUNDARY SHALL BE REMOVED.

EXISTING CONDITIONS SURVEY:

EXISTING CONDITIONS SURVEY PROVIDED BY CHAPUT LAND SURVEYS, LLC ... AND PINNACLE ... ALTHOUGH PINNACLE ... HAS NO REASON TO BELIEVE THE SURVEY IS INACCURATE, PINNACLE ... WARRANTY OR ... INFORMATION CONTAINED WITHIN THESE PLANS IS ALL INCLUSIVE OR ACCURATE. ***CONTRACTOR SHALL UNDERTAKE NECESSARY EFFORTS TO VERIFY THE EXISTING CONDITIONS PRIOR TO THE START OF MATERIAL PROCUREMENT AND CONSTRUCTION EFFORTS/ACTIVITIES***

NORTH

GRAPHICAL SCALE (FEET)
0 1" = 100' 200'

PLAN I DESIGN I DELIVER
www.pinnacle-engr.com

PINNACLE ENGINEERING GROUP
ENGINEERING I NATURAL RESOURCES I SURVEYING

WISCONSIN OFFICE:
15850 W. BLUEMOUND ROAD
BROOKFIELD, WI 53005
(262) 754-8888
CHICAGO I MILWAUKEE : NATIONWIDE

This Document, Either as Drawing or the Assemblage of Electronic Data, is the Property of Commerce Construction Co., L.P. ("Commerce"). This document, including all electronic data attached therein, cannot be reproduced, distributed, used or presented in any way, in whole or in part, without the written consent of Commerce. This document shall not be taken as a document to be relied upon without warranty of any kind either expressed or implied. Commerce is not responsible for edited or reproduced digital data of this document. The acceptance or use of this document will be construed as an acceptance of the terms.

REVISION		DATE
BID SET		
ADDENDUM ... VILLAGE COMMENTS	MAC	
ADDENDUM ... VILLAGE COMMENTS	MAC	
ADDENDUM ... VILLAGE COMMENTS	MAC	

COMMERCE CONSTRUCTION CO., L.P.
Telephone
License

SITE DIMENSIONAL AND PAVING PLAN
... IMPROVEMENT PLANS FOR
MAGNETIC ... LOGISTICS CENTER
CTH "H" VILLAGE OF PLEASANT PRAIRIE, WI

Drawing Plot Bar
Use this plot bar to confirm drawing has not been reduced or enlarged from original. If this plot bar is not exactly 1 inch long, the physical size of drawing has changed.

DRAWN BY: PEG,LLC DATE

CCC JOB NO.
A

SHEET NO.
C...

LEGEND

LIGHT DUTY PAVEMENT - 9" CRUSHED AGGREGATE BASE COURSE (1-1/4" DENSE GRADED LIMESTONE) - 3" ASPHALTIC CONC. (2 LIFTS) LOWER LAYER (E-0.3 MIX; 19.0 mm NOMINAL SIZE) UPPER LAYER (E-0.3 MIX; 9.5 mm NOMINAL SIZE)	(A) 4" SOLID WHITE STRIPE
HEAVY DUTY PAVEMENT - 13" CRUSHED AGGREGATE BASE COURSE (1-1/4" DENSE GRADED LIMESTONE) - 5" ASPHALTIC CONC. (2 LIFTS) LOWER LAYER (E-1 TYPE; 19.0 mm NOMINAL SIZE) UPPER LAYER (E-1 TYPE; 12.5 mm NOMINAL SIZE)	(B) 4" DIAGONAL AT 45° SPACED 2' O.C.
CONCRETE PAVEMENT (TRUCK DOCK AREA) - 6" CRUSHED AGGREGATE BASE COURSE (1-1/4" DENSE GRADED LIMESTONE) - 12" PCC (4000 PSI AIR ENTRAINED CONCRETE WITH 6x6x6 GAUGE STEEL MESH)	(C) R7-8 HANDICAP PARKING SIGN (SEE DETAIL)
CONCRETE SIDEWALK - 6" CRUSHED AGGREGATE BASE COURSE (1-1/4" DENSE GRADED LIMESTONE) - 5" PCC (6x6 WELDED WIRE FABRIC PER RACI 315-92)	(D) 15" CURB & GUTTER (SEE DETAIL)
GRAVEL ACCESS ROAD/SHOULDER (SEE DETAIL)	(E) 15" REVERSE CURB & GUTTER (SEE DETAIL)
	(F) TAPER CURB HEAD (SEE DETAIL)
	(G) BUILDING DOOR SLAB (2% MAX SLOPE WITHIN DRIVE IN OR MAN DOOR)
	(16) PARKING COUNT (FOR INFORMATION ONLY, NOT TO BE PAINTED)
	MAN DOOR
	D.I.D OVERHEAD DOOR

EXISTING CONDITIONS SURVEY:

□□I□TI□□ C□□DITI□□□ □□R□□□ PR□□ID□D □□ CHAP□T LA□D □□R□□□, LLC □□ □□□□M□□R □□, □□□□A□D PI□□ACL□ □□□I□□□RI□□ □R□□P □□ □□L□ □□, □□□□□ ALTH□□□H PI□□ACL□ □□□I□□□RI□□ □R□□P HA□ □□ R□A□□□ T□ □□LI□□□ TH□ □□R□□□ I□ I□ACC□RAT□, P□□ MA□□□ □□T □ ARRA□T□ □R □□I□TI□□ I□□□RMATI□□ C□□TAI□□D □ ITHI□ TH□□□ PLA□□ I□ ALL□□CL□□I□□ □R ACC□RAT□□ ***CONTRACTOR SHALL UNDERTAKE NECESSARY EFFORTS TO VERIFY THE EXISTING CONDITIONS PRIOR TO THE START OF MATERIAL PROCUREMENT AND CONSTRUCTION EFFORTS/ACTIVITIES***

NOTES

1. SEE OVERALL SITE DIMENSION AND PAVING PLAN SHEET FOR PAVING SPECIFICATIONS AND NOTES.
2. SEE CONSTRUCTION DETAILS SECTION FOR ADDITIONAL INFORMATION PERTAINING TO THE SITE DIMENSIONAL AND PAVING PLAN.

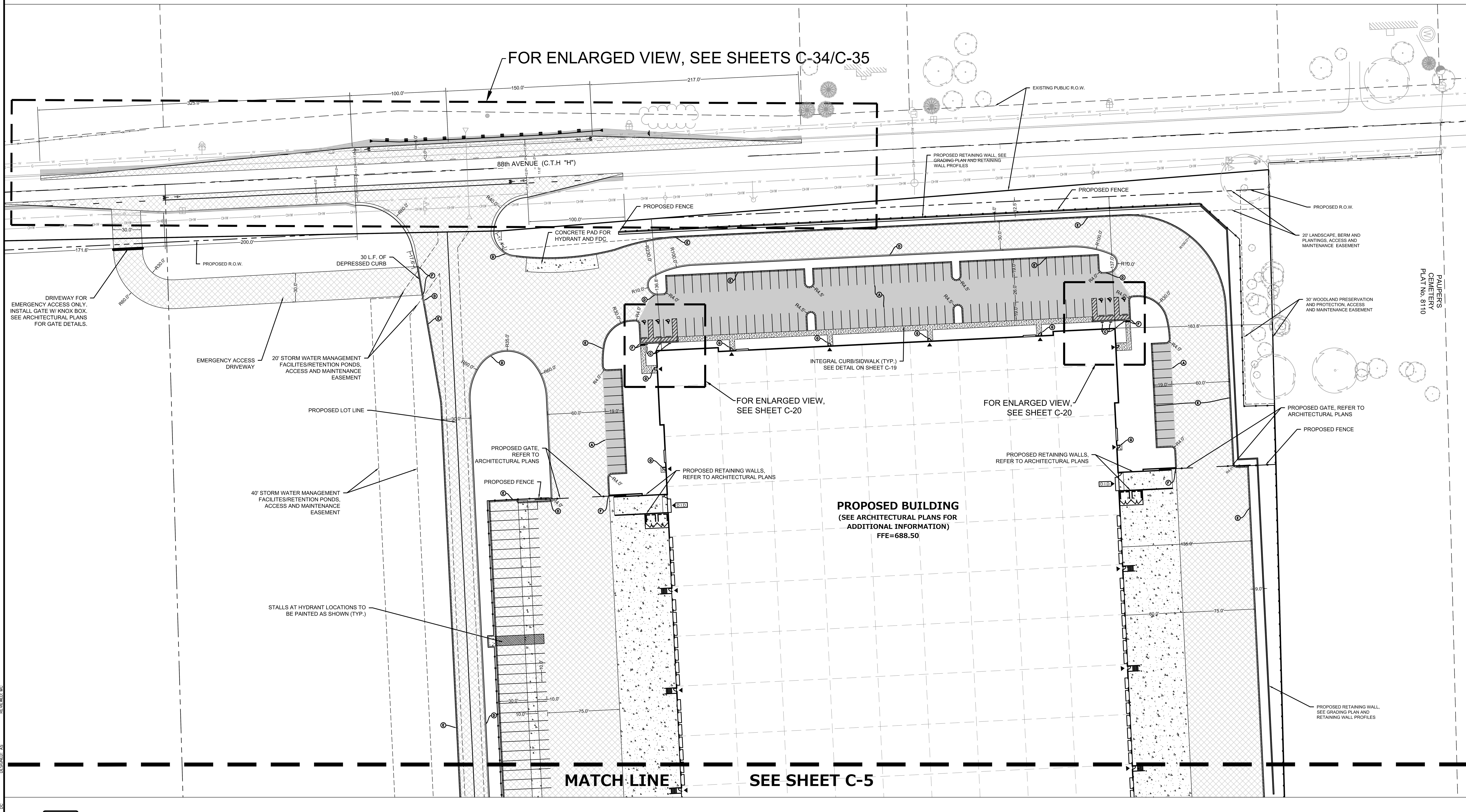

NORTH

GRAPHICAL SCALE (FEET)

0 1" = 40' 80'

DRAFTED: DC DESIGNED: AS REVIEWED: MC

PLAN I DESIGN I DELIVER
www.pinnacle-engr.com

PINNACLE ENGINEERING GROUP
ENGINEERING I NATURAL RESOURCES I SURVEYING

WISCONSIN OFFICE:
15850 W. BLUEMOUND ROAD
BROOKFIELD, WI 53005
(262) 754-8888
CHICAGO I MILWAUKEE : NATIONWIDE

P□□ □□□ □□□□□□□A

This Document, Either as Drawing or the Assemblage of Electronic Data, is the Property of Commerce Construction Co., L.P. ("Commerce") ... without the written consent of Commerce ... without warranty of any kind either expressed or implied ... and completeness. Commerce is not responsible for ... document. The acceptance or use of this document will ...

□ID □□T	MAC		
ADDR□□□ □ILLA□□ C□MM□□T	MAC		
ADDR□□□ □ILLA□□ C□MM□□T	MAC		
ADDR□□□ □ILLA□□ C□MM□□T	MAC		
R□□I□I□□□	□□	DAT□	□□ DAT□

C□MM□RC□ C□□□TR□CTI□□ C□,L.P□
Cr□□rad□ Par□a□□rth
Cit□ □Indu□tr□, Cali□rnia
Tele□h□ne
Licen□e

□IT□ DIM□□□I□□AL A□D PA□I□□ PLA□
□□□I□□□RI□□ IMPR□□□M□□T□ PLA□□ □□R
MA□□□TIC □AD□□R L□□I□TIC C□□T□R
CTH "H" □ILLA□□ □□ PL□A□T PRAIRI□, □I

Dra□in□ Pl□t □ar

DRA□ □ □□ P□□,LLC | DAT□

CCC □□□ □□□
□□□□□□A

□H□□T □□□
C□□

LEGEND

Symbol	Description	Symbol	Description
	LIGHT DUTY PAVEMENT - 9" CRUSHED AGGREGATE BASE COURSE (1-1/4" DENSE GRADED LIMESTONE) - 3" ASPHALTIC CONC. (2 LIFTS) LOWER LAYER (E-0.3 MIX; 19.0 mm NOMINAL SIZE) UPPER LAYER (E-0.3 MIX; 9.5 mm NOMINAL SIZE)	(A)	4" SOLID WHITE STRIPE
		(B)	4" DIAGONAL AT 45° SPACED 2' O.C.
	HEAVY DUTY PAVEMENT - 13" CRUSHED AGGREGATE BASE COURSE (1-1/4" DENSE GRADED LIMESTONE) - 5" ASPHALTIC CONC. (2 LIFTS) LOWER LAYER (E-1 TYPE; 19.0 mm NOMINAL SIZE) UPPER LAYER (E-1 TYPE; 12.5 mm NOMINAL SIZE)	(C)	R7-8 HANDICAP PARKING SIGN (SEE DETAIL)
		(D)	15" CURB & GUTTER (SEE DETAIL)
		(E)	15" REVERSE CURB & GUTTER (SEE DETAIL)
	CONCRETE PAVEMENT (TRUCK DOCKS & DOLLY PADS) - 6" CRUSHED AGGREGATE BASE COURSE (1-1/4" DENSE GRADED LIMESTONE) - 12" PCC (4000 PSI AIR ENTRAINED CONCRETE WITH 6x6x6 GAUGE STEEL MESH)	(F)	TAPER CURB HEAD (SEE DETAIL)
		(G)	BUILDING DOOR SLAB (2% MAX SLOPE WITHIN DRIVE IN OR MAN DOOR)
	CONCRETE SIDEWALK - 6" CRUSHED AGGREGATE BASE COURSE (1-1/4" DENSE GRADED LIMESTONE) - 5" PCC (6x6 WELDED WIRE FABRIC PER RACI 315-92)	◇16	PARKING COUNT (FOR INFORMATION ONLY, NOT TO BE PAINTED)
		▶	MAN DOOR
	GRAVEL ACCESS ROAD/SHOULDER (SEE DETAIL)	D.I.D ▶	OVERHEAD DOOR

EXISTING CONDITIONS SURVEY:

□□I□TI□□ C□□DITI□□□ □□R□□□ PR□□ID□D □□ CHAP□T LA□D □□R□□□, LLC □□ □□□□M□□R □□, □□□□A□D PI□□ACL□ □□□I□□□RI□□ □R□□P □□ □□L□ □□, □□□□□ ALTH□□□H PI□□ACL□ □□□I□□□RI□□ □R□□P HA□ □□ R□A□□□ T□ □□LI□□□ TH□ □□R□□□ I□ I□ACC□RAT□, P□□ MA□□□ □□T □ ARRA□T□ □R □□I□TI□□ I□□□RMATI□□ C□□TAI□□D □ ITHI□ TH□□□ PLA□□ I□ ALL□□CL□□I□□ □R ACC□RAT□□ ***CONTRACTOR SHALL UNDERTAKE NECESSARY EFFORTS TO VERIFY THE EXISTING CONDITIONS PRIOR TO THE START OF MATERIAL PROCUREMENT AND CONSTRUCTION EFFORTS/ACTIVITIES***

NOTES

1. SEE OVERALL SITE DIMENSION AND PAVING PLAN SHEET FOR PAVING SPECIFICATIONS AND NOTES.
2. SEE CONSTRUCTION DETAILS SECTION FOR ADDITIONAL INFORMATION PERTAINING TO THE SITE DIMENSIONAL AND PAVING PLAN.

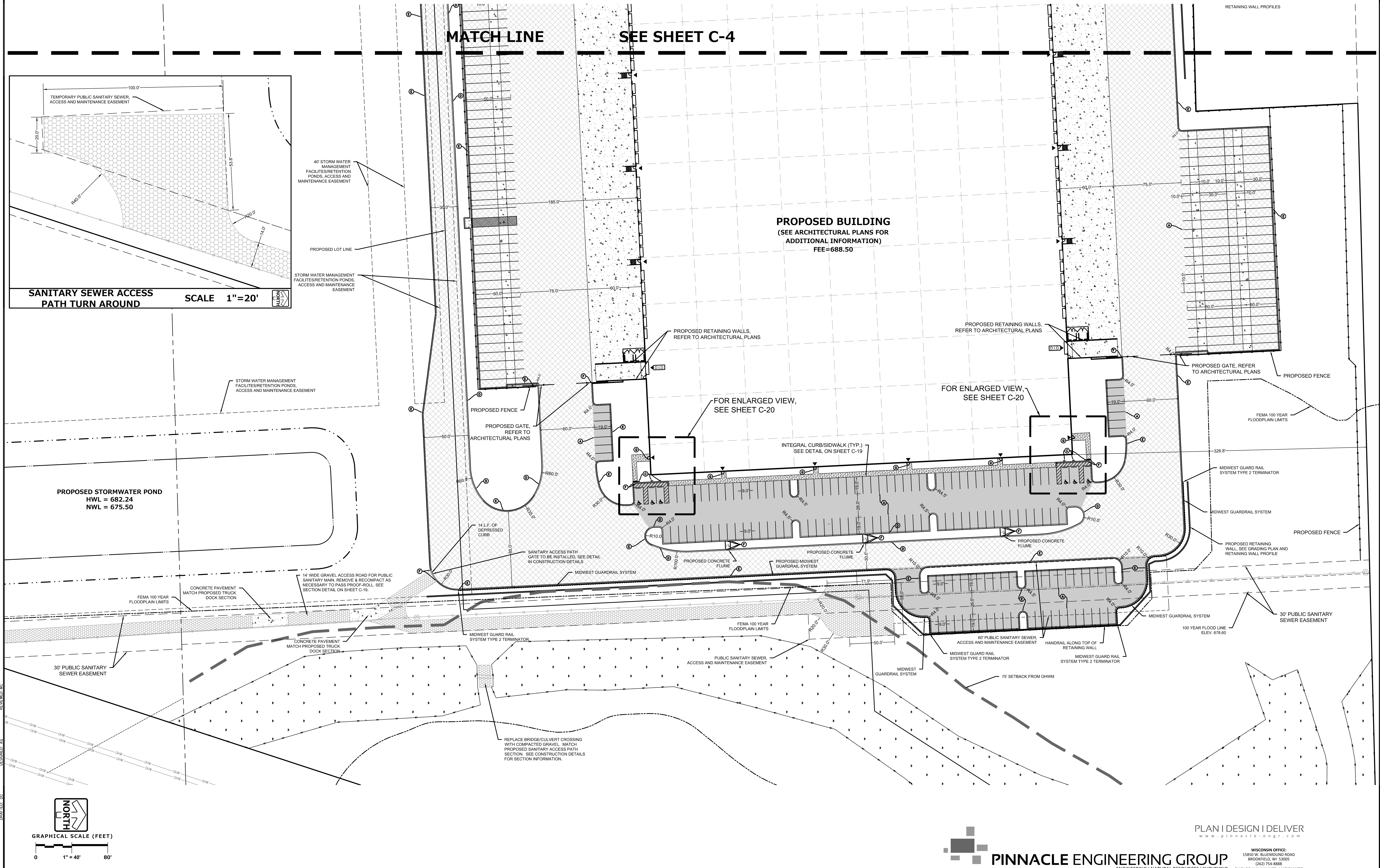

REVIEWED: MC
DESIGNED: AS
DRAFTED: DC

PLAN I DESIGN I DELIVER
www.pinnacle-engr.com

PINNACLE ENGINEERING GROUP
ENGINEERING I NATURAL RESOURCES I SURVEYING

WISCONSIN OFFICE:
15850 W. BLUEMOUND ROAD
BROOKFIELD, WI 53005
(262) 754-8888
CHICAGO I MILWAUKEE : NATIONWIDE

P□□ □□□ □□□□□□□A

This Document, Either as Drawing or the Assemblage of Electronic Data, is the Property of Commerce Construction Co., L.P. ("Commerce")

	REVISION		DATE		REVISION		DATE
	□ID □□T	MAC					
	ADDR□□□ □ILLA□□ C□MM□□T□	MAC					
	ADDR□□□ □ILLA□□ C□MM□□T□	MAC					
	ADDR□□□ □ILLA□□ C□MM□□T□	MAC					

C□MM□RC□ C□□□TR□CTI□□ C□, L.P□

□IT□ DIM□□□I□□AL A□D PA□I□□ PLA□
□□□I□□□RI□□ IMPR□□□M□□T□ PLA□□ □□R
MA□□□TIC □AD□□R L□□I□TIC C□□T□R
CTH "H" □ILLA□□ □□ PL□A□A□T PRAIRI□, □I

DRA□ □ □□ P□□,LLC | DAT□

CCC □□□ □□□
□□□□□□A

□H□□T □□□
C□□

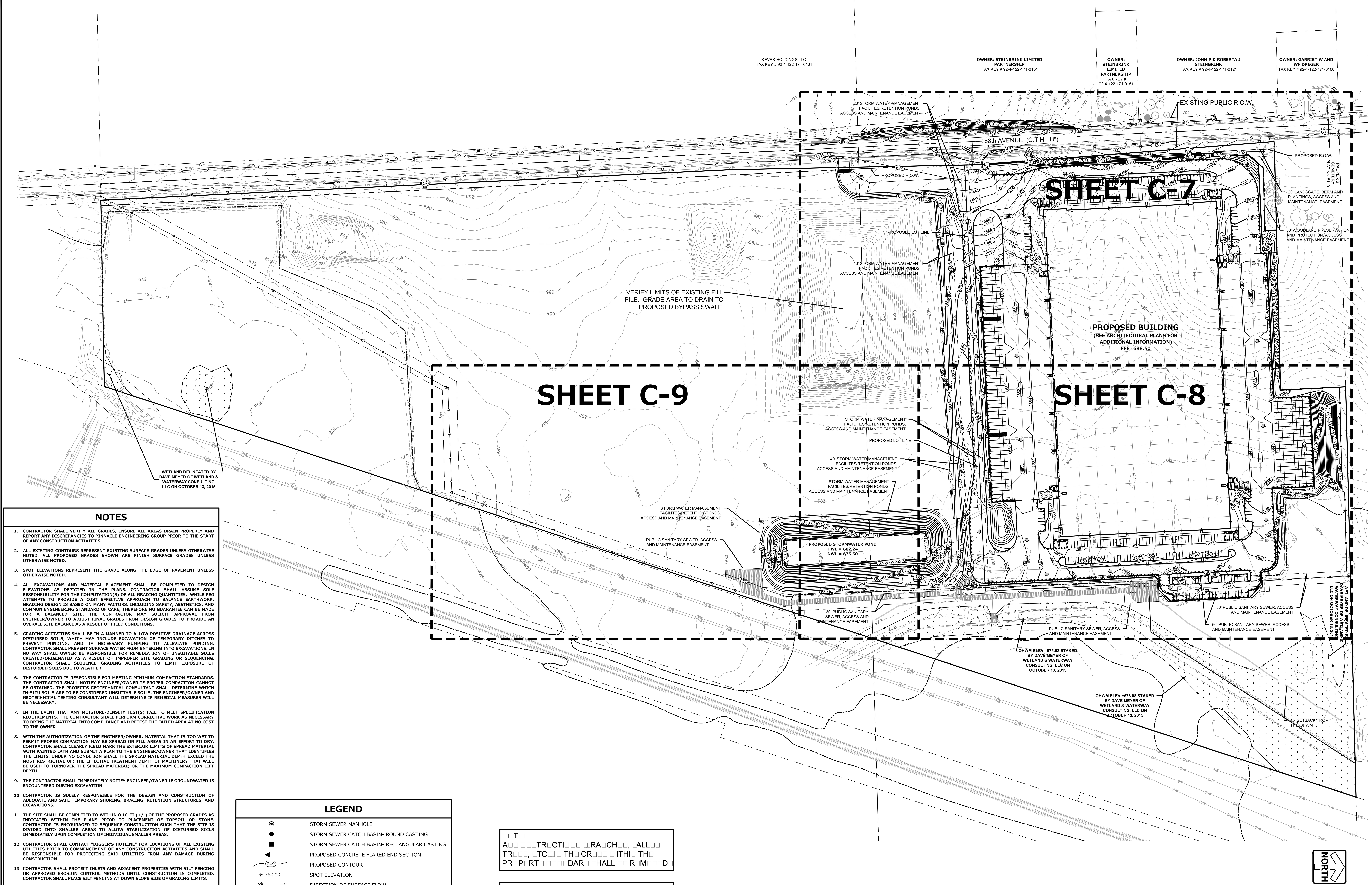

NOTES

1. CONTRACTOR SHALL VERIFY ALL GRADES, ENSURE ALL AREAS DRAIN PROPERLY AND REPORT ANY DISCREPANCIES TO PINNACLE ENGINEERING GROUP PRIOR TO THE START OF ANY CONSTRUCTION ACTIVITIES.
2. ALL EXISTING CONTOURS REPRESENT EXISTING SURFACE GRADES UNLESS OTHERWISE NOTED. ALL PROPOSED GRADES SHOWN ARE FINISH SURFACE GRADES UNLESS OTHERWISE NOTED.
3. SPOT ELEVATIONS REPRESENT THE GRADE ALONG THE EDGE OF PAVEMENT UNLESS OTHERWISE NOTED.
4. ALL EXCAVATIONS AND MATERIAL PLACEMENT SHALL BE COMPLETED TO DESIGN ELEVATIONS AS DEPICTED IN THE PLANS. CONTRACTOR SHALL ASSUME SOLE RESPONSIBILITY FOR THE COMPUTATION(S) OF ALL GRADING QUANTITIES. WHILE PEG ATTEMPTS TO PROVIDE A COST EFFECTIVE APPROACH TO BALANCE EARTHWORK, GRADING DESIGN IS BASED ON MANY FACTORS, INCLUDING SAFETY, AESTHETICS, AND COMMON ENGINEERING STANDARD OF CARE, THEREFORE NO GUARANTEE CAN BE MADE FOR A BALANCED SITE. THE CONTRACTOR MAY SOLICIT APPROVAL FROM ENGINEER/OWNER TO ADJUST FINAL GRADES FROM DESIGN GRADES TO PROVIDE AN OVERALL SITE BALANCE AS A RESULT OF FIELD CONDITIONS.
5. GRADING ACTIVITIES SHALL BE IN A MANNER TO ALLOW POSITIVE DRAINAGE ACROSS DISTURBED SOILS, WHICH MAY INCLUDE EXCAVATION OF TEMPORARY DITCHES TO PREVENT PONDING, AND IF NECESSARY PUMPING TO ALLEVIATE PONDING. CONTRACTOR SHALL PREVENT SURFACE WATER FROM ENTERING INTO EXCAVATIONS. IN NO WAY SHALL OWNER BE RESPONSIBLE FOR REMEDIATION OF UNSUITABLE SOILS CREATED/ORIGINATED AS A RESULT OF IMPROPER SITE GRADING OR SEQUENCING. CONTRACTOR SHALL SEQUENCE GRADING ACTIVITIES TO LIMIT EXPOSURE OF DISTURBED SOILS DUE TO WEATHER.
6. THE CONTRACTOR IS RESPONSIBLE FOR MEETING MINIMUM COMPACTION STANDARDS. THE CONTRACTOR SHALL NOTIFY ENGINEER/OWNER IF PROPER COMPACTION CANNOT BE OBTAINED. THE PROJECT'S GEOTECHNICAL CONSULTANT SHALL DETERMINE WHICH IN-SITU SOILS ARE TO BE CONSIDERED UNSUITABLE SOILS. THE ENGINEER/OWNER AND GEOTECHNICAL TESTING CONSULTANT WILL DETERMINE IF REMEDIAL MEASURES WILL BE NECESSARY.
7. IN THE EVENT THAT ANY MOISTURE-DENSITY TEST(S) FAIL TO MEET SPECIFICATION REQUIREMENTS, THE CONTRACTOR SHALL PERFORM CORRECTIVE WORK AS NECESSARY TO BRING THE MATERIAL INTO COMPLIANCE AND RETEST THE FAILED AREA AT NO COST TO THE OWNER.
8. WITH THE AUTHORIZATION OF THE ENGINEER/OWNER, MATERIAL THAT IS TOO WET TO PERMIT PROPER COMPACTION MAY BE SPREAD ON FILL AREAS IN AN EFFORT TO DRY. CONTRACTOR SHALL CLEARLY FIELD MARK THE EXTERIOR LIMITS OF SPREAD MATERIAL WITH PAINTED LATH AND SUBMIT A PLAN TO THE ENGINEER/OWNER THAT IDENTIFIES THE LIMITS. UNDER NO CONDITION SHALL THE SPREAD MATERIAL DEPTH EXCEED THE MOST RESTRICTIVE OF: THE EFFECTIVE TREATMENT DEPTH OF MACHINERY THAT WILL BE USED TO TURNOVER THE SPREAD MATERIAL; OR THE MAXIMUM COMPACTION LIFT DEPTH.
9. THE CONTRACTOR SHALL IMMEDIATELY NOTIFY ENGINEER/OWNER IF GROUNDWATER IS ENCOUNTERED DURING EXCAVATION.
10. CONTRACTOR IS SOLELY RESPONSIBLE FOR THE DESIGN AND CONSTRUCTION OF ADEQUATE AND SAFE TEMPORARY SHORING, BRACING, RETENTION STRUCTURES, AND EXCAVATIONS.
11. THE SITE SHALL BE COMPLETED TO WITHIN 0.10-FT (+/-) OF THE PROPOSED GRADES AS INDICATED WITHIN THE PLANS PRIOR TO PLACEMENT OF TOPSOIL OR STONE. CONTRACTOR IS ENCOURAGED TO SEQUENCE CONSTRUCTION SUCH THAT THE SITE IS DIVIDED INTO SMALLER AREAS TO ALLOW STABILIZATION OF DISTURBED SOILS IMMEDIATELY UPON COMPLETION OF INDIVIDUAL SMALLER AREAS.
12. CONTRACTOR SHALL CONTACT "DIGGER'S HOTLINE" FOR LOCATIONS OF ALL EXISTING UTILITIES PRIOR TO COMMENCEMENT OF ANY CONSTRUCTION ACTIVITIES AND SHALL BE RESPONSIBLE FOR PROTECTING SAID UTILITIES FROM ANY DAMAGE DURING CONSTRUCTION.
13. CONTRACTOR SHALL PROTECT INLETS AND ADJACENT PROPERTIES WITH SILT FENCING OR APPROVED EROSION CONTROL METHODS UNTIL CONSTRUCTION IS COMPLETED. CONTRACTOR SHALL PLACE SILT FENCING AT DOWN SLOPE SIDE OF GRADING LIMITS.
14. CONTRACTOR SHALL BE RESPONSIBLE FOR DAMAGE TO ANY EXISTING FACILITIES OR UTILITIES. ANY DAMAGE SHALL BE REPAIRED TO THE OWNER'S SATISFACTION AT THE EXPENSE OF THE CONTRACTOR.
15. WORK WITHIN ANY ROADWAY RIGHT-OF-WAY SHALL BE COORDINATED WITH THE APPROPRIATE MUNICIPAL OFFICIAL PRIOR TO COMMENCEMENT OF ANY CONSTRUCTION ACTIVITIES. CONTRACTOR SHALL BE RESPONSIBLE FOR OBTAINING ALL NECESSARY PERMITS AND FEES. GRADING WITHIN RIGHT-OF-WAY IS SUBJECT TO APPROVAL BY SAID OFFICIALS. RESTORATION OF RIGHT-OF-WAY IS CONSIDERED INCIDENTAL AND SHALL BE INCLUDED IN THE COST OF GRADING. RESTORATION SHALL INCLUDE ALL ITEMS NECESSARY TO RESTORE RIGHT-OF-WAY IN-KIND INCLUDING LANDSCAPING.
16. CONTRACTOR SHALL COMPLY WITH ALL VILLAGE OF PLEASANT PRAIRIE CONSTRUCTION STANDARDS/ORDINANCES.
17. LANDSCAPE AND TURF AREAS SHALL HAVE A MINIMUM OF 4-INCH TOPSOIL REPLACEMENT.
18. TOPSOIL BERMING SHALL ACHIEVE 90% STANDARD PROCTOR DENSITY AT 3%(±) OPTIMUM MOISTURE CONTENT.
19. SURVEY BENCHMARKS AND MAPPING HAS BEEN PROVIDED BY CHAPUT LAND SURVEY, INC. IN NO WAY DOES PEG WARRANT THE BASEMAP IS ALL INCLUSIVE OR REPRESENTATIVE OF ACTUAL CONDITIONS. CONTRACTOR SHALL PROVIDE CHECKS AS NECESSARY TO VERIFY THE BASEMAP CONTENT AND ACCURACY.

DRAFTED: DC DESIGNED: AS REVIEWED: MC

LEGEND

⦿	STORM SEWER MANHOLE
●	STORM SEWER CATCH BASIN- ROUND CASTING
■	STORM SEWER CATCH BASIN- RECTANGULAR CASTING
◀	PROPOSED CONCRETE FLARED END SECTION
749	PROPOSED CONTOUR
+ 750.00	SPOT ELEVATION
GRASS / PAVEMENT	DIRECTION OF SURFACE FLOW
	DITCH OR SWALE
	DIVERSION SWALE
	OVERFLOW RELIEF ROUTING
	CONCRETE SIDEWALK
	CURB AND GUTTER
	DEPRESSED CURB
	REVERSE PITCH CURB & GUTTER
EP	EDGE OF PAVEMENT
FF	FINISHED FLOOR
TW	TOP OF WALK
YG	YARD GRADE
HP	HIGH POINT

A[illegible] TR[illegible]CTI[illegible] [illegible]RA[illegible]CH[illegible], [illegible]ALL[illegible] TR[illegible], [illegible]TC[illegible] TH[illegible] CR[illegible] [illegible]ITHI[illegible] TH[illegible] PR[illegible]P[illegible]RT[illegible] [illegible]DAR[illegible] [illegible]HALL [illegible] R[illegible]M[illegible]D[illegible]

EXISTING CONDITIONS SURVEY:

[illegible] CHAP[illegible]T LA[illegible]D [illegible], LLC [illegible] ALTH[illegible] PI[illegible]ACL[illegible] [illegible] ACC[illegible]RAT[illegible] ***CONTRACTOR SHALL UNDERTAKE NECESSARY EFFORTS TO VERIFY THE EXISTING CONDITIONS PRIOR TO THE START OF MATERIAL PROCUREMENT AND CONSTRUCTION EFFORTS/ACTIVITIES***

PLAN I DESIGN I DELIVER
www.pinnacle-engr.com

PINNACLE ENGINEERING GROUP
ENGINEERING I NATURAL RESOURCES I SURVEYING

WISCONSIN OFFICE:
15850 W. BLUEMOUND ROAD
BROOKFIELD, WI 53005
(262) 754-8888
CHICAGO I MILWAUKEE : NATIONWIDE

This Document, Either as Drawing or the Assemblage of Electronic Data, is the Property of Commerce Construction Co., L.P. ("Commerce"). [illegible] without the written consent of Commerce. This document [illegible] without warranty of any kind either expressed or implied. [illegible] and completeness. Commerce is not responsible for [illegible] document. The acceptance or use of this document will [illegible]

[illegible] ID [illegible]T	MAC	
ADDR[illegible] [illegible]ILLA[illegible] C[illegible]MM[illegible]T[illegible]	MAC	
ADDR[illegible] [illegible]ILLA[illegible] C[illegible]MM[illegible]T[illegible]	MAC	
ADDR[illegible] [illegible]ILLA[illegible] C[illegible]MM[illegible]T[illegible]	MAC	
R[illegible]		DAT[illegible]

C[illegible]MM[illegible]RC[illegible] C[illegible]TR[illegible]CTI[illegible] C[illegible],L.P.
Cr[illegible]rad[illegible] Par[illegible]a[illegible]rth
Cit[illegible] Indu[illegible]tr[illegible], Cali[illegible]rnia
Tele[illegible]h[illegible]ne
Licen[illegible]e

[illegible]RADI[illegible] PLA[illegible]
MA[illegible]TIC [illegible]AD[illegible]R L[illegible]I[illegible]TIC[illegible] C[illegible]T[illegible]R
CTH "H" [illegible]ILLA[illegible] PL[illegible]A[illegible]T PRAIRI[illegible], [illegible]I

DRA[illegible] DAT[illegible]
P[illegible],LLC
CCC [illegible]A
[illegible]H[illegible]T [illegible]
C[illegible]

LEGEND

	STORM SEWER MANHOLE		OVERFLOW RELIEF ROUTING
	STORM SEWER CATCH BASIN- ROUND CASTING		CONCRETE SIDEWALK
	STORM SEWER CATCH BASIN- RECTANGULAR CASTING		CURB AND GUTTER
	PROPOSED CONCRETE FLARED END SECTION		DEPRESSED CURB
749	PROPOSED CONTOUR		REVERSE PITCH CURB & GUTTER
+ 750.00	SPOT ELEVATION	EP	EDGE OF PAVEMENT
	DIRECTION OF SURFACE FLOW	FF	FINISHED FLOOR
	DITCH OR SWALE	TW	TOP OF WALK
	DIVERSION SWALE	YG	YARD GRADE
		HP	HIGH POINT

EXISTING CONDITIONS SURVEY:

□□T□□ C□□DIT□□□ □R□□PR□□ID□D □□ CHAP□T LA□D □□R□□□, LLC □□ □□□□M□□R □□, □□□□ A□D P□□AGL□ □□□□□□RI□□ □R□□P □□ □□L□ □□, □□□□ ALTH□□□H P□□ACL□ □□□□I□□□R□□ □R□□P HA□□ □□ R□A□□□ T□ □□L□□□ TH□□□R□□□ □□ACC□RAT□, P□□ MA□□ □□T□ARRA□T□□R □□□□TI□□ I□□□RMATI□□ C□□TA□□□ □□ TH□E TH□□ PLA□□ □□ALL□E□L□□□□R ACC□RAT□□ ***CONTRACTOR SHALL UNDERTAKE NECESSARY EFFORTS TO VERIFY THE EXISTING CONDITIONS PRIOR TO THE START OF MATERIAL PROCUREMENT AND CONSTRUCTION EFFORTS/ACTIVITIES***

NOTES

1. **SEE OVERALL GRADING PLAN SHEET FOR GRADING NOTES.**
2. **SEE CONSTRUCTION DETAILS SECTION FOR ADDITIONAL INFORMATION PERTAINING TO THE GRADING PLAN.**

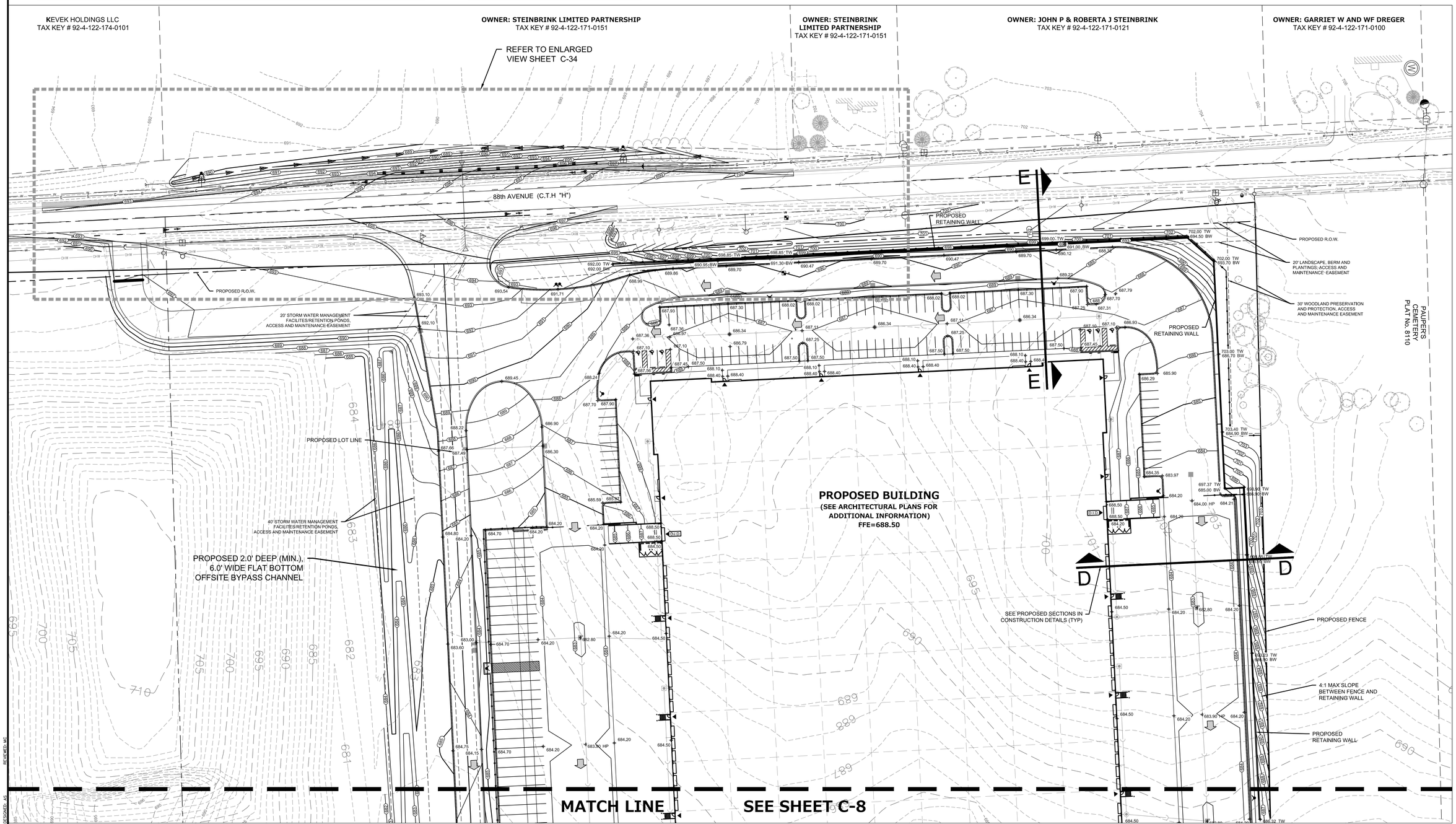

NORTH

GRAPHICAL SCALE (FEET)

0 1" = 40' 80'

This Documents, Ideas or Designs of the Assemblies of Pinnacle Engineering Group Construction Co. L.P. ("Consultant") is the property of the Consultant and is protected by Federal Copyright Laws. It is to be used only for the project specified in a written agreement between the Consultant and its client. Any other use, including reproduction, without the written consent of Consultant. This document is to be returned to Consultant upon request. Reproduction of a rendering, plan or specification, in whole or in part, without written consent of Consultant, violates the copyright laws of the United States and will be subject to civil and criminal prosecution. Pinnacle Engineering Group Construction Co. L.P. ("Consultant") shall not be responsible for any modifications made to this document without the written consent of Consultant.

			DAT□
			R□□□□□
			DAT□
			R□□□□□

	□D □T	MAC	
	ADDR□□ □ILLA□ C□MM□T□	MAC	
	ADDR□□ □ILLA□ C□MM□T□	MAC	
	ADDR□□ □ILLA□ C□MM□T□	MAC	

C□MM□RC□ C□□□TR□CT□□ C□□LP□
□□□□Cr□□□rad□Par□a□□orth
□□Th □□r
Cit□ □Indu□tr□ Cali□mia □□□□□□□□
Tele□h□ne □□□□□□□□□□
Licen□e □□□□□□□□

□RADI□□ PLA□□

□□□I□□□R□□ IMPR□□□M□□T□ PLA□□ □□R
MA□□TIC □AD□□R L□□I□TIC□ C□□T□R
CTH "H" □ILLA□□□ PL□A□A□T PRAIRI□, □ I

Dra□in□ Pl□1□ar
0 1" 2" 4"
□□ th□ □□1□ar □□□□ dra□in□ ha□ □□ □een reduced □ enlarged □□□ □□inal□□th□ □□1□ar □□□□ □□ a□ ar□□□ □□inch □□□□ the □h□□□al □□□□ □□dra□in□ ha□ □han□ed.

DRA□ □ □□ DAT□
P□□,LLC □□□□□□

CCC □□□ □□□
□□□□□□A

□H□□T □□□
C□□

PLAN I DESIGN I DELIVER
www.pinnacle-engr.com

PINNACLE ENGINEERING GROUP
ENGINEERING I NATURAL RESOURCES I SURVEYING

P□□ □□□ □□□□□□□□A

WISCONSIN OFFICE:
15850 W. BLUEMOUND ROAD
BROOKFIELD, WI 53005
(262) 754-8888
CHICAGO I MILWAUKEE : NATIONWIDE

REVIEWED: MC
DESIGNED: AS
DRAFTED: DC

LEGEND

STORM SEWER MANHOLE	
STORM SEWER CATCH BASIN- ROUND CASTING	
STORM SEWER CATCH BASIN- RECTANGULAR CASTING	
PROPOSED CONCRETE FLARED END SECTION	
749	PROPOSED CONTOUR
750.00	SPOT ELEVATION
	DIRECTION OF SURFACE FLOW
	DITCH OR SWALE
	DIVERSION SWALE
	OVERFLOW RELIEF ROUTING
	CONCRETE SIDEWALK
	CURB AND GUTTER
	DEPRESSED CURB
	REVERSE PITCH CURB & GUTTER
EP	EDGE OF PAVEMENT
FF	FINISHED FLOOR
TW	TOP OF WALK
YG	YARD GRADE
HP	HIGH POINT

EXISTING CONDITIONS SURVEY:

□□T□□
A□□ □ □□TR□CTI□□□ □□RA□CH□□, □ALL□□
TR□□□, □TC□□□ TH□ CR□□□ □ ITHI□ TH□
PR□P□RT□ □□□□DAR□ □HALL □□ R□M□□□D□

□□□TI□□ C□□DITI□□□ □□R□□□ PR□□ID□D □□ CHAP□T LA□D □□R□□□, LLC □□ □□□M□□R □□, □□□□ A□D PI□□ACL□ □□□□□□RI□□ □R□□P HA□□□ R□A□□□ T□ □□□□ ALTH□□□H PI□□ACL□ □□□□□□RI□□ □R□□P HA□□□ R□A□□□ T□ □□□□ TH□ □R□□□ I□□ACC□RAT□□ P□□ MA□□□ □□T □ ARRA□T□□R □□□TI□□ I□□RMATI□□ C□□□TA□□D □ ITHI□ TH□□□ PLA□□□ALL□□CL□□□□□R ACC□RAT□□ ***CONTRACTOR SHALL UNDERTAKE NECESSARY EFFORTS TO VERIFY THE EXISTING CONDITIONS PRIOR TO THE START OF MATERIAL PROCUREMENT AND CONSTRUCTION EFFORTS/ACTIVITIES***

NOTES

1. **SEE OVERALL GRADING PLAN SHEET FOR GRADING NOTES.**
2. **SEE CONSTRUCTION DETAILS SECTION FOR ADDITIONAL INFORMATION PERTAINING TO THE GRADING PLAN.**

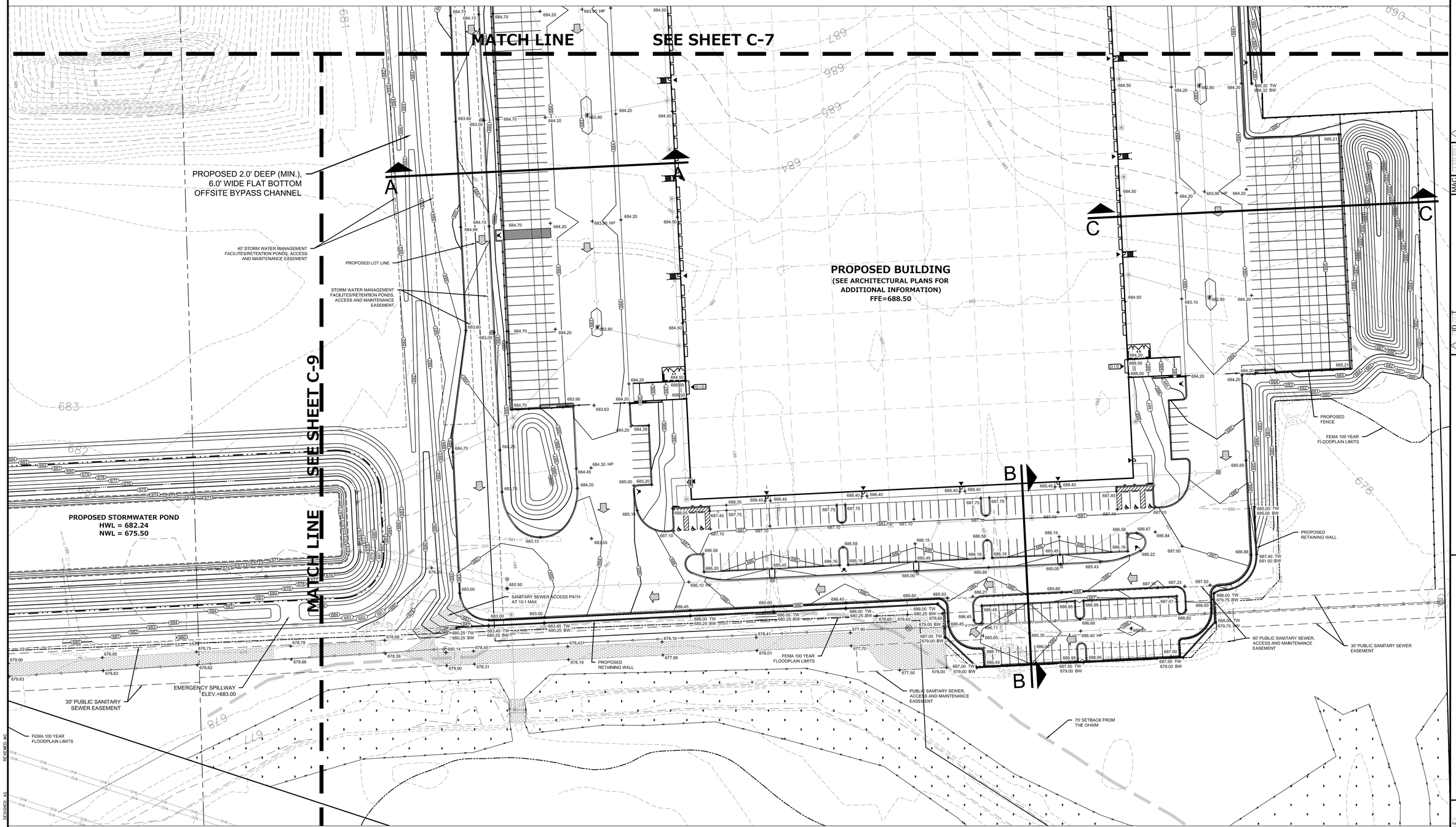

NORTH

GRAPHICAL SCALE (FEET)

0 1" = 40' 80'

PLAN I DESIGN I DELIVER
www.pinnacle-engr.com

PINNACLE ENGINEERING GROUP
ENGINEERING I NATURAL RESOURCES I SURVEYING

WISCONSIN OFFICE:
15850 W. BLUEMOUND ROAD
BROOKFIELD, WI 53005
(262) 754-8888
CHICAGO I MILWAUKEE : NATIONWIDE

P□□ □□□ □□□□□□□A

REVIEWED: MJC
DESIGNED: AJS
DRAFTED: DC

This Documents, Either as Drawing or as Assembling Of Specifications, Is The Property Of Pinnacle Construction Co. L.P. ("Contractor") Pinnacle Construction Co. L.P. ("Contractor") Reserves Its Rights In Accordance With Its Contract Rights, In U.S. Patent Law, Copyright Law, Common Law, Or Other Laws. This Document Is Not To Be Used, Broadcast, Published, Or Circulated Without the written consent of Contractor. This Document Is Not To Be Used For Any Purpose Other Than That Agreed To By Contractor. Ideas, Designs, Arrangements Or Plans As Indicated By Or Represented By This Document Are Property Of Contractor. No Part Of This Document May Be Reproduced Or Copied In Any Form Or By Any Means Graphic, Electronic, Or Mechanical, Including Photocopying, Recording, Taping, Or Information Storage And Retrieval Systems Without Express Written Permission Of Contractor. Title To Physical Objects Shall Pass To Contractor Upon Delivery Of Any Such Objects. Title To Data, Including But Not Limited To Computer Data, Shall Pass To Contractor Upon Delivery Of Such Data. Re-Use Of Any Of The Data Shall Be At Recipient's Sole Risk.

			DAT□
			□□
			R□□□□□
MAC			
MAC			DAT□
MAC			□□
MAC			
			R□□□□□

□D□□T
ADDR□□□ □ILLA□□ C□MM□□T□
ADDR□□□ □ILLA□□ C□MM□□T□
ADDR□□□ □ILLA□□ C□MM□□T□

C□MM□RC□ C□□□TR□CTI□□ C□□LP□
□□□□Cr□□□rad□Par□□a□□orth
□□th □□r
Oil□□Indu□tr□ Call□rnia □□□□□□□□
Tele□h□ne □□□□□□□□□□
Licen□e □□□□□□□□

□RADI□□ PLA□□
□□□□I□□□□RI□□ IMPR□□□□M□□T□□PLA□□ □□R
MA□□□TIC□AD□□R L□□□I□TIC□□ C□□T□□R
CTH "H" □ILLA□□□□PLA□A□T PRAIRI□□, □I

Dra□in□ Pl□□ar

□□e ti□□ □□□ar □□ □□□□ dra□in□ ha□ n□t □een reduced □ enlarged □□□ □riginal□□□□ □□□ □□□ar □□□□ e□□□d□□ □□inch □□□ the □□□□□al □□e □□□□ dra□in□ ha□ chan□ed□□

DRA□ □ □□ DAT□
P□□,LLC □□□□□□

CCC □□□ □□□
□□□□□□□A

□H□□T □□□
C□□

LEGEND

Symbol	Description	Symbol	Description
(manhole symbol)	STORM SEWER MANHOLE	(arrow symbol)	OVERFLOW RELIEF ROUTING
(round symbol)	STORM SEWER CATCH BASIN- ROUND CASTING	(sidewalk symbol)	CONCRETE SIDEWALK
(square symbol)	STORM SEWER CATCH BASIN- RECTANGULAR CASTING	(curb symbol)	CURB AND GUTTER
(triangle symbol)	PROPOSED CONCRETE FLARED END SECTION	(depressed curb symbol)	DEPRESSED CURB
749	PROPOSED CONTOUR	(reverse curb symbol)	REVERSE PITCH CURB & GUTTER
+ 750.00	SPOT ELEVATION	EP	EDGE OF PAVEMENT
GRASS / PAVEMENT	DIRECTION OF SURFACE FLOW	FF	FINISHED FLOOR
(arrows)	DITCH OR SWALE	TW	TOP OF WALK
—>—>—>—	DIVERSION SWALE	YG	YARD GRADE
		HP	HIGH POINT

EXISTING CONDITIONS SURVEY:

[illegible] CHAPUT LAND SURVEYS, LLC [illegible] PINNACLE ENGINEERING GROUP [illegible] ALTHOUGH PINNACLE ENGINEERING GROUP HAS NO REASON TO BELIEVE THE SURVEY IS INACCURATE, PEG MAKES NOT WARRANTY OR GUARANTEE IN ANY INFORMATION CONTAINED WITHIN THESE PLANS IS ALL INCLUSIVE OR ACCURATE. ***CONTRACTOR SHALL UNDERTAKE NECESSARY EFFORTS TO VERIFY THE EXISTING CONDITIONS PRIOR TO THE START OF MATERIAL PROCUREMENT AND CONSTRUCTION EFFORTS/ACTIVITIES***

NOTES

1. SEE OVERALL GRADING PLAN SHEET FOR GRADING NOTES.
2. SEE CONSTRUCTION DETAILS SECTION FOR ADDITIONAL INFORMATION PERTAINING TO THE GRADING PLAN.

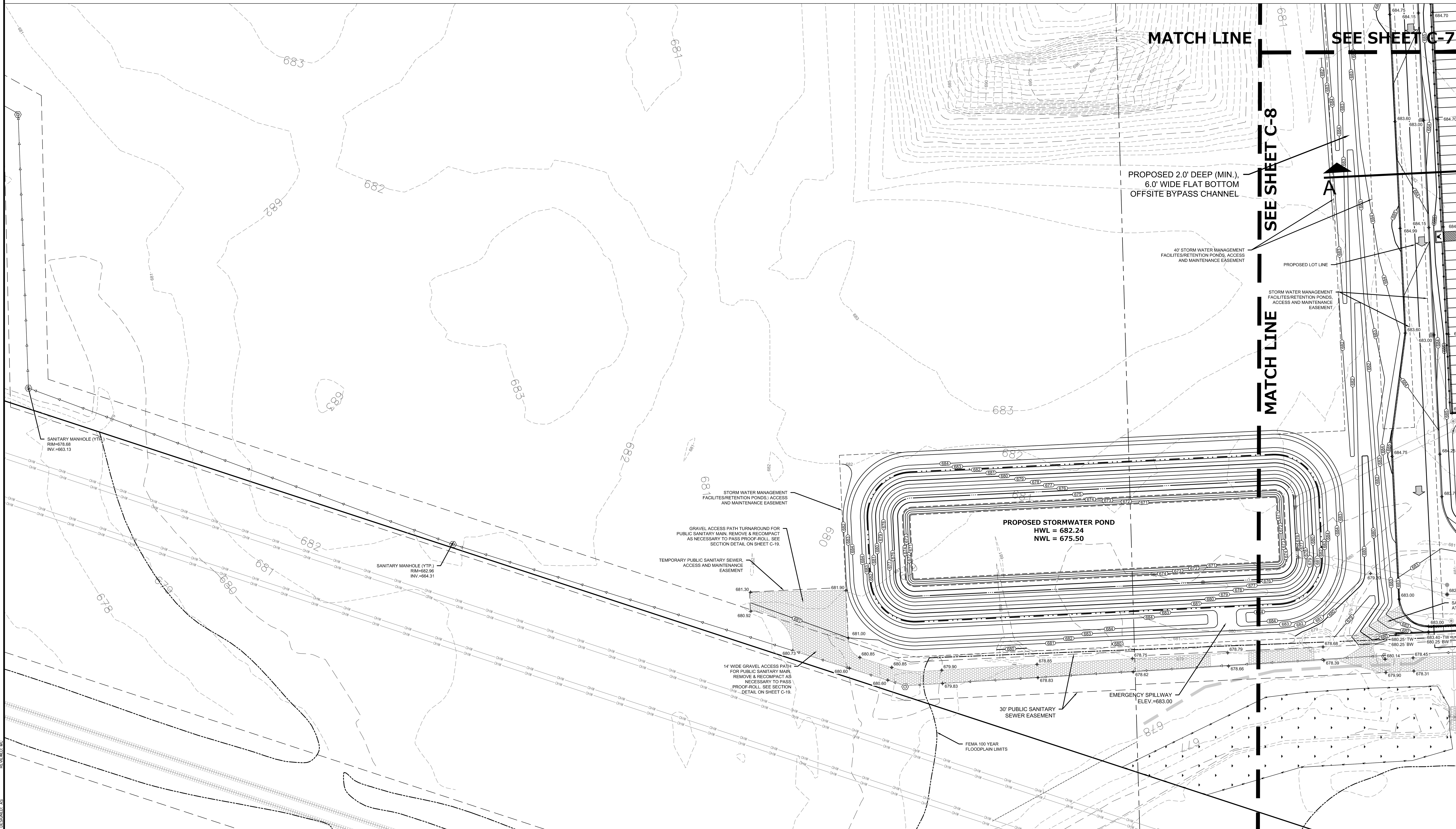

DRAFTED: DC DESIGNED: AS REVIEWED: MC

NORTH

GRAPHICAL SCALE (FEET)

0 1" = 40' 80'

PLAN I DESIGN I DELIVER

www.pinnacle-engr.com

PINNACLE ENGINEERING GROUP

ENGINEERING I NATURAL RESOURCES I SURVEYING

WISCONSIN OFFICE:
15850 W. BLUEMOUND ROAD
BROOKFIELD, WI 53005
(262) 754-8888
CHICAGO I MILWAUKEE : NATIONWIDE

This Document, Either as Drawing or the Assemblage of Electronic Data, is the Property of Commerce Construction Co., L.P. ("Commerce"). [illegible] without the written consent of Commerce. This document [illegible] without warranty of any kind either expressed or implied. [illegible] and completeness. Commerce is not responsible for [illegible] document. The acceptance or use of this document will [illegible]

ID	ISSUE	BY	DATE
	ADDR[illegible] [illegible]ILLA[illegible] C[illegible]MM[illegible]T[illegible]	MAC	[illegible]
	ADDR[illegible] [illegible]ILLA[illegible] C[illegible]MM[illegible]T[illegible]	MAC	[illegible]
	ADDR[illegible] [illegible]ILLA[illegible] C[illegible]MM[illegible]T[illegible]	MAC	[illegible]
		MAC	[illegible]

C[illegible]MM[illegible]RC[illegible] C[illegible]TR[illegible]CTI[illegible] C[illegible], L.P.

GRADING PLAN [illegible]

CTH "H" [illegible]

DRAWN BY: P[illegible], LLC

CCC [illegible] A

SHEET [illegible]

C[illegible]

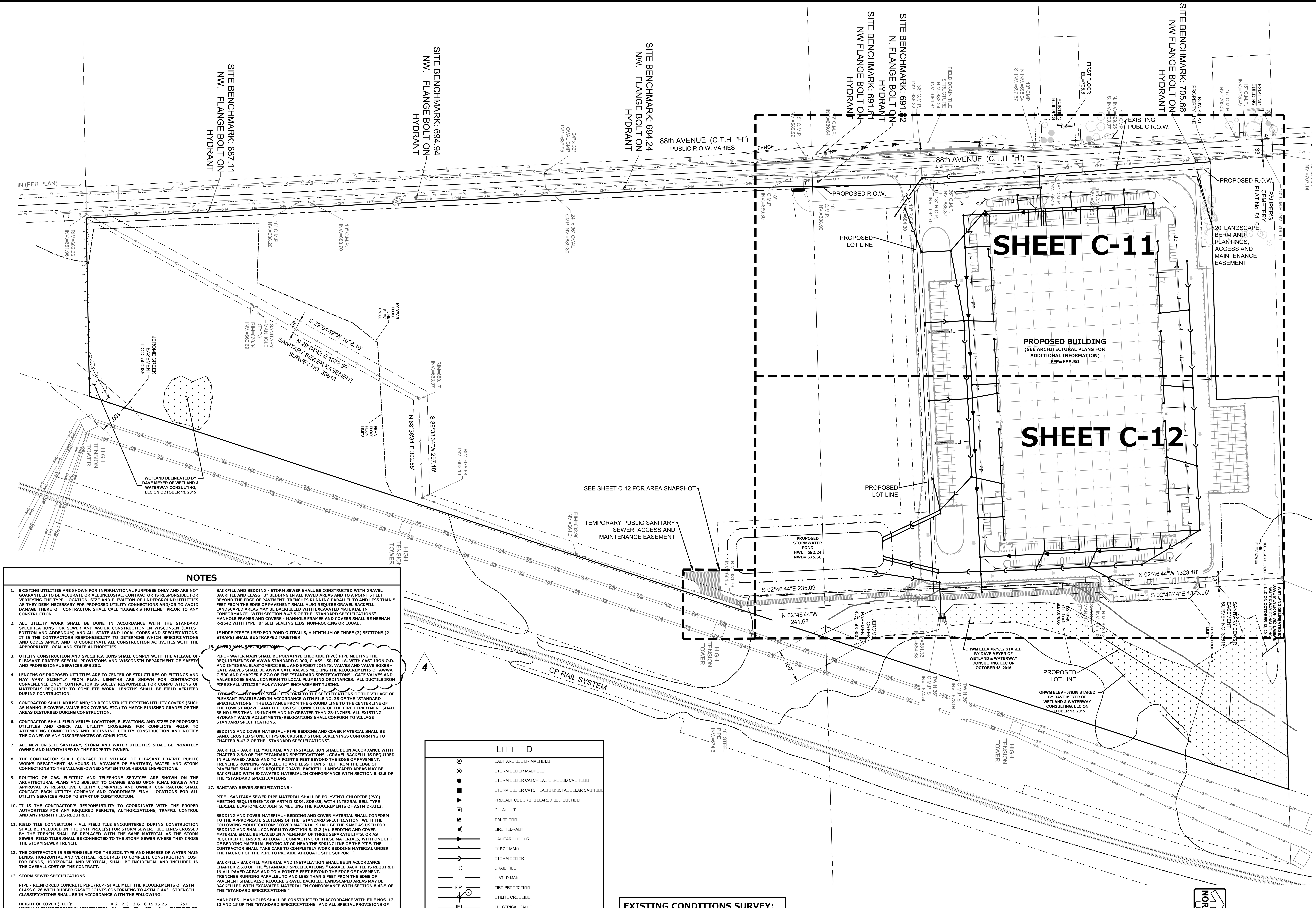

NOTES

1. EXISTING UTILITIES ARE SHOWN FOR INFORMATIONAL PURPOSES ONLY AND ARE NOT GUARANTEED TO BE ACCURATE OR ALL INCLUSIVE. CONTRACTOR IS RESPONSIBLE FOR VERIFYING THE TYPE, LOCATION, SIZE AND ELEVATION OF UNDERGROUND UTILITIES AS THEY DEEM NECESSARY FOR PROPOSED UTILITY CONNECTIONS AND/OR TO AVOID DAMAGE THERETO. CONTRACTOR SHALL CALL "DIGGER'S HOTLINE" PRIOR TO ANY CONSTRUCTION.
2. ALL UTILITY WORK SHALL BE DONE IN ACCORDANCE WITH THE STANDARD SPECIFICATIONS FOR SEWER AND WATER CONSTRUCTION IN WISCONSIN (LATEST EDITION AND ADDENDUM) AND ALL STATE AND LOCAL CODES AND SPECIFICATIONS. IT IS THE CONTRACTORS RESPONSIBILITY TO DETERMINE WHICH SPECIFICATIONS AND CODES APPLY, AND TO COORDINATE ALL CONSTRUCTION ACTIVITIES WITH THE APPROPRIATE LOCAL AND STATE AUTHORITIES.
3. UTILITY CONSTRUCTION AND SPECIFICATIONS SHALL COMPLY WITH THE VILLAGE OF PLEASANT PRAIRIE SPECIAL PROVISIONS AND WISCONSIN DEPARTMENT OF SAFETY AND PROFESSIONAL SERVICES SPS 382.
4. LENGTHS OF PROPOSED UTILITIES ARE TO CENTER OF STRUCTURES OR FITTINGS AND MAY VARY SLIGHTLY FROM PLAN. LENGTHS ARE SHOWN FOR CONTRACTOR CONVENIENCE ONLY. CONTRACTOR IS SOLELY RESPONSIBLE FOR COMPUTATIONS OF MATERIALS REQUIRED TO COMPLETE WORK. LENGTHS SHALL BE FIELD VERIFIED DURING CONSTRUCTION.
5. CONTRACTOR SHALL ADJUST AND/OR RECONSTRUCT EXISTING UTILITY COVERS (SUCH AS MANHOLE COVERS, VALVE BOX COVERS, ETC.) TO MATCH FINISHED GRADES OF THE AREAS DISTURBED DURING CONSTRUCTION.
6. CONTRACTOR SHALL FIELD VERIFY LOCATIONS, ELEVATIONS, AND SIZES OF PROPOSED UTILITIES AND CHECK ALL UTILITY CROSSINGS FOR CONFLICTS PRIOR TO ATTEMPTING CONNECTIONS AND BEGINNING UTILITY CONSTRUCTION AND NOTIFY THE OWNER OF ANY DISCREPANCIES OR CONFLICTS.
7. ALL NEW ON-SITE SANITARY, STORM AND WATER UTILITIES SHALL BE PRIVATELY OWNED AND MAINTAINED BY THE PROPERTY OWNER.
8. THE CONTRACTOR SHALL CONTACT THE VILLAGE OF PLEASANT PRAIRIE PUBLIC WORKS DEPARTMENT 48-HOURS IN ADVANCE OF SANITARY, WATER AND STORM CONNECTIONS TO THE VILLAGE-OWNED SYSTEM TO SCHEDULE INSPECTIONS.
9. ROUTING OF GAS, ELECTRIC AND TELEPHONE SERVICES ARE SHOWN ON THE ARCHITECTURAL PLANS AND SUBJECT TO CHANGE BASED UPON FINAL REVIEW AND APPROVAL BY RESPECTIVE UTILITY COMPANIES AND OWNER. CONTRACTOR SHALL CONTACT EACH UTILITY COMPANY AND COORDINATE FINAL LOCATIONS FOR ALL UTILITY SERVICES PRIOR TO START OF CONSTRUCTION.
10. IT IS THE CONTRACTOR'S RESPONSIBILITY TO COORDINATE WITH THE PROPER AUTHORITIES FOR ANY REQUIRED PERMITS, AUTHORIZATIONS, TRAFFIC CONTROL AND ANY PERMIT FEES REQUIRED.
11. FIELD TILE CONNECTION - ALL FIELD TILE ENCOUNTERED DURING CONSTRUCTION SHALL BE INCLUDED IN THE UNIT PRICE(S) FOR STORM SEWER. TILE LINES CROSSED BY THE TRENCH SHALL BE REPLACED WITH THE SAME MATERIAL AS THE STORM SEWER. FIELD TILES SHALL BE CONNECTED TO THE STORM SEWER WHERE THEY CROSS THE STORM SEWER TRENCH.
12. THE CONTRACTOR IS RESPONSIBLE FOR THE SIZE, TYPE AND NUMBER OF WATER MAIN BENDS, HORIZONTAL AND VERTICAL, REQUIRED TO COMPLETE CONSTRUCTION. COST FOR BENDS, HORIZONTAL AND VERTICAL, SHALL BE INCIDENTAL AND INCLUDED IN THE OVERALL COST OF THE CONTRACT.
13. STORM SEWER SPECIFICATIONS -

PIPE - REINFORCED CONCRETE PIPE (RCP) SHALL MEET THE REQUIREMENTS OF ASTM CLASS C-76 WITH RUBBER GASKET JOINTS CONFORMING TO ASTM C-443. STRENGTH CLASSIFICATIONS SHALL BE IN ACCORDANCE WITH THE FOLLOWING:

HEIGHT OF COVER (FEET):	0-2	2-3	3-6	6-15	15-25	25+
MINIMUM CONCRETE PIPE CLASSIFICATION:	IV	III	II	III	IV	ENGINEER TO SPECIFY

HIGH DENSITY DUAL-WALL POLYETHYLENE N-12 CORRUGATED PIPE (HDPE) SHALL BE AS MANUFACTURED BY ADS OR EQUAL WITH WATER TIGHT JOINTS, AND SHALL MEET THE REQUIREMENTS OF AASHTO DESIGNATION M-294 TYPE "S", OR POLYVINYL CHLORIDE (PVC) - CLASS PS46 MEETING AASHTO M278, AS NOTED. IF HDPE PIPE IS USED FOR POND OUTFALLS, A MINIMUM OF THREE (3) SECTIONS (2 STRAPS) SHALL BE STRAPPED TOGETHER.

INLETS/CATCH BASINS - INLETS/CATCH BASINS SHALL BE CONSTRUCTED IN ACCORDANCE WITH FILE NO. 25 OF THE "STANDARD SPECIFICATIONS" WITH A 1'-8" X 2'-6" MAXIMUM OPENING. FRAME & GRATE SHALL BE NEENAH R-1580 WITH TYPE G GRATE, OR EQUAL. CURB FRAME & GRATE SHALL BE NEENAH R-3067, OR EQUAL. THE SUMP DEPTH (VERTICAL DISTANCE FROM THE BASE OF THE STRUCTURE TO OUTFALL INVERT OF THE PIPE) SHALL BE 18" MIN. STRUCTURE SHOP DRAWINGS SHALL BE SUBMITTED TO PINNACLE ENGINEERING GROUP FOR REVIEW AND APPROVAL PRIOR TO MANUFACTURING AND INSTALLATION.

BACKFILL AND BEDDING - STORM SEWER SHALL BE CONSTRUCTED WITH GRAVEL BACKFILL AND CLASS "B" BEDDING IN ALL PAVED AREAS AND TO A POINT 5 FEET BEYOND THE EDGE OF PAVEMENT. TRENCHES RUNNING PARALLEL TO AND LESS THAN 5 FEET FROM THE EDGE OF PAVEMENT SHALL ALSO REQUIRE GRAVEL BACKFILL. LANDSCAPED AREAS MAY BE BACKFILLED WITH EXCAVATED MATERIAL IN CONFORMANCE WITH SECTION 8.43.5 OF THE "STANDARD SPECIFICATIONS". MANHOLE FRAMES AND COVERS - MANHOLE FRAMES AND COVERS SHALL BE NEENAH R-1642 WITH TYPE "B" SELF SEALING LIDS, NON-ROCKING OR EQUAL .

IF HDPE PIPE IS USED FOR POND OUTFALLS, A MINIMUM OF THREE (3) SECTIONS (2 STRAPS) SHALL BE STRAPPED TOGETHER.

16. WATER MAIN SPECIFICATIONS -

PIPE - WATER MAIN SHALL BE POLYVINYL CHLORIDE (PVC) PIPE MEETING THE REQUIREMENTS OF AWWA STANDARD C-900, CLASS 150, DR-18, WITH CAST IRON O.D. AND INTEGRAL ELASTOMERIC BELL AND SPIGOT JOINTS. VALVES AND VALVE BOXES - GATE VALVES SHALL BE AWWA GATE VALVES MEETING THE REQUIREMENTS OF AWWA C-500 AND CHAPTER 8.27.0 OF THE "STANDARD SPECIFICATIONS". GATE VALVES AND VALVE BOXES SHALL CONFORM TO LOCAL PLUMBING ORDINANCES. ALL DUCTILE IRON PIPE SHALL UTILIZE "POLYWRAP" ENCAASEMENT TUBING.

HYDRANTS - HYDRANTS SHALL CONFORM TO THE SPECIFICATIONS OF THE VILLAGE OF PLEASANT PRAIRIE AND IN ACCORDANCE WITH FILE NO. 38 OF THE "STANDARD SPECIFICATIONS." THE DISTANCE FROM THE GROUND LINE TO THE CENTERLINE OF THE LOWEST NOZZLE AND THE LOWEST CONNECTION OF THE FIRE DEPARTMENT SHALL BE NO LESS THAN 18-INCHES AND NO GREATER THAN 23-INCHES. ALL EXISTING HYDRANT VALVE ADJUSTMENTS/RELOCATIONS SHALL CONFORM TO VILLAGE STANDARD SPECIFICATIONS.

BEDDING AND COVER MATERIAL - PIPE BEDDING AND COVER MATERIAL SHALL BE SAND, CRUSHED STONE CHIPS OR CRUSHED STONE SCREENINGS CONFORMING TO CHAPTER 8.43.2 OF THE "STANDARD SPECIFICATIONS".

BACKFILL - BACKFILL MATERIAL AND INSTALLATION SHALL BE IN ACCORDANCE WITH CHAPTER 2.6.0 OF THE "STANDARD SPECIFICATIONS". GRAVEL BACKFILL IS REQUIRED IN ALL PAVED AREAS AND TO A POINT 5 FEET BEYOND THE EDGE OF PAVEMENT. TRENCHES RUNNING PARALLEL TO AND LESS THAN 5 FEET FROM THE EDGE OF PAVEMENT SHALL ALSO REQUIRE GRAVEL BACKFILL. LANDSCAPED AREAS MAY BE BACKFILLED WITH EXCAVATED MATERIAL IN CONFORMANCE WITH SECTION 8.43.5 OF THE "STANDARD SPECIFICATIONS".

17. SANITARY SEWER SPECIFICATIONS -

PIPE - SANITARY SEWER PIPE MATERIAL SHALL BE POLYVINYL CHLORIDE (PVC) MEETING REQUIREMENTS OF ASTM D 3034, SDR-35, WITH INTEGRAL BELL TYPE FLEXIBLE ELASTOMERIC JOINTS, MEETING THE REQUIREMENTS OF ASTM D-3212.

BEDDING AND COVER MATERIAL - BEDDING AND COVER MATERIAL SHALL CONFORM TO THE APPROPRIATE SECTIONS OF THE "STANDARD SPECIFICATION" WITH THE FOLLOWING MODIFICATION: "COVER MATERIAL SHALL BE THE SAME AS USED FOR BEDDING AND SHALL CONFORM TO SECTION 8.43.2 (A). BEDDING AND COVER MATERIAL SHALL BE PLACED IN A MINIMUM OF THREE SEPARATE LIFTS, OR AS REQUIRED TO INSURE ADEQUATE COMPACTING OF THESE MATERIALS, WITH ONE LIFT OF BEDDING MATERIAL ENDING AT OR NEAR THE SPRINGLINE OF THE PIPE. THE CONTRACTOR SHALL TAKE CARE TO COMPLETELY WORK BEDDING MATERIAL UNDER THE HAUNCH OF THE PIPE TO PROVIDE ADEQUATE SIDE SUPPORT."

BACKFILL - BACKFILL MATERIAL AND INSTALLATION SHALL BE IN ACCORDANCE CHAPTER 2.6.0 OF THE "STANDARD SPECIFICATIONS." GRAVEL BACKFILL IS REQUIRED IN ALL PAVED AREAS AND TO A POINT 5 FEET BEYOND THE EDGE OF PAVEMENT. TRENCHES RUNNING PARALLEL TO AND LESS THAN 5 FEET FROM THE EDGE OF PAVEMENT SHALL ALSO REQUIRE GRAVEL BACKFILL. LANDSCAPED AREAS MAY BE BACKFILLED WITH EXCAVATED MATERIAL IN CONFORMANCE WITH SECTION 8.43.5 OF THE "STANDARD SPECIFICATIONS."

MANHOLES - MANHOLES SHALL BE CONSTRUCTED IN ACCORDANCE WITH FILE NOS. 12, 13 AND 15 OF THE "STANDARD SPECIFICATIONS" AND ALL SPECIAL PROVISIONS OF THE VILLAGE OF PLEASANT PRAIRIE. STRUCTURE SHOP DRAWINGS SHALL BE SUBMITTED TO PINNACLE ENGINEERING GROUP FOR REVIEW AND APPROVAL PRIOR TO MANUFACTURING AND INSTALLATION.

MANHOLE FRAMES AND COVERS - MANHOLE FRAMES AND COVERS SHALL CONFORM TO VILALGE STANDARDS - NEENAH R-1580, NON-ROCKING OR EQUAL.

18. WATER MAIN AND SANITARY SEWER SHALL BE INSULATED WHEREVER THE DEPTH OF COVER IS LESS THAN 6 FEET. INSULATION AND PLACING OF INSULATION SHALL CONFORM TO CHAPTER 4.17.0 "INSULATION" OF THE STANDARD SPECIFICATIONS FOR SEWER AND WATER CONSTRUCTION IN WISCONSIN 6TH EDITION UPDATED WITH ITS LATEST ADDENDUM (TYP.).
19. TRACER WIRE SHALL BE INSTALLED IN ACCORDANCE WITH THE PROVISIONS OF THESE CODE SECTIONS AS PER 182.0715(2R) OF THE STATUTES. THE TRACER WIRE FOR THE SANITARY SEWER LATERAL SHALL BE CONTINUOUS AND SHALL BE EXTENDED ABOVE GRADE VIA A 4-INCH PVC PIPE WITH SCREW-ON CAP ADJACENT TO THE PROPOSED TERMINATION POINT OF THE LATERAL FOR THE PROPOSED BUILDING.
20. SEE UTILITY PLANS AND CONSTRUCTION DETAILS FOR ADDITIONAL INFORMATION.

EXISTING CONDITIONS SURVEY:

CONTRACTOR SHALL UNDERTAKE NECESSARY EFFORTS TO VERIFY THE EXISTING CONDITIONS PRIOR TO THE START OF MATERIAL PROCUREMENT AND CONSTRUCTION EFFORTS/ACTIVITIES

PLAN | DESIGN | DELIVER
www.pinnacle-engr.com

PINNACLE ENGINEERING GROUP
ENGINEERING | NATURAL RESOURCES | SURVEYING

WISCONSIN OFFICE:
15850 W. BLUEMOUND ROAD
BROOKFIELD, WI 53005
(262) 754-8888
CHICAGO | MILWAUKEE : NATIONWIDE

DRAFTED: DC DESIGNED: AS REVIEWED: MC

MAC
MAC
MAC
MAC

CTH "H"

L□□□□D

- □ACITAR□ □□□ □R MA□H□L□
- □T□RM □□□ □R MA□H□L□
- □T□RM □□□ □R CATCH □A□□□ R□□□D CA□TI□□□
- □T□RM □□□ □R CATCH □A□□□ R□CTA□□□LAR CA□TI□□□
- PR□CA□T C□□CR□T□ □LAR□D □□D □□CTI□□
- CL□A□□□□T
- □AL□□ □□□
- □R□H□DRA□T
- □ACITAR□ □□□ □R
- □□RC□ MAI□
- □T□RM □□□ □R
- DRAI□ TIL□
- □ AT□R MAI□
- FP
- □R□ PR□T□CTI□□
- □TILIT□ CR□□□□
- □L□CTRICAL CA□L□
- □A□ MAI□
- T□L□PH□□□ LI□□
- □□RH□AD □IR□□
- LIGHTI□□
- □L□CTRICAL TRA□□□□RM□R □R P□D□□TAL
- P□□ □R P□L□
- P□□ □R P□L□ □ ITH LIGHT□
- □TR□□T □□□
- □TILIT□T□ □□ R□M□□□D

EXISTING CONDITIONS SURVEY:

□□DITI□□ C□□DITI□□□ □□R□□□ PR□□ID□D □□ CHAP□T□ LA□D □□R□□□, LLC □□ □□□□M□□R □□, □□□□A□D PE□□ACL□ □□□□□□R□□□ □R□□P □□ □□L□ □□, □□□□□ ALTH□□□H P□□□ACL□ □□□□□□R□□□ □R□□P HA□□ □□ R□A□□□T□: □□L□□□□ TH□ □□R□□□□□□ACC□RAT□□P□□ MA□□□ □□T□ ARRA□T□□ □R □□□T□□ □□□□RMATI□□ C□□□TA□□D □ ITH□□ TH□□□□ PLA□□ □□ ALL□□CL□□□□□ □R ACC□RAT□□ ***CONTRACTOR SHALL UNDERTAKE NECESSARY EFFORTS TO VERIFY THE EXISTING CONDITIONS PRIOR TO THE START OF MATERIAL PROCUREMENT AND CONSTRUCTION EFFORTS/ACTIVITIES***

NOTES

1. **SEE OVERALL UTILITY PLAN SHEET FOR UTILITY NOTES.**
2. **SEE CONSTRUCTION DETAILS SECTION FOR ADDITIONAL INFORMATION PERTAINING TO THE UTILITY PLAN.**
3. **STORM SEWER TO BE PRIVATELY OWNED AND MAINTAINED.**

CROSSINGS

8" SANITARY OVER 6" FIRE PROTECTION 8" B/PIPE=675.91 6" T/PIPE=674.40	6" SANITARY OVER 6" FIRE PROTECTION 6" B/PIPE=681.18 6" T/PIPE=679.39	8" SANITARY OVER 6" FIRE PROTECTION 8" B/PIPE=681.76 6" T/PIPE=678.56	8" SANITARY OVER 6" FIRE PROTECTION 8" B/PIPE=678.82 6" T/PIPE=677.30	18" STORM OVER 6" FIRE PROTECTION 18" B/PIPE=680.45 6" T/PIPE=678.95	10" STORM OVER 6" SANITARY 10" B/PIPE=682.30 6" T/PIPE=681.16	15" STORM OVER 6" FIRE PROTECTION 15" B/PIPE=678.63 6" T/PIPE=677.10
30" STORM OVER 6" FIRE PROTECTION 30" B/PIPE=677.35 6" T/PIPE=675.85	24" STORM OVER 8" SANITARY 24" B/PIPE=679.21 8" T/PIPE=678.07	6" FIRE PROTECTION OVER 6" FIRE PROTECTION (LEAD) 6" B/PIPE=681.80 6" T/PIPE=681.30	8" SANITARY OVER 6" FIRE PROTECTION 8" B/PIPE=678.86 6" T/PIPE=677.35	18" STORM OVER 6" FIRE PROTECTION 18" B/PIPE=680.50 6" T/PIPE=679.00	10" STORM OVER 6" SANITARY 10" B/PIPE=682.30 6" T/PIPE=681.16	
15" STORM OVER 6" FIRE PROTECTION 15" B/PIPE=678.05 6" T/PIPE=676.55	24" STORM OVER 6" FIRE PROTECTION 24" B/PIPE=679.83 8" T/PIPE=678.30	10" STORM OVER 6" FIRE PROTECTION 10" B/PIPE=681.86 6" T/PIPE=680.35	8" SANITARY OVER 12" WATER 8" B/PIPE=678.90 12" T/PIPE=677.35	18" STORM OVER 12" WATER 18" B/PIPE=680.53 18" B/PIPE=678.05	15" STORM OVER 6" FIRE PROTECTION 15" B/PIPE=681.86 6" T/PIPE=680.35	
15" STORM OVER 8" SANITARY 15" B/PIPE=677.91 8" T/PIPE=676.76	10" STORM OVER 8" SANITARY 10" B/PIPE=683.15 8" T/PIPE=678.80	10" STORM OVER 6" FIRE PROTECTION 10" B/PIPE=682.33 6" T/PIPE=680.80	10" STORM OVER 6" SANITARY 10" B/PIPE=681.74 6" T/PIPE=679.60	10" STORM OVER 6" SANITARY 10" B/PIPE=681.97 6" T/PIPE=680.12	6" SANITARY OVER 6" FIRE PROTECTION 6" B/PIPE=681.58 6" T/PIPE=680.05	
10" STORM OVER 6" FIRE PROTECTION 10" B/PIPE=680.40 6" T/PIPE=678.90	24" STORM OVER 8" SANITARY 24" B/PIPE=679.60 8" T/PIPE=678.72	10" STORM OVER 8" SANITARY 10" B/PIPE=681.63 8" T/PIPE=679.38	6" FIRE PROTECTION OVER 12" WATER 6" B/PIPE=682.50 12" T/PIPE=681.16	10" STORM OVER 6" SANITARY 10" B/PIPE=682.12 6" T/PIPE=680.64	10" STORM OVER 6" FIRE PROTECTION 10" B/PIPE=680.50 6" T/PIPE=679.00	

PUBLIC WORKS COORDINATION

□□ C□□TRACT□R □HALL C□□RDI□ATE A□D □CH□D□L□ I□□P□CTI□□□ □□R □AT□R C□□□□CTI□□□□ ITH TH□□ILLA□□ □□ P□□LIC □□R□□ D□PARTM□□T□C□□□CTI□□ □□R□□HALL □□T C□MM□□C□ □□TIL P□□LIC □□R□□ HA□ □□□□ C□□TACT□D A□D I□□P□CTI□□□ □CH□D□L□D

□□ ALL P□□LIC □AT□R□AL□□□□HALL □□ P□RAT□D □□ □R □□D□R TH□ □□P□R□D□□ □□TH□P□□LIC □□R□□D□PARTM□□T□C□□TRACT□R □HALL C□□RDI□ATE □ ITH TH□P□□LIC □□R□□D□PARTM□□T□

□□ C□□TRACT□R □HALL C□□RDI□ATE□THE□R □□R□A□D□CH□D□L□ I□□P□CTI□□□□R TH□□□□R C□□□CTI□□□T□TH□P□□LIC □A□TIAR□ □□□ □R □ITH TH□□ILLA□□P□□LIC □ □R□□D□PARTM□T□C□□□CTI□□ □□R□□HALL □□T C□MM□□C□ □□TIL P□□LIC □□R□□ HA□ □□□□ C□□TACT□D A□D I□□P□CTI□□□ □CH□D□L□D□

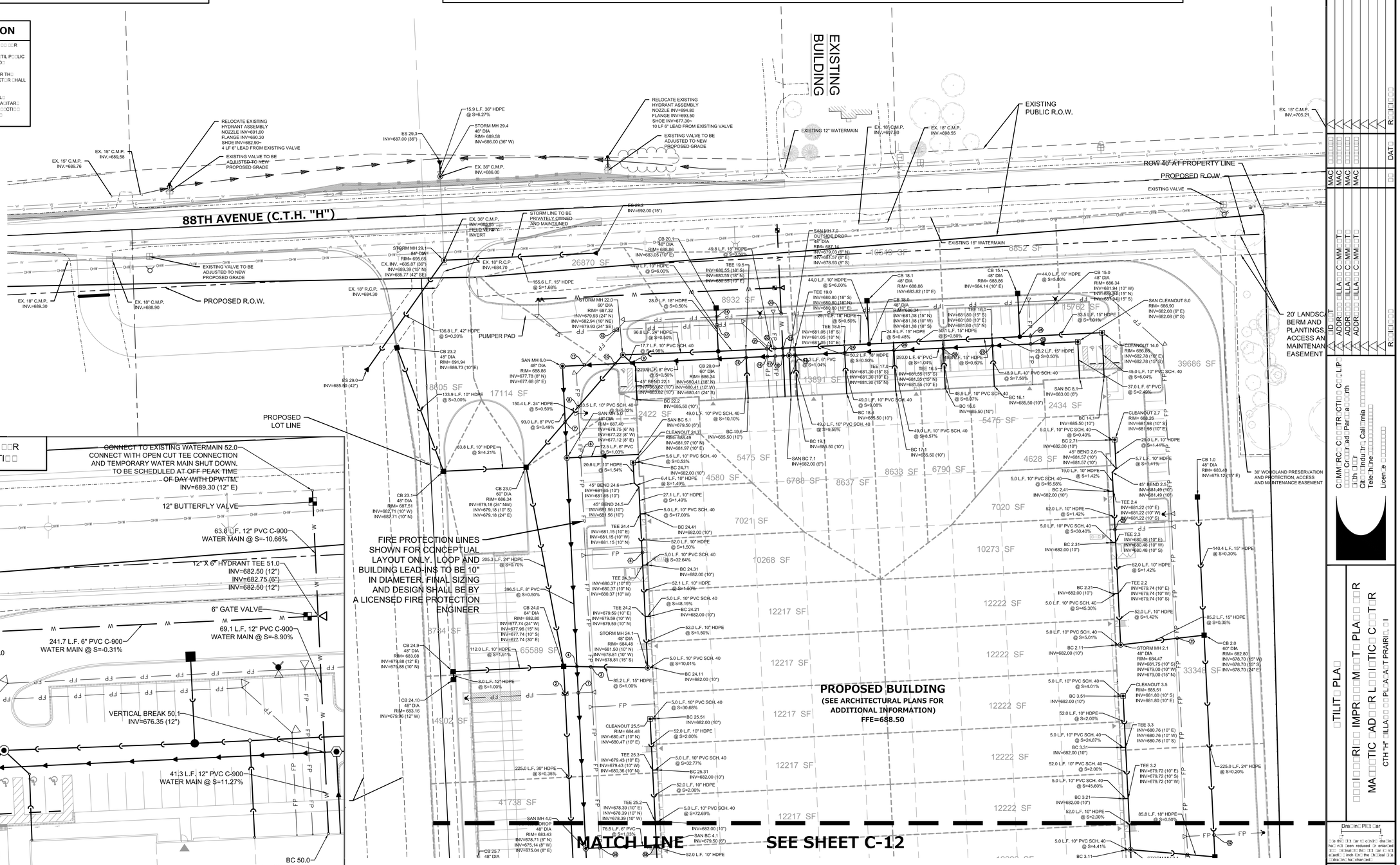

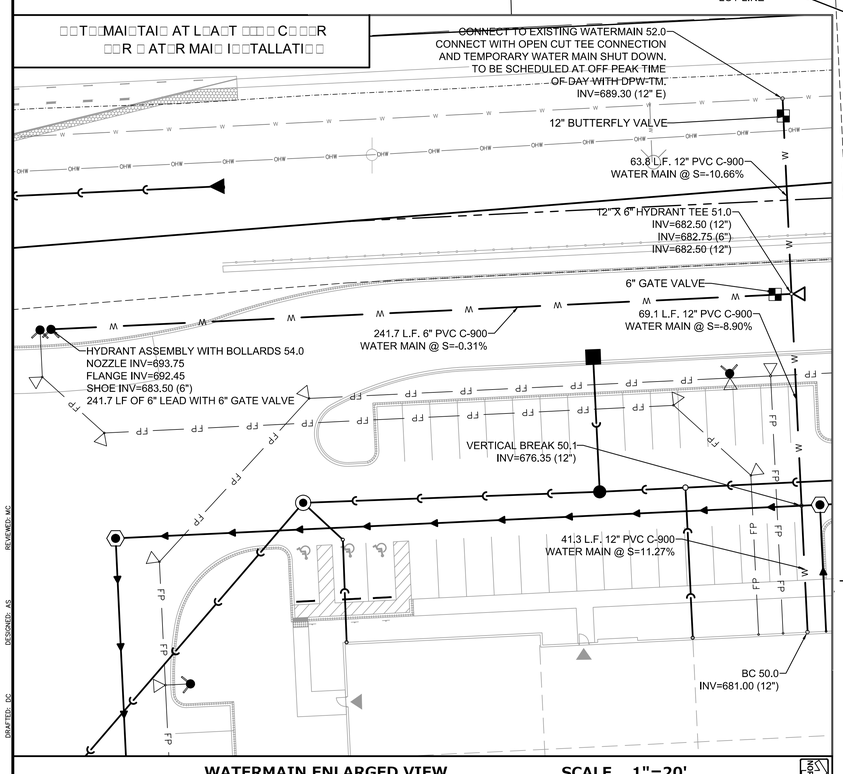

WATERMAIN ENLARGED VIEW SCALE 1"=20'

GRAPHICAL SCALE (FEET)
0 1" = 40' 80'

PINNACLE ENGINEERING GROUP
ENGINEERING | NATURAL RESOURCES | SURVEYING
PLAN | DESIGN | DELIVER
www.pinnacle-engr.com

WISCONSIN OFFICE:
15850 W. BLUEMOUND ROAD
BROOKFIELD, WI 53005
(262) 754-8888
CHICAGO | MILWAUKEE · NATIONWIDE

This Document, Other or Drawing or the Assemblying of Which This Is Part, Is Property of Pinnacle Construction Co. L.P. ("Contractor") and Is Not To Be Used, Loaned, Copied or Disclosed Therein, in Whole or Part, Without the Written Consent of Contractor. This Document, or any Part Thereof, Is Not to Be Used for Any Purpose Other Than Those Agreed to in Writing. Copyright © 2025 Pinnacle Construction Co. L.P. ("Contractor"). All Rights Reserved.

DAT□

R□□□□□

DAT□

MAC MAC MAC

R□□□□□

□ID □□T □ILLA□□ C□MM□□T□
ADDR□□□ □ILLA□□ C□MM□□T□
ADDR□□□ □ILLA□□ C□MM□□T□
ADDR□□□ □ILLA□□ C□MM□□T□

C□MM□RC□ C□□□TR□CTI□□ C□□LP□
□□th □□r
Cit□ □Indu□tr□ Cali□rnia
Tele□h□ne □□□□□□□□□□
Licen□e □□□□□□□□

□TILIT□ PLA□

□□□I□□□R□□ IMPR□□□M□□T PLA□□ □□R
MA□□TIC □AD□□R L□□I□TIC□ C□□T□R
CTH "H" □ILLA□□□ PLA□A□T PRAIRI□, □I

Dra□in□ Pl□□ar
DRA□ □ □ □□ DAT□
P□□,LLC □□□□□
CCC □□ □□ □□□
□□□□□□A
□H□□T □□□
C□□□

REVIEWED: MC
DESIGNED: AS
DRAFTED: DC

L□□□□D

□A□ITAR□ □□□ □R MA□H□L□	□IR□ PR□T□CTI□□
□T□RM □□□ □R MA□H□L□	□TILIT□ CR□□□I□□
□T□RM □□□ □R CATCH □A□I□ (R□□□D CA□TI□□□	□L□CTRICAL CA□L□
□T□RM □□□ □R CATCH □A□I□ (R□CTA□□□LAR CA□TI□□□	□A□ MAI□
PR□CA□T C□□CR□T□ □LAR□D □□D □□CTI□□	T□L□PH□□□ LI□□
CL□A□□□T	□□□RH□AD □ IR□□
□AL□□ □□□	LI□HTI□□
□IR□ H□DRA□T	□L□CTRICAL TRA□□□□RM□R □R P□D□□TAL
□A□ITAR□ □□□ □R	P□□ □R P□L□
□□RC□ MAI□	P□□ □R P□L□ □ ITH LI□HT□
□T□RM □□□ □R	□TR□□T □I□□
DRAI□ TIL□	□TILIT□ T□ □□ R□M□□□D
□ AT□R MAI□	

EXISTING CONDITIONS SURVEY:

□□I□TI□□ C□□DITI□□□ □□R□□□ PR□□ID□D □□ CHAP□T LA□D □□R□□□, LLC □□ □□□□M□□R □□, □□□□ A□D PI□□ACL□ □□□I□□□RI□□ □R□□P □□ □□L□ □□, □□□□□ ALTH□□□H PI□□ACL□ □□□I□□□RI□□ □R□□P HA□ □□ R□A□□□ T□ □□LI□□□ TH□ □□R□□□ I□ I□ACC□RAT□, P□□ MA□□□ □□T □ ARRA□T□ □R □□I□TI□□ I□□□RMATI□□ C□□TAI□□D □ ITHI□ TH□□□ PLA□□ I□ ALL I□CL□□I□□ □R ACC□RAT□. ***CONTRACTOR SHALL UNDERTAKE NECESSARY EFFORTS TO VERIFY THE EXISTING CONDITIONS PRIOR TO THE START OF MATERIAL PROCUREMENT AND CONSTRUCTION EFFORTS/ACTIVITIES***

NOTES

1. SEE OVERALL UTILITY PLAN SHEET FOR UTILITY NOTES.
2. SEE CONSTRUCTION DETAILS SECTION FOR ADDITIONAL INFORMATION PERTAINING TO THE UTILITY PLAN.
3. ADJUSTMENTS TO EXISTING MANHOLES, HYDRANTS, AND VALVES SHALL CONFORM TO STANDARD VILLAGE SPECIFICATIONS

PUBLIC WORKS COORDINATION

□□ C□□TRACT□R □HALL C□□RDI□AT□ A□D □CH□D□L□ I□□P□CTI□□□ □□R □ AT□R C□□□□CTI□□□ □ ITH TH□ □ILLA□□ □□ P□□LIC □ □R□□ D□PARTM□□T□C□□□□CTI□□ □ □R□ □HALL □□T C□MM□□C□ □□TIL P□□LIC □ □R□□ HA□ □□□□ C□□TACT□D A□D I□□P□CTI□□□ □CH□D□L□D□

□□ ALL P□□LIC □ AT□R □AL□□□ □HALL □□ □P□RAT□D □□ □R □□D□R TH□ □□P□R□I□I□□ □□ TH□ P□□LIC □ □R□□ D□PARTM□□T□C□□TRACT□R □HALL C□□RDI□AT□ □ ITH TH□ P□□LIC □ □R□□ D□PARTM□□T□

□□ C□□TRACT□R □HALL C□□RDI□AT□ TH□IR □ □R□ A□D □CH□D□L□ I□□P□CTI□□□ □□R TH□ □□□ □R C□□□□CTI□□ T□ TH□ P□□LIC □A□ITAR□ □□□ □R □ ITH TH□ □ILLA□□ P□□LIC □ □R□□ D□PARTM□□T□C□□□□CTI□□ □ □R□ □HALL □□T C□MM□□C□ □□TIL P□□LIC □ □R□□ HA□ □□□□ C□□TACT□D A□D I□□P□CTI□□□ □CH□D□L□D□

CROSSINGS

24" STORM OVER 6" FIRE PROTECTION 24" B/PIPE=678.04 6" T/PIPE=676.54	42" STORM OVER 6" FIRE PROTECTION 42" B/PIPE=677.00 6" T/PIPE=675.50	6" FIRE PROTECTION OVER 10" STORM 6" B/PIPE=679.37 10" T/PIPE=678.24	48" STORM OVER 8" SANITARY 48" B/PIPE=675.69 8" T/PIPE=673.70	15" STORM OVER 6" FIRE PROTECTION 15" B/PIPE=676.80 6" T/PIPE=675.30	18" STORM OVER 8" SANITARY 18" B/PIPE=676.93 8" T/PIPE=675.50
10" STORM OVER 6" FIRE PROTECTION 10" B/PIPE=678.22 6" T/PIPE=676.72	6" FIRE PROTECTION OVER 6" SANITARY 6" B/PIPE=680.34 6" T/PIPE=678.82	6" FIRE PROTECTION OVER 6" SANITARY 6" B/PIPE=680.13 6" T/PIPE=676.74	6" FIRE PROTECTION OVER 6" SANITARY 6" B/PIPE=678.40 6" T/PIPE=673.63	15" STORM OVER 8" SANITARY 18" B/PIPE=676.38 6" T/PIPE=674.37	6" SANITARY OVER 10" STORM 6" B/PIPE=679.40 10" T/PIPE=678.90
15" STORM OVER 6" FIRE PROTECTION 15" B/PIPE=678.33 6" T/PIPE=676.83	42" STORM OVER 6" FIRE PROTECTION 42" B/PIPE=676.76 6" T/PIPE=675.25	10" STORM OVER 6" SANITARY 10" B/PIPE=679.02 6" T/PIPE=675.39	10" STORM OVER 6" SANITARY 10" B/PIPE=680.46 6" T/PIPE=679.90	6" FIRE PROTECTION OVER 8" SANITARY 6" B/PIPE=677.43 8" T/PIPE=674.88	6" SANITARY OVER 6" FIRE PROTECTION 6" B/PIPE=678.85 6" T/PIPE=677.35
10" STORM OVER 6" FIRE PROTECTION 10" B/PIPE=681.30 6" T/PIPE=678.45	42" STORM OVER 6" FIRE PROTECTION 42" B/PIPE=676.71 6" T/PIPE=675.20	6" FIRE PROTECTION OVER 10" STORM 6" B/PIPE=679.36 10" T/PIPE=678.03	6" SANITARY OVER 6" FIRE PROTECTION 6" B/PIPE=678.21 6" T/PIPE=676.71	36" STORM OVER 6" FIRE PROTECTION 36" B/PIPE=676.19 6" T/PIPE=674.69	
10" STORM OVER 6" FIRE PROTECTION 10" B/PIPE=682.55 6" T/PIPE=679.81	10" STORM OVER 6" SANITARY 10" B/PIPE=678.82 6" T/PIPE=677.06	6" FIRE PROTECTION OVER 6" SANITARY 6" B/PIPE=680.27 6" T/PIPE=674.56	6" FIRE PROTECTION OVER 10" STORM 6" B/PIPE=681.64 10" T/PIPE=680.56	18" STORM OVER 6" FIRE PROTECTION 18" B/PIPE=676.97 6" T/PIPE=675.40	

FIRE PROTECTION LINES SHOWN FOR CONCEPTUAL LAYOUT ONLY. LOOP AND BUILDING LEAD-INS TO BE 10" IN DIAMETER FINAL SIZING AND DESIGN SHALL BE BY A LICENSED FIRE PROTECTION ENGINEER.

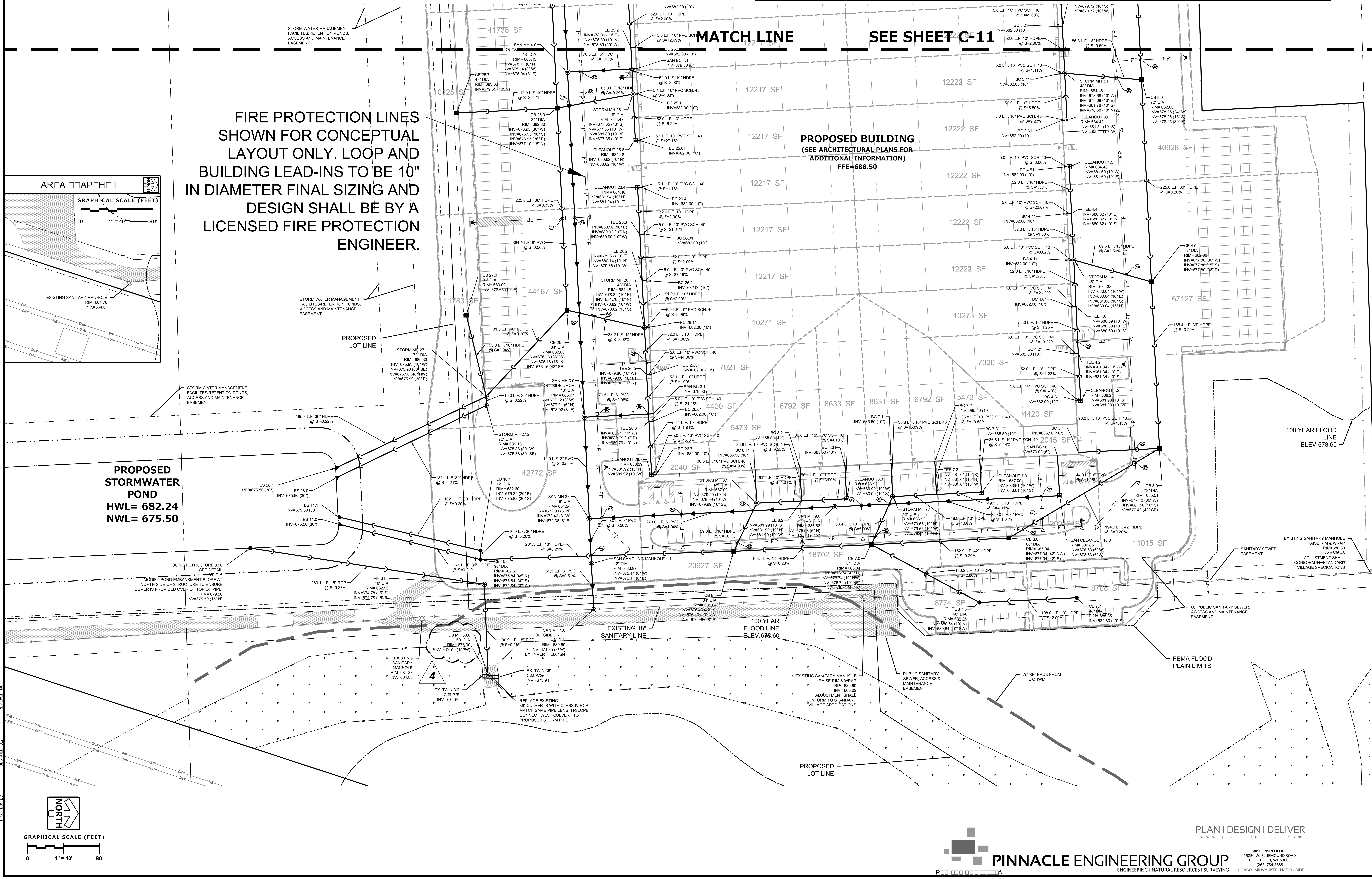

PLAN I DESIGN I DELIVER
www.pinnacle-engr.com

PINNACLE ENGINEERING GROUP
ENGINEERING I NATURAL RESOURCES I SURVEYING

WISCONSIN OFFICE:
15850 W. BLUEMOUND ROAD
BROOKFIELD, WI 53005
(262) 754-8888
CHICAGO I MILWAUKEE : NATIONWIDE

C□MM□RC□ C□□□TR□CTI□□ C□,LP□
□□□□ Cr□□rad□Par□a□□rth
□ith □□r
Cit□□Indu□tr□, Cali□rnia
Tele□h□ne
Licen□e

□TILIT□ PLA□
□□□I□□□RI□□ IMPR□□□M□□T□ PLA□□ □□R
MA□□□TIC □AD□□R L□□I□TIC C□□T□R
CTH "H" □ILLA□□ □□ PLA□A□T PRAIRI□, □I

DRAFTED: DC
DESIGNED: AS
REVIEWED: MC

DRA□ □ □□ P□□,LLC DAT□
CCC □□□ □□□
□□□□□A
□H□□T □□□
C□□□

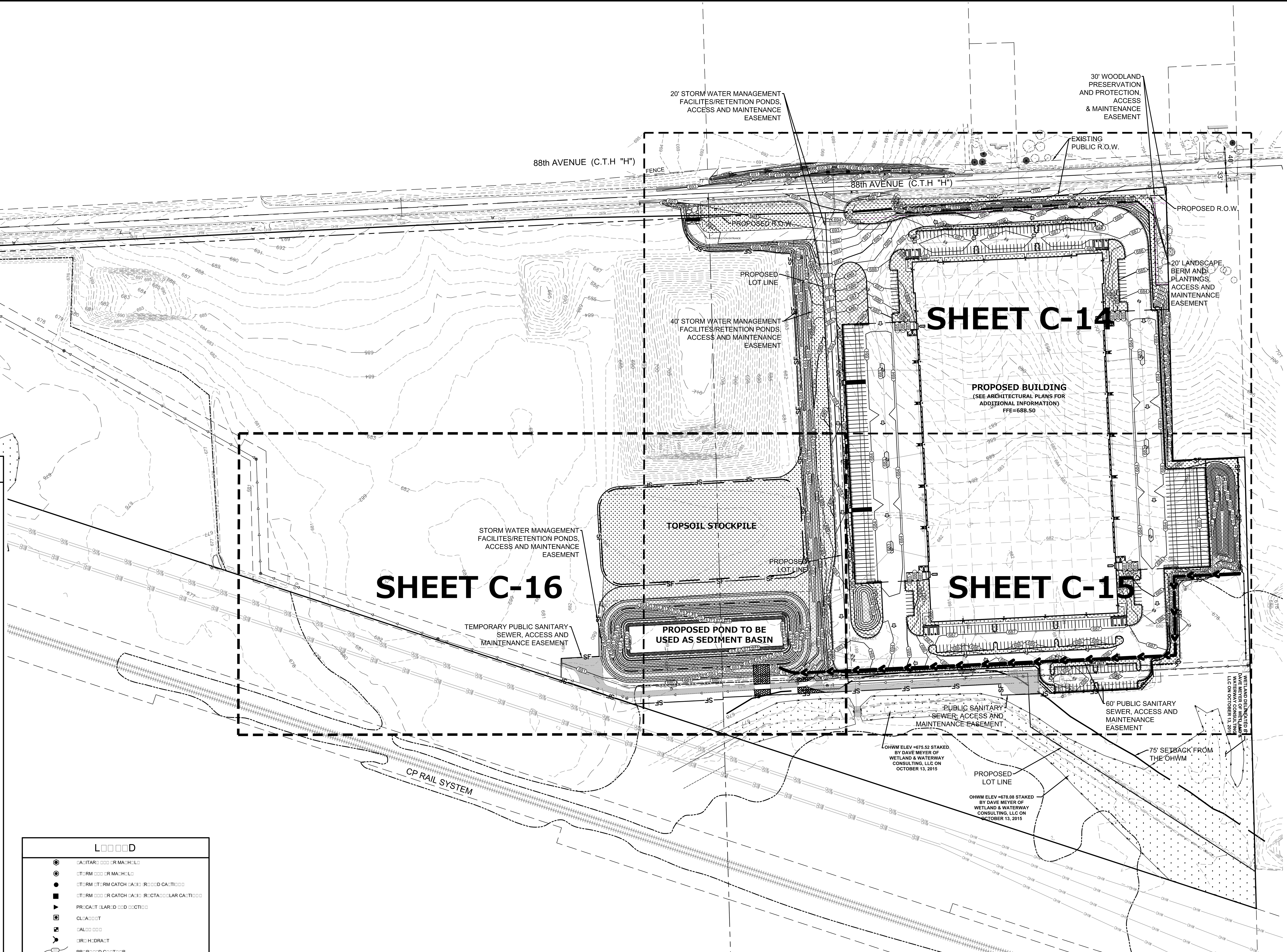

GENERAL EROSION AND SEDIMENT CONTROL NOTES

1. ALL CONSTRUCTION SHALL ADHERE TO THE REQUIREMENTS SET FORTH IN EPA'S NATIONAL POLLUTANT DISCHARGE ELIMINATION SYSTEM (NPDES) STORMWATER GENERAL PERMIT ("WPDES" PERMIT NO. WI-S067831-4) FOR CONSTRUCTION SITE LAND DISTURBANCE ACTIVITIES. ALL EROSION AND SEDIMENT CONTROL MEASURES ARE TO BE CONSTRUCTED AND MAINTAINED IN ACCORDANCE WITH LOCAL, STATE AND FEDERAL TECHNICAL STANDARDS AND PROVISIONS IN EFFECT AT THE TIME OF CONSTRUCTION. THESE PROCEDURES AND STANDARDS SHALL BE REFERRED TO AS BEST MANAGEMENT PRACTICES (BMP'S). IT IS THE RESPONSIBILITY OF ALL CONTRACTORS ASSOCIATED WITH THE PROJECT TO OBTAIN A COPY OF, AND UNDERSTAND, THE BMP'S PRIOR TO THE START OF CONSTRUCTION ACTIVITIES.
2. THE EROSION CONTROL MEASURES INDICATED ON THE PLANS ARE THE MINIMUM REQUIREMENTS. ADDITIONAL CONTROL MEASURES AS DIRECTED BY OWNER/ENGINEER OR GOVERNING AGENCIES SHALL BE INSTALLED WITHIN 24 HOURS OF REQUEST.
3. MODIFICATIONS TO THE APPROVED SWPPP IN ORDER TO MEET UNFORESEEN FIELD CONDITIONS ARE ALLOWED IF MODIFICATIONS CONFORM TO BMP'S. ALL MODIFICATIONS MUST BE APPROVED BY OWNER/ENGINEER/GOVERNING AGENCY PRIOR TO DEVIATION OF THE APPROVED PLAN.
4. INSTALL PERIMETER EROSION CONTROL MEASURES (SUCH AS CONSTRUCTION ENTRANCES, SILT FENCE AND EXISTING INLET PROTECTION) PRIOR TO ANY SITE WORK, INCLUDING GRADING OR DISTURBANCE OF EXISTING SURFACE COVER, AS SHOWN ON PLAN IN ORDER TO PROTECT ADJACENT PROPERTIES/STORM SEWER SYSTEMS FROM SEDIMENT TRANSPORT.
5. CONSTRUCTION ENTRANCES SHALL BE INSTALLED AT ALL LOCATIONS OF VEHICLE INGRESS/EGRESS POINTS. CONTRACTOR IS RESPONSIBLE TO COORDINATE LOCATION(S) WITH THE PROPER AUTHORITIES, PROVIDE NECESSARY FEES AND OBTAIN ALL REQUIRED APPROVALS OR PERMITS. ADDITIONAL CONSTRUCTION ENTRANCES OTHER THAN AS SHOWN ON THE PLANS MUST BE APPROVED BY THE APPLICABLE GOVERNING AGENCIES PRIOR TO INSTALLATION.
6. PAVED SURFACES ADJACENT TO CONSTRUCTION ENTRANCES SHALL BE SWEPT AND/OR SCRAPED TO REMOVE ACCUMULATED SOIL, DIRT AND/OR DUST IMMEDIATELY AND AS REQUESTED BY THE GOVERNING AGENCIES.
7. ALL EXISTING STORM SEWER FACILITIES THAT WILL COLLECT RUNOFF FROM DISTURBED AREAS SHALL BE PROTECTED TO TO PREVENT SEDIMENT DEPOSITION WITHIN STORM SEWER SYSTEMS. INLET PROTECTION SHALL BE IMMEDIATELY FITTED AT THE INLET OF ALL INSTALLED STORM SEWER AND SILT FENCE SHALL BE IMMEDIATELY FITTED AT ALL INSTALLED CULVERT INLETS . ALL INLETS, STRUCTURES, PIPES, AND SWALES SHALL BE KEPT CLEAN AND FREE OF SEDIMENTATION AND DEBRIS.
8. EROSION CONTROL FOR UTILITY CONSTRUCTION (STORM SEWER, WATER MAIN, ETC.) OUTSIDE OF THE PERIMETER CONTROLS SHALL INCORPORATE THE FOLLOWING:

   PLACE EXCAVATED TRENCH MATERIAL ON THE HIGH SIDE OF THE TRENCH.

   BACKFILL, COMPACT AND STABILIZE THE TRENCH IMMEDIATELY AFTER PIPE CONSTRUCTION.

   DISCHARGE TRENCH WATER INTO A SEDIMENTATION BASIN OR FILTERING TANK IN ACCORDANCE WITH BMP'S PRIOR TO RELEASE INTO STORM SEWER OR DITCHES.
9. AT A MINIMUM, SEDIMENT BASINS AND NECESSARY TEMPORARY DRAINAGE PROVISIONS SHALL BE CONSTRUCTED AND OPERATIONAL BEFORE BEGINNING OF SIGNIFICANT MASS GRADING OPERATIONS TO PREVENT OFFSITE DISCHARGE OF UNTREATED RUNOFF.
10. ALL WATERCOURSES AND WETLANDS SHALL BE PROTECTED WITH SILT FENCE TO PREVENT ANY DIRECT DISCHARGE FROM DISTURBED SOILS.
11. ALL TEMPORARY AND PERMANENT EROSION CONTROL MEASURES MUST BE MAINTAINED AND REPAIRED AS NEEDED. THE GENERAL CONTRACTOR WILL BE RESPONSIBLE FOR INSPECTION AND REPAIR DURING CONSTRUCTION. THE OWNER WILL BE RESPONSIBLE IF EROSION CONTROL IS REQUIRED AFTER THE CONTRACTOR HAS COMPLETED THE PROJECT.
12. TOPSOIL STOCKPILES SHALL HAVE A BERM OR TRENCH AROUND THE CIRCUMFERENCE AND PERIMETER SILT FENCE TO CONTROL SILT. IF TOPSOIL STOCKPILE REMAINS UNDISTURBED FOR MORE THAN SEVEN (7) DAYS, TEMPORARY SEEDING AND STABILIZATION IS REQUIRED.
13. EROSION CONTROL MEASURES TEMPORARILY REMOVED FOR UNAVOIDABLE CONSTRUCTION ACTIVITIES SHALL BE IN WORKING ORDER IMMEDIATELY FOLLOWING COMPLETION OF SUCH ACTIVITIES OR PRIOR TO THE COMPLETION OF EACH WORK DAY, WHICH EVER OCCURS FIRST.
14. MAINTAIN SOIL EROSION CONTROL DEVICES THROUGH THE DURATION OF THIS PROJECT. ALL TEMPORARY EROSION AND SEDIMENT CONTROL MEASURES SHALL BE REMOVED WITHIN THIRTY (30) DAYS AFTER FINAL SITE STABILIZATION IS ACHIEVED OR AFTER THE TEMPORARY MEASURES ARE NO LONGER NEEDED. DISTURBANCES ASSOCIATED WITH EROSION CONTROL REMOVAL SHALL BE IMMEDIATELY STABILIZED.
15. PUMPS MAY BE USED AS BYPASS DEVICES. IN NO CASE SHALL PUMPED WATER BE DIVERTED OUTSIDE THE PROJECT LIMITS. PUMP DISCHARGE SHALL BE DIRECTED INTO AN APPROVED FILTER BAG OR APPROVED SETTLING DEVICE.
16. GRADING EFFORTS SHALL BE CONDUCTED IN SUCH A MANNER AS TO MINIMIZE EROSION. EROSION AND SEDIMENT CONTROL MEASURES SHALL CONSIDER THE TIME OF YEAR, SITE CONDITIONS, AND THE USE OF TEMPORARY OR PERMANENT MEASURES. ALL DISTURBED AREAS THAT WILL NOT BE WORKED FOR A PERIOD OF FOURTEEN (14) DAYS REQUIRE TEMPORARY SEEDING FOR EROSION CONTROL. SEEDING FOR EROSION CONTROL SHALL BE IN ACCORDANCE WITH TECHNICAL STANDARDS.
17. ALL DISTURBED SLOPES EXCEEDING 4:1, SHALL BE STABILIZED WITH NORTH AMERICAN GREEN S75BN EROSION MATTING (OR APPROVED EQUAL) AND ALL CHANNELS SHALL BE STABILIZED WITH NORTH AMERICAN GREEN C125BN (OR APPROVED EQUAL) OR APPLICATION OF AN APPROVED POLYMER SOIL STABILIZATION TREATMENT OR A COMBINATION THEREOF, AS REQUIRED. EROSION MATTING AND/OR NETTING USED ONSITE SHALL BE INSTALLED IN ACCORDANCE WITH MANUFACTURER'S GUIDELINES.
18. DURING PERIODS OF EXTENDED DRY WEATHER, THE CONTRACTOR SHALL KEEP A WATER TRUCK ON SITE FOR THE PURPOSE OF WATERING DOWN SOILS WHICH MAY OTHERWISE BECOME AIRBORNE.THE CONTRACTOR IS RESPONSIBLE FOR CONTROLLING WIND EROSION (DUST) DURING CONSTRUCTION AT HIS/HER EXPENSE.
19. DISTURBED AREAS AND AREAS USED FOR STORAGE OF MATERIALS THAT ARE EXPOSED TO PRECIPITATION SHALL BE VISUALLY INSPECTED FOR EVIDENCE OF, OR THE POTENTIAL FOR, POLLUTANTS ENTERING THE DRAINAGE SYSTEM ON A DAILY BASIS.
20. QUALIFIED PERSONNEL (PROVIDED BY THE GENERAL/PRIME CONTRACTOR) SHALL INSPECT DISTURBED AREAS OF THE CONSTRUCTION SITE THAT HAVE NOT BEEN FINALLY STABILIZED AND EROSION AND SEDIMENT CONTROLS WITHIN 24 HOURS OF ALL 0.5-INCH, OR MORE, PRECIPITATION EVENTS WITH A MINIMUM INSPECTION INTERVAL OF ONCE EVERY SEVEN (7) CALENDAR DAYS IN THE ABSENCE OF A QUALIFYING RAIN OR SNOWFALL EVENT. REPORTING SHALL BE IN ACCORDANCE WITH OF THE GENERAL PERMIT. CONTRACTOR SHALL IMMEDIATELY ARRANGE TO HAVE ANY DEFICIENT ITEMS REVEALED DURING INSPECTIONS REPAIRED/REPLACED.
21. SEE ADDITIONAL DETAILS AND NOTES ON SITE STABILIZATION AND CONSTRUCTION DETAILS.

DRAFTED: DC DESIGNED: AS REVIEWED: MC

L□□□□D

⬢	□A□ITAR□ □□□ □R MA□H□L□
◉	□T□RM □□□ □R MA□H□L□
●	□T□RM □T□RM CATCH □A□I□ □R□□□D CA□TI□□□
■	□T□RM □□□ □R CATCH □A□I□ □R□CTA□□□LAR CA□TI□□□
▶	PR□CA□T □LAR□D □□D □□CTI□□
	CL□A□□□T
	□AL□□ □□□
	□IR□ H□DRA□T
	PR□P□□□D C□□T□□R
750.0	PR□P□□□D □P□T □L□□ATI□□
	□ □TLA□D□
	□L□□DPLAI□
	HI□H □ AT□R L□□□L □H□ L□
	□□RMAL □ AT□R L□□□L □□□ L□
GRASS / PAVEMENT	DIR□CTI□□ □□ □□R□AC□ □L□□
	DITCH □R □□ AL□
	DI□□R□I□□ □□ AL□
	□□□R□L□□ R□LI□□ R□□TI□□
SF	□ILT □□□C□
	I□L□T PR□T□CTI□□
	C□□□TR□CTI□□ □□TRA□C□
	H□DR□□□□D □P□R MA□□□ACT□R□R □P□CI□ICATI□□□□
	□R□□I□□ C□□TR□L □LA□□□T □□ORTH AM□RICA□ □R□□□ □□□□R □□□AL□
	T□R□ R□I□□□RC□M□□T MAT

□□T□□
TH□ C□□□TR□CTI□□ □IT□ □HALL □□ □□RR□□□D□D □ ITH A □I□ □□□□□T HI□H C□CL□□□, CHAI□ LI□□ □□□C□□

□□T□□
A□□ □□□TR□CTI□□□ □RA□CH□□, □ALL□□ TR□□□, □TC□□I□ TH□ CR□□□ □ ITHI□ TH□ PR□P□RT□ □□□□DAR□ □HALL □□ R□M□□□D□

CONSTRUCTION SITE SEQUENCING

□□ I□□TALL P□RIM□T□R □ILT □□□C□, I□L□T PR□T□CTI□□ A□D T□MP□RAR□ C□□□TR□CTI□□ □□TRA□C□□

□□ □TRIP A□D □T□C□PIL□ T□P□□IL, I□□TALL □ILT □□□C□ AR□□□D P□RIM□T□R □□ □T□C□PIL□□

□□ C□□D□CT R□□□H □RADI□□ □□□□RT□ A□D I□□TALL CH□C□ DAM□ A□D □□DIM□□T TRAP□□A□I□□ A□ □□□D□D□

□□ I□□TALL □TILIT□ PIPI□□ A□D □TR□CT□R□□, IMM□DIAT□L□ I□□TALL I□L□T PR□T□CTI□□□

□□ C□MPL□T□ □I□AL □RADI□□, I□□TALLATI□□ □□ □RA□□L □A□□ C□□R□□□, PLAC□M□□T □□ C□R□□, PA□□M□□T□, □ AL□□, □TC□

□□ PLAC□ T□P□□IL A□D IMM□DIAT□L□ □TA□ILI□□ DI□T□R□□D AR□A□ □ ITH □R□□I□□ C□□TR□L□□

□□ □R□□I□□ C□□TR□L M□A□□R□□ □HALL □□ R□M□□□D □□L□ A□T□R □IT□ C□□□TR□CTI□□ I□ C□MPL□T□ □ ITH ALL □□IL □□R□AC□□ HA□I□□ A□ □□TA□LI□H□D □□□□TATI□□ C□□□R□

C□□TRACT□R MA□ M□DI□□ □□□□□□CI□□ A□T□R IT□M □ A□ □□□D□D T□ C□MPL□T□ C□□□TR□CTI□□ I□ □R□□I□□ C□□TR□L□ AR□ MAI□TAI□□D I□ ACC□RDA□C□ □ITH TH□ C□□□TR□CTI□□ □IT□ □R□□I□□ C□□TR□L R□□□IR□M□□T□□

EXISTING CONDITIONS SURVEY:

□□I□TI□□ C□□DITI□□□ □□R□□□ PR□□ID□D □□ CHAP□T LA□D □□R□□□, LLC □□ □□□□M□□R □□, □□□□ A□D PI□□ACL□ □□□I□□□RI□□ □R□□P □□ □□L□ □□, □□□□□ ALTH□□□H PI□□ACL□ □□□I□□□RI□□ □R□□P HA□ □□ R□A□□□ T□ □□LI□□□ TH□ □□R□□□ I□ I□ACC□RAT□, P□□ MA□□□ □□T □ ARRA□T□ □R □□I□TI□□ I□□□RMATI□□ C□□TAI□□D □ ITHI□ TH□□□ PLA□□ I□ ALL I□CL□□I□□ □R ACC□RAT□□ *CONTRACTOR SHALL UNDERTAKE NECESSARY EFFORTS TO VERIFY THE EXISTING CONDITIONS PRIOR TO THE START OF MATERIAL PROCUREMENT AND CONSTRUCTION EFFORTS/ACTIVITIES*

PLAN I DESIGN I DELIVER
www.pinnacle-engr.com

PINNACLE ENGINEERING GROUP
ENGINEERING I NATURAL RESOURCES I SURVEYING

WISCONSIN OFFICE:
15850 W. BLUEMOUND ROAD
BROOKFIELD, WI 53005
(262) 754-8888
CHICAGO I MILWAUKEE : NATIONWIDE

P□□ □□□ □□□□□□□□A

This Document, Either as Drawing or the Assemblage of Electronic Data, is the Property of Commerce Construction Co., L.P. ("Commerce"). Thi□ d□cu□ent, includin□ all electr□nic data attached therein, □a□ n□t □e re□r□duced, di□tri□uted, □□di□ied, u□ed □r i□□le□ented in an□ □a□ in □h□le □r in □art, without the written consent of Commerce. This document □hall n□t □e ta□en a□ a □urtenant t□, a□□□ciated □ith, □r a□a re□lace□ent □r the □□□ciall□ □ealed d□cu□ent, and i□ without warranty of any kind either expressed or implied. An□ □er□□n □r □r□ani□ati□n □a□in□ u□e □□□ rel□in□ u□□n thi□ d□cu□ent i□ re□□□n□i□le □□r c□n□ir□in□ it□ accurac□ and completeness. Commerce is not responsible for edited □r re□r□duced □er□i□n□ □□ di□ital data □r□□ thi□ document. The acceptance or use of this document will □e c□n□trued a□ an acce□tance □□ the □□re□□in□.

R□□I□I□□□	□□	DAT□	
△ □ID □□T	MAC	□□□□□□□□	
△ ADDR□□□ □ILLA□ C□MM□□T□	MAC	□□□□□□□□	
△ ADDR□□□ □ILLA□ C□MM□□T□	MAC	□□□□□□□□	
△ ADDR□□□ □ILLA□ C□MM□□T□	MAC	□□□□□□□□	
R□□I□I□□□	□□	DAT□	

C□MM□RC□ C□□□TR□CTI□□ C□, L.P□
□□□□□ Cr□□□rad Par□ a□□ rth
□ith □□□r
Cit□ □□Indu□tr□, Cali□□rnia □□□□□□□□□□
Tele□h□ne □□□□□□□□□□□□□
Licen□e □□□□□□□□□

□IT□ □TA□ILI□ATI□□ PLA□
□□□□I□□□RI□□ IMPR□□□M□□T□ PLA□□ □□R
MA□□□TIC □AD□□R L□□I□TIC□ C□□T□R
CTH "H" □ILLA□□ □□ PL□A□A□T PRAIRI□, □I

Dra□in□ Pl□t □ar
□"
□□e thi□ □l□t □ar t□ c□n□ir□ dra□in□ ha□ n□t □een reduced □r enlar□ed □r□□ □ri□inal I□ thi□ □l□t □ar i□ n□t e□actl□ □ inch l□n□ the □h□□ical □i□e □□ dra□in□ ha□ chan□ed□

DRA□ □ □□ P□□, LLC
DAT□ □□□□□□□□

CCC □□□ □□□□
□□□□□□A

□H□□T □□□
C□□□

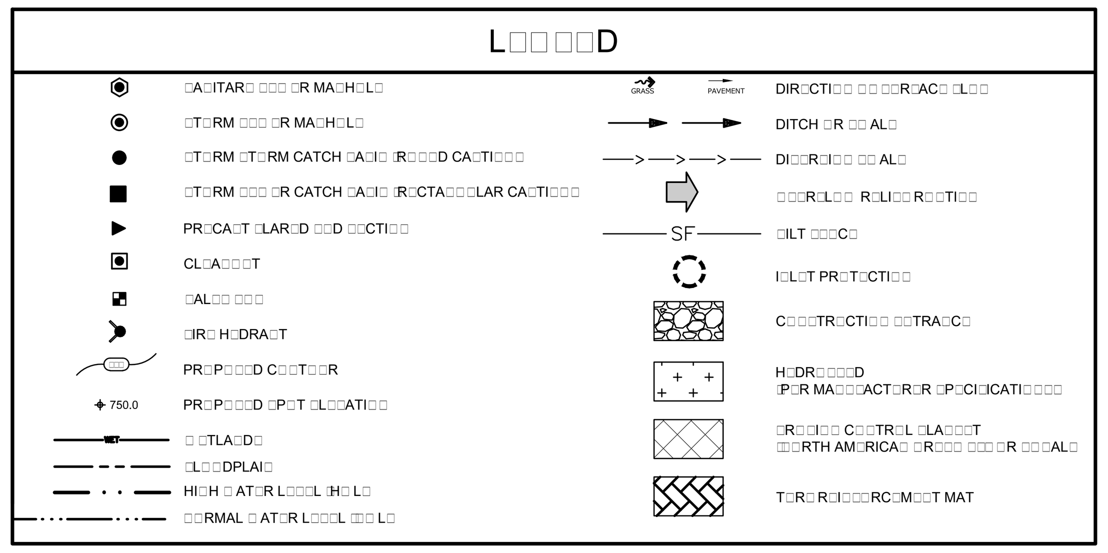

EXISTING CONDITIONS SURVEY:

[illegible] ***CONTRACTOR SHALL UNDERTAKE NECESSARY EFFORTS TO VERIFY THE EXISTING CONDITIONS PRIOR TO THE START OF MATERIAL PROCUREMENT AND CONSTRUCTION EFFORTS/ACTIVITIES***

NOTES

1. SEE FIRST STABILIZATION PLAN SHEET FOR GENERAL EROSION AND SEDIMENT CONTROL NOTES.
2. SEE CONSTRUCTION DETAILS SECTION FOR ADDITIONAL INFORMATION PERTAINING TO THE SITE STABILIZATION PLAN.

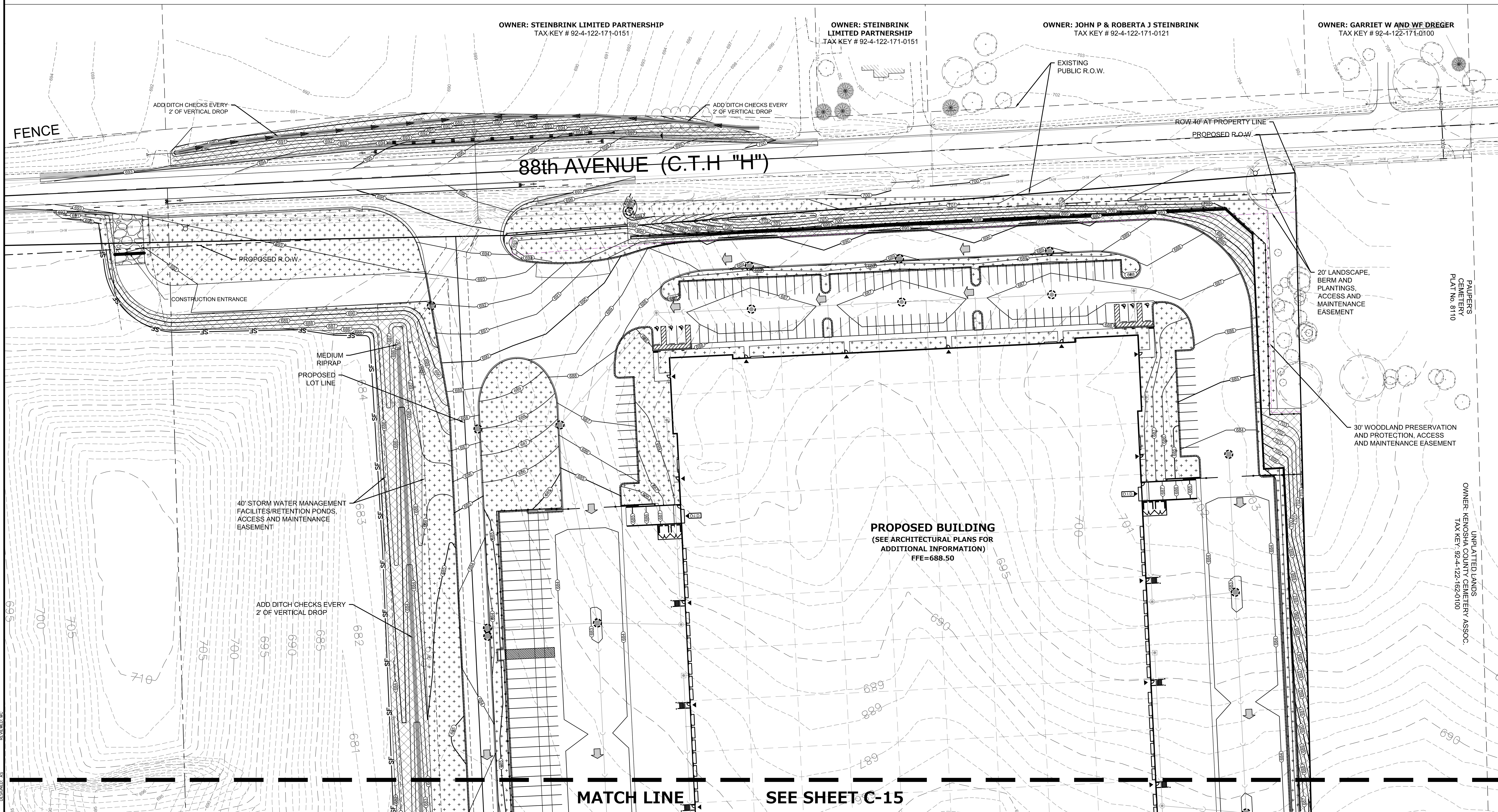

REVIEWED: MC
DESIGNED: AS
DRAFTED: DC

NORTH

GRAPHICAL SCALE (FEET)
0 1" = 40' 80'

PLAN I DESIGN I DELIVER
www.pinnacle-engr.com
PINNACLE ENGINEERING GROUP
ENGINEERING I NATURAL RESOURCES I SURVEYING

WISCONSIN OFFICE:
15850 W. BLUEMOUND ROAD
BROOKFIELD, WI 53005
(262) 754-8888
CHICAGO I MILWAUKEE : NATIONWIDE

This Document, Either as Drawing or the Assemblage of Electronic Data, is the Property of Commerce Construction Co., L.P. ("Commerce")

MAC		
MAC		
MAC		
MAC		

CTH "H"

DAT

CCC

A

C

L□□□□D

□A□ITAR□ □□□□R MA□H□L□	DIR□CTI□□ □□□R□AC□□L□□
□T□RM □□□□R MA□H□L□	DITCH □R □□AL□
□T□RM □T□RM CATCH □A□□□R□□□D CA□TI□□□	DI□□R□□□ □□AL□
□T□RM □□□□R CATCH □A□□□R□CTA□□□LAR CA□TI□□□	□□□R□L□□ R□LL□□R□□T□□
PR□□CAUT□LAR□D □□□CTI□□	□ILT □□□C□
CL□A□□□T	□□L□T PR□□T□CTI□□
□AL□□ □□□	C□□□TR□CTI□□ □□TRA□C□
□R□□H□DRA□T	H□DR□□□□D □P□R MA□□□ACT□R□R □P□CI□ICATI□□□□
PR□□P□□□D C□□T□□R	□R□□□□ C□□TR□L □LA□□□T □□□RTH AM□RICA□ □R□□□ □□□ □R □□□AL□
PR□□P□□□D □P□T □L□□ATI□□	T□R□ R□□□□RC□M□□T MAT
□ □TLA□□□	
□L□□□DPLA□□	
HI□H □AT□R L□□□L□H□L□	
□□RMAL □AT□R L□□□L □□□L□	

EXISTING CONDITIONS SURVEY:

□□□T□□□ C□□DITI□□ □□R□□□□PR□□□D□D □□ CHAP□T□LA□D □□R□□□, LLC □□ □□□□M□□R □□, □□□□A□D PR□□ACL□ □□□□□□□R□□□ □R□□P □□ □□L□ □□, □□□□□ ALTH□□□H PI□□ACL□ □□□□□□□R□□□ □R□□P HA□ □□ R□A□□□ T□ □□L□□□□ TH□ □□R□□□□ □□□ACC□RAT□□P□□ MA□□□□□T□ □ ARRA□T□□ □R □□□T□□ □□□□RMATI□□ C□□TAI□□□D □THI□ TH□□□□PLA□□□T ALL□T□CL□□□□□□R ACC□RAT□□ ***CONTRACTOR SHALL UNDERTAKE NECESSARY EFFORTS TO VERIFY THE EXISTING CONDITIONS PRIOR TO THE START OF MATERIAL PROCUREMENT AND CONSTRUCTION EFFORTS/ACTIVITIES***

NOTES

1. SEE FIRST STABILIZATION PLAN SHEET FOR GENERAL EROSION AND SEDIMENT CONTROL NOTES.
2. SEE CONSTRUCTION DETAILS SECTION FOR ADDITIONAL INFORMATION PERTAINING TO THE SITE STABILIZATION PLAN.

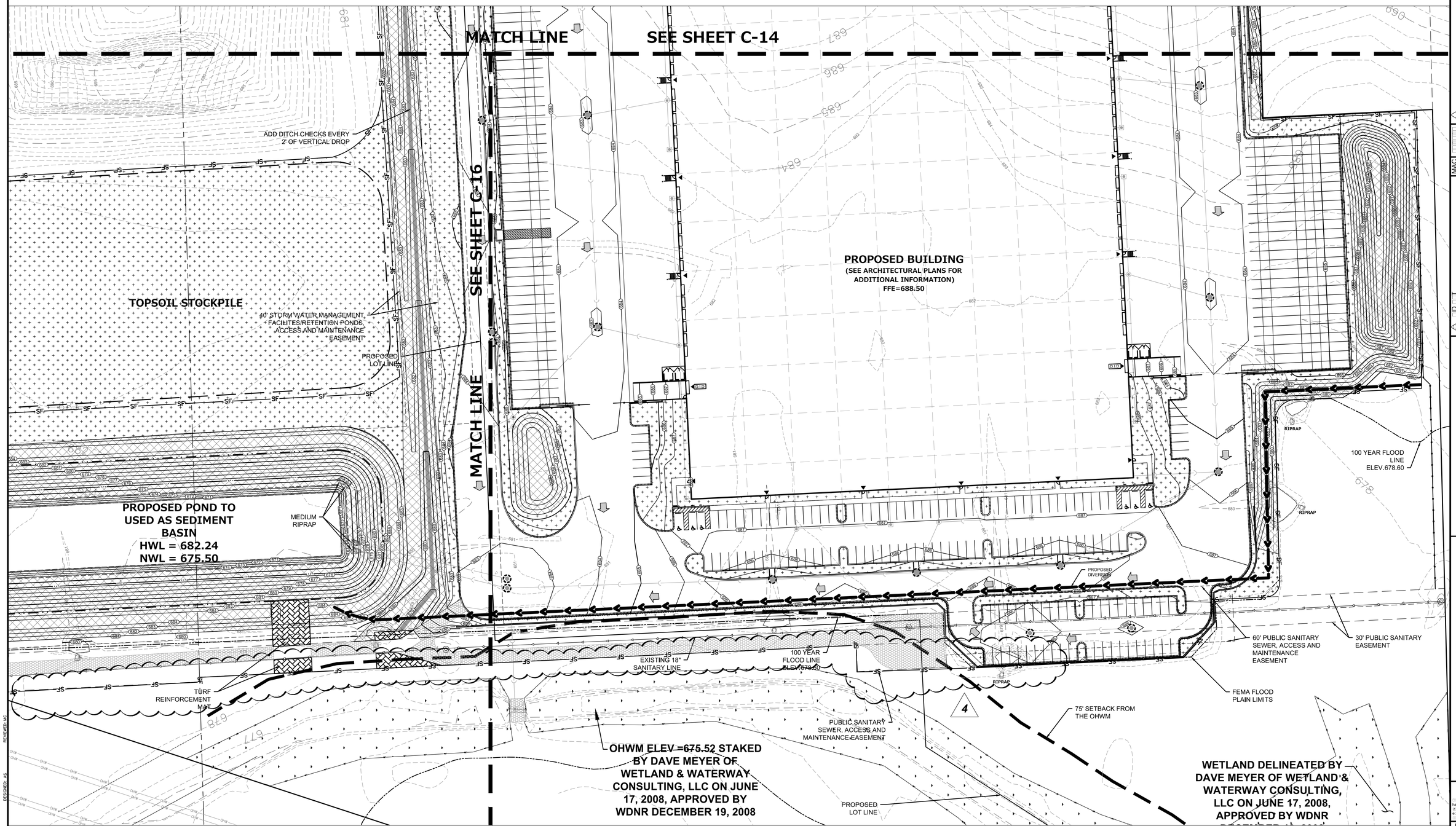

This Documents, Ideas or Drawing or the Assemblage of Ideas or Drawings Prepared by Pinnacle Construction Co. L.P. ("Consultant") is the property of Consultant and is protected by copyright. Therefore, in no event shall Consultant be deemed to be a party to a joint venture or partnership with the Client or any other party without the written consent of Consultant. This document is to be used only for the purpose and in the project specified in a written agreement between Consultant and Client. Any other use or reuse by Client or others on this or any other project, or any alteration of this document, is prohibited without the express written consent of Consultant. Reproduction of this document, in whole or in part, is prohibited. Title to, and ownership of, all copies of this document remain with Consultant. Client is permitted to retain one copy of this document for its own use in connection with the project described in this document. Client may not rely on any copy of this document that does not contain the original seal and signature of an authorized representative of Consultant.

			DAT□
			R□□□□□□
			DAT□
			R□□□□□□

	MAC		
	MAC		
	MAC		
	MAC		

	□ID □□T	
	ADDR□□□ □ILLA□□ C□MM□□T□	
	ADDR□□□ □ILLA□□ C□MM□□T□	
	ADDR□□□ □ILLA□□ C□MM□□T□	
	R□□□□□□	

C□MM□RC□ C□□□TR□CTI□□ C□□LP□
□□□□ Or□□□rad□ Par□□a□□th
□□th □□□r
Cit□ □ndu□tr□ Cali□rnia
Tele□h□ne □□□□□□□□□□
Licen□e □□□□□□□□

□IT□ □TA□ILI□ATI□□ PLA□
□□□I□□□□RI□□ IMPR□□□M□□T□ PLA□□ □□□R
MA□□□TIC□AD□□R L□□□I□TIC□ C□□T□□R
CTH "H" □ILLA□□□□PL□A□T PRAIRI□, □ I

Dra□in□ Pl□□ □ar
□ □
□□e th□ □□□ □ar □□ □□ □□□□ dra□in□ ha□ □□□ □een reduced □r enlarged □□□ □□□□al □□□□ □□□ □ar □□ □□□ e□ad□ □□□ □inch □□□ the □□□□al □a□ □□□□ dra□in□ ha□ □hanged

DRA□ □ □□ DAT□
P□□,LLC □□□□□□

CCC □□□ □□□
□□□□□□A

□H□□T □□□

C□□□

PLAN I DESIGN I DELIVER
www.pinnacle-engr.com

PINNACLE ENGINEERING GROUP
ENGINEERING I NATURAL RESOURCES I SURVEYING

WISCONSIN OFFICE:
15850 W. BLUEMOUND ROAD
BROOKFIELD, WI 53005
(262) 754-8888
CHICAGO I MILWAUKEE : NATIONWIDE

P□□ □□□ □□□□□□□A

DRAFTED: DC
DESIGNED: AS
REVIEWED: MC

L□□□□D

	□A□ITAR□ □□□ □R MA□H□L□		DIR□CTI□□ □□ □□R□AC□ □L□□
	□T□RM □□□ □R MA□H□L□		DITCH □R □□ AL□
	□T□RM □T□RM CATCH □A□I□ □R□□□D CA□TI□□□		DI□□R□I□□ □□ AL□
	□T□RM □□□ □R CATCH □A□I□ □R□CTA□□□LAR CA□TI□□□		□□□R□L□□ R□LI□□ R□□TI□□
	PR□CA□T □LAR□D □□D □□CTI□□	SF	□ILT □□□C□
	CL□A□□□T		I□L□T PR□T□CTI□□
	□AL□□ □□□		C□□□TR□CTI□□ □□TRA□C□
	□IR□ H□DRA□T		H□DR□□□□D □P□R MA□□□ACT□R□R □P□CI□ICATI□□□□
	PR□P□□□D C□□T□□R		□R□□I□□ C□□TR□L □LA□□□T □□RTH AM□RICA□ □R□□□ □□□□R □□□AL□
750.0	PR□P□□□D □P□T □L□□ATI□□		T□R□ R□I□□□RC□M□□T MAT
	□ □TLA□D□		
	□L□□DPLAI□		
	HI□H □ AT□R L□□□L □H□ L□		
	□□RMAL □ AT□R L□□□L □□□ L□		

EXISTING CONDITIONS SURVEY:

□□I□TI□□ C□□DITI□□□ □□R□□□ PR□□ID□D □□ CHAP□T LA□D □□R□□□, LLC □□ □□□□M□□R □□, □□□□ A□D PI□□ACL□ □□□I□□□RI□□ □R□□P □□ □□L□ □□, □□□□□ ALTH□□□H PI□□ACL□ □□□I□□□RI□□ □R□□P HA□ □□ R□A□□□ T□ □□LI□□□ TH□ □□R□□□ I□ I□ACC□RAT□, P□□ MA□□□ □□T □ ARRA□T□ □R □□I□TI□□ I□□□RMATI□□ C□□TAI□□D □ ITHI□ TH□□□ PLA□□ I□ ALL I□CL□□I□□ □R ACC□RAT□□ ***CONTRACTOR SHALL UNDERTAKE NECESSARY EFFORTS TO VERIFY THE EXISTING CONDITIONS PRIOR TO THE START OF MATERIAL PROCUREMENT AND CONSTRUCTION EFFORTS/ACTIVITIES***

NOTES

1. SEE FIRST STABILIZATION PLAN SHEET FOR GENERAL EROSION AND SEDIMENT CONTROL NOTES.
2. SEE CONSTRUCTION DETAILS SECTION FOR ADDITIONAL INFORMATION PERTAINING TO THE SITE STABILIZATION PLAN.

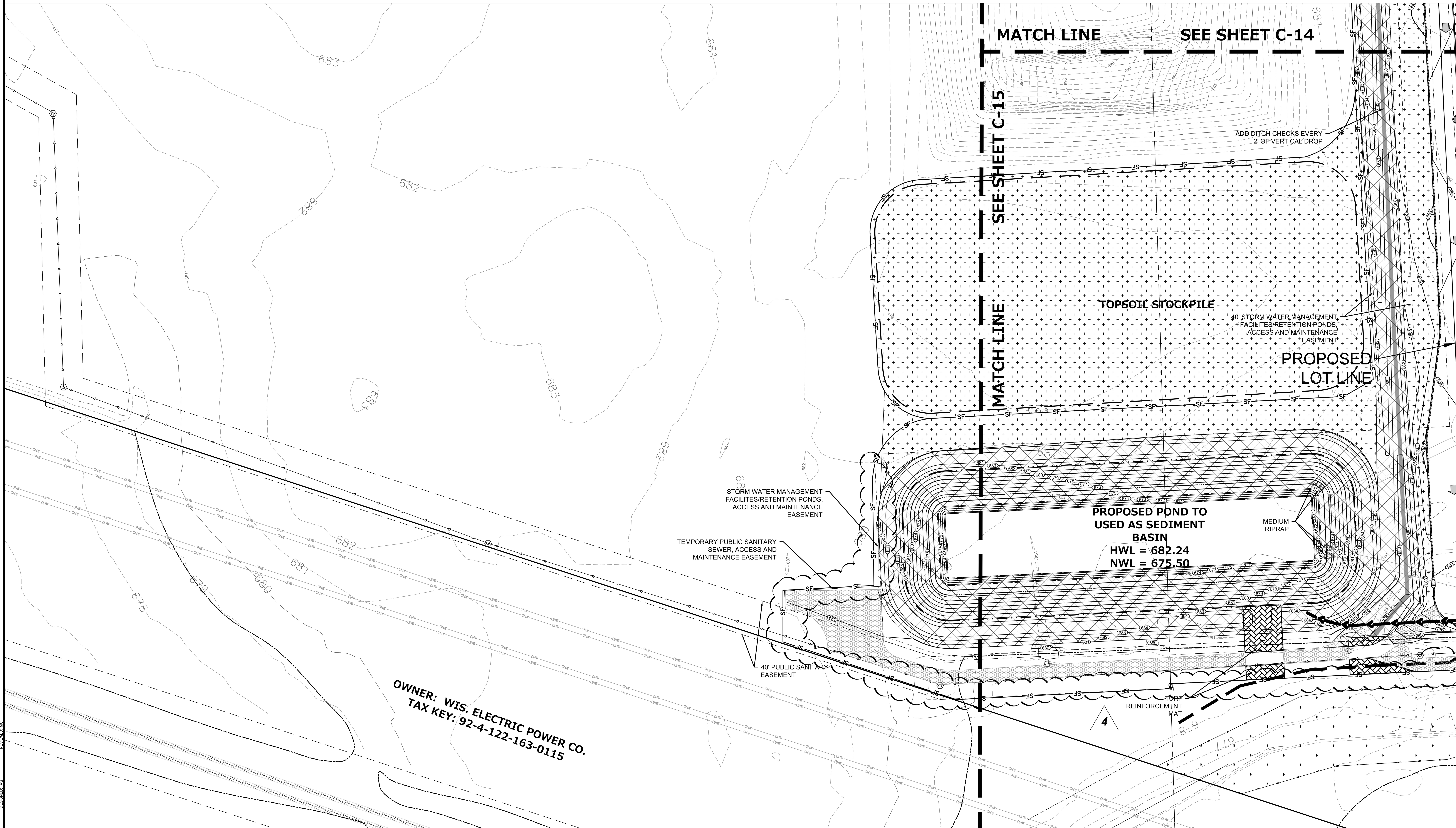

NORTH

GRAPHICAL SCALE (FEET)

0 1" = 40' 80'

DRAFTED: DC DESIGNED: AS REVIEWED: MC

PLAN I DESIGN I DELIVER
www.pinnacle-engr.com

PINNACLE ENGINEERING GROUP
ENGINEERING I NATURAL RESOURCES I SURVEYING

WISCONSIN OFFICE:
15850 W. BLUEMOUND ROAD
BROOKFIELD, WI 53005
(262) 754-8888
CHICAGO I MILWAUKEE : NATIONWIDE

P□□ □□□ □□□□□□□□A

This Document, Either as Drawing or the Assemblage of Electronic Data, is the Property of Commerce Construction Co., L.P. ("Commerce"). Thi□ d□cu□ent, includin□ all electr□nic data attached therein, □a□n□t □e re□r□duced, di□tri□uted, □□di□ied, u□ed □r i□□le□ented in an□ □a□ in □h□le □r in □art, without the written consent of Commerce. This document □hall n□t □e ta□en a□ a □□urtenant t□, a□□□ciated □ith, □r a□ a re□lace□ent □r the □□□icial □ealed d□cu□ent, and i□ without warranty of any kind either expressed or implied. An□ □er□□n □r □r□ani□ati□n □a□in□ u□e □□□r reli□n□□n thi□ d□cu□ent i□ re□□□n□i□le □□r c□n□ir□in□ it□ accurac□ and completeness. Commerce is not responsible for edited □r re□r□duced □er□i□n□ □□ di□ital data □□□ thi□ document. The acceptance or use of this document will □e c□n□trued a□ an acce□tance □□ the □□re□□in□.

R□□I□I□□□	□□	DAT□
□ID □□T		
ADDR□□□ □ILLA□□ C□MM□□T□	MAC	□□□□□□□□
ADDR□□□ □ILLA□□ C□MM□□T□	MAC	□□□□□□□□
ADDR□□□ □ILLA□□ C□MM□□T□	MAC	□□□□□□□□

C□MM□RC□ C□□□TR□CTI□□ C□,L.P□
□□□□ Cr□□r□ad□ Par□□a□□rth
□ith □□r
Cit□ □□Indu□tr□, Cali□□rnia □□□□□□□□□□□
Tele□h□ne □□□□□□□□□□□□□□
Licen□e □□□□□□□□□□

□IT□ □TA□ILI□ATI□□ PLA□
□□□I□□□RI□□ IMPR□□□M□□T□ PLA□□ □□R
MA□□□TIC □AD□□R L□□I□TIC□ C□□T□R
CTH "H" □ILLA□□ □□ PL□A□A□T PRAIRI□, □I

Dra□in□ Pl□t □ar
□" □"
□□e thi□ □l□t □ar t□ c□n□ir□ dra□in□ ha□ n□t □een reduced □r enlar□ed □r□□ □ri□inal. I□ thi□ □l□t □ar i□ n□t e□actl□ □ inch l□n□ the □h□□ical □i□e □□ dra□in□ ha□ chan□ed□

DRA□ □ □□: P□□,LLC
DAT□: □□□□□□□□

CCC □□□ □□□□ □□□□□□A

□H□□T □□□ C□□□

1.0 POTENTIAL POLLUTANT SOURCES

GIVEN THE PROPOSED ACTIVITY ON THE PROJECT SITE, THE PRIMARY POTENTIAL POLLUTANT SOURCE ASSOCIATED WITH THIS CONSTRUCTION PROJECT IS SOIL EROSION AND TRANSPORTATION; REFER TO SECTION 4 OF THIS PLAN. ADDITIONAL POTENTIAL SOURCES OF POLLUTION MAY INCLUDE: FUEL TANKS, WASTE CONTAINERS, OIL OR OTHER PETROLEUM PRODUCTS, DETERGENTS, PAINTS, CONSTRUCTION DEBRIS, SANITARY STATIONS, FERTILIZERS, AND DUST; REFER TO SECTION 5 OF THIS PLAN.

2.0 EROSION AND SEDIMENT CONTROL IMPLEMENTATION

THE FOLLOWING ARE DESCRIPTIONS OF THE EROSION AND SEDIMENT CONTROL PRACTICES THAT SHALL BE IMPLEMENTED DURING CONSTRUCTION OF THIS PROJECT. IN ADDITION TO THESE MEASURES, CONTRACTOR SHALL DISTURB ONLY AREAS NECESSARY TO COMPLETE THE CONSTRUCTION PROJECT. ALL PRACTICES SHALL BE CONDUCTED IN ACCORDANCE WITH THE BEST MANAGEMENT PRACTICES (BMP).

2.1 CONSTRUCTION AND EROSION CONTROL SEQUENCING

CONSTRUCTION SEQUENCING WILL BE UTILIZED AS A MEANS OF CONTROLLING EROSION AND LIMITING SEDIMENT TRANSPORT. SEQUENCING AS LISTED BELOW IS GENERAL IN NATURE AND MAY VARY DEPENDING ON WEATHER CONDITIONS AND/OR PHASING OF CONSTRUCTION. THE CONTRACTOR SHALL SUBMIT A DETAILED SITE SEQUENCING PLAN TO OWNER FOR APPROVAL AT LEAST 5 BUSINESS DAYS PRIOR TO COMMENCEMENT OF ANY CONSTRUCTION ACTIVITIES. CONTRACTOR MAY MODIFY SEQUENCING AFTER ITEM 6 AS NEEDED TO COMPLETE CONSTRUCTION ONLY IF EROSION CONTROLS ARE MAINTAINED IN ACCORDANCE WITH THE CONSTRUCTION SITE EROSION AND SEDIMENT CONTROL REQUIREMENTS.

1. INSTALL TEMPORARY CONSTRUCTION ENTRANCES, INLET PROTECTION ON EXISTING STORM SEWER AND CULVERT INLET LOCATIONS, AND PERIMETER SILT FENCING.
2. INSTALL SILT FENCING ALONG THE PERIMETER OF PROPOSED TOPSOIL STOCKPILE LOCATIONS. THE FIRST TOPSOIL DEPOSITED WITHIN THE STOCKPILE LIMITS SHALL BE PLACED TO CREATE TEMPORARY BERMING ALONG THE SILT FENCE TO PREVENT DIRECT STORMWATER RUNOFF AGAINST SILT FENCING. CONTRACTOR SHALL LIMIT LAND DISTURBING ACTIVITIES ASSOCIATED WITH TEMPORARY BERMING TO A MINIMUM.
3. STRIP TOPSOIL WITHIN THE LIMITS OF THE SEDIMENT TRAPS THAT WILL BE USED FOR TEMPORARY SEDIMENT CONTROL. STRIPPED TOPSOIL SHALL BE PLACED TO CONSTRUCT DIVERSION BERMING OR PLACED WITHIN THE STOCKPILE LIMITS.
4. STRIP TOPSOIL ALONG THE REMAINDER OF DIVERSION BERMING AND IMMEDIATELY PLACE TOPSOIL TO CREATE THE BERMING. MASS TOPSOIL STRIPPING SHALL NOT OCCUR UNTIL ALL DOWNSTREAM SEDIMENT CONTROLS ARE IN PLACE.
5. CONDUCT ROUGH GRADING OPERATIONS AND UTILITY PIPING INSTALLATION. DRAIN TILE SHALL NOT BE INSTALLED UNTIL UPLAND AREAS CONTRIBUTING STORMWATER RUNOFF ARE STABILIZED. DITCH CHECKS SHALL BE INSTALLED WITHIN DRAINAGE DITCHES IMMEDIATELY FOLLOWING CREATION OF DITCHES AND INLET PROTECTION SHALL BE INSTALLED TO PROTECT ANY STORM SEWER OR CULVERTS THAT WILL FUNCTION DURING CONSTRUCTION.
6. FINE GRADE SUB-GRADE SOILS WITHIN PAVEMENT AND BUILDING LIMITS. PLACE STONE BASE MATERIAL AS SOON AS POSSIBLE FOLLOWING COMPLETION OF FINE GRADING EFFORTS.
7. FINE GRADE REMAINING DISTURBED AREAS. PLACE SALVAGED TOPSOIL, EROSION BLANKETS/MATTING, AND SEED/MULCH AS SOON AS POSSIBLE FOLLOWING COMPLETION OF FINE GRADING EFFORTS.
8. EROSION CONTROLS SHALL NOT BE REMOVED UNTIL SITE IS FULLY STABILIZED OR 70% VEGETATIVE COVER IS ESTABLISHED. CONTRACTOR IS RESPONSIBLE FOR REMOVAL OF SILT FENCE, TEMPORARY FENCING/PRETECTION, DITCH CHECKS, AND OTHER TEMPORARY CONTROLS, AND RESTORATION PRACTICES AS NECESSARY, TO THE SATISFACTION OF THE OWNER.

2.2 STABILIZATION PRACTICES

THE DATES WHEN MAJOR GRADING ACTIVITIES OCCUR, WHEN CONSTRUCTION ACTIVITIES TEMPORARILY OR PERMANENTLY CEASE ON A PORTION OF THE SITE, AND WHEN STABILIZATION MEASURES ARE INITIATED, SHALL BE RECORDED ON THE STABILIZATION SCHEDULE FOR MAJOR GRADING ACTIVITIES.

STABILIZATION MEASURES SHALL BE INITIATED AS SOON AS PRACTICABLE IN PORTIONS OF THE SITE WHERE CONSTRUCTION ACTIVITIES HAVE TEMPORARILY OR PERMANENTLY CEASED. NO MORE THAN SEVEN (7) DAYS SHALL PASS AFTER THE CONSTRUCTION ACTIVITY IN THAT PORTION OF THE SITE HAS PERMANENTLY CEASED UNLESS:

THE INITIATION OF STABILIZATION MEASURES BY THE SEVENTH (7) DAY AFTER CONSTRUCTION ACTIVITY TEMPORARILY OR PERMANENTLY CEASE IS PRECLUDED BY SNOW COVER. IN THAT EVENT, STABILIZATION MEASURE SHALL BE INITIATED AS SOON AS PRACTICABLE.

CONSTRUCTION ACTIVITY WILL RESUME ON A PORTION OF THE SITE WITHIN FOURTEEN (14) DAYS FROM WHEN ACTIVITIES CEASED, (I.E. THE TOTAL TIME PERIOD THAT THE CONSTRUCTION ACTIVITY IS TEMPORARILY CEASED IS LESS THAN FOURTEEN (14) DAYS). IN THAT EVENT, STABILIZATION MEASURES DO NOT HAVE TO BE INITIATED ON THAT PORTION OF THE SITE BY THE SEVENTH (7) DAY AFTER CONSTRUCTION ACTIVITY HAS TEMPORARILY CEASED. SEE THE SOIL PROTECTION CHART PRESENTED IN THE CONSTRUCTION DOCUMENTS FOR RATES OF PERMANENT AND TEMPORARY VEGETATION.

STABILIZATION MEASURES SHALL BE DETERMINED BASED ON SITE CONDITIONS AT THE TIME CONSTRUCTION ACTIVITY HAS CEASED, INCLUDING BUT NOT LIMITED TO WEATHER CONDITIONS AND LENGTH OF TIME MEASURE MUST BE EFFECTIVE. THE FOLLOWING ARE ACCEPTABLE STABILIZATION MEASURES.

PERMANENT SEEDING; IN ACCORDANCE WITH APPROVED LANDSCAPING PLAN
TEMPORARY SEEDING MAY CONSIST OF SPRING OATS (100LBS/ACRE) AND/OR WHEAT OR CEREAL RYE (150LBS/ACRE)
HYDRO-MULCHING WITH A TACKIFIER
GEOTEXTILE EROSION MATTING
SODDING

2.3 STRUCTURAL PRACTICES

THE FOLLOWING ARE DESCRIPTIONS OF STRUCTURAL PRACTICES TO BE IMPLEMENTED TO DIVERT FLOWS FROM EXPOSED SOILS, STORE FLOWS, OR OTHERWISE LIMIT THE DISCHARGE OF POLLUTANTS FROM EXPOSED AREAS OF THE SITE INCLUDING THE PROPOSED AND EXISTING WETLAND AREAS. SUCH PRACTICES COULD INCLUDE SILT FENCE, PROTECTION FENCE, CONSTRUCTION ENTRANCE, DITCH CHECK, EROSION CONTROL MATTING, DIVERSION BERM/SWALE, SEDIMENT TRAP, LEVEL SPREADER, INLET PROTECTION, OUTLET PROTECTION, AND TEMPORARY OR PERMANENT SEDIMENT BASIN. THE FOLLOWING STRUCTURAL PRACTICES ARE TO BE UTILIZED DURING THIS PROJECT.

SILT FENCE SHALL BE PLACED DOWN SLOPE OF DISTURBED AREAS OF THE CONSTRUCTION SITE AND AROUND THE PERIMETER OF THE TOPSOIL STOCKPILE. THIS INCLUDES PROTECTION OF EXISTING WETLAND AREAS TO BE MAINTAINED. SILT FENCE MAY ALSO BE USED AS A TEMPORARY CONTROL DEVICE WHERE SEDIMENTATION RUNOFF IS DISCOVERED.

CONSTRUCTION ENTRANCE SHALL BE INSTALLED TO REDUCE SOIL EROSION POLLUTANTS FROM LEAVING THE SITE DURING CONSTRUCTION ACTIVITIES. IF THE CRUSHED STONE DOES NOT ADEQUATELY REMOVE MUD FROM VEHICLE TIRES, THEY SHALL BE HOSED OFF BEFORE ENTERING A PAVED ROADWAY. ANY SOIL DEPOSITED ON THE PUBLIC PAVED ROAD WAY SHALL BE REMOVED IMMEDIATELY.

DITCH CHECK (STRAW BALES) SHALL BE INSTALLED IN DRAINAGE CHANNELS AS NEEDED.

EROSION CONTROL MATTING SHALL BE PLACED ON AREAS OR EMBANKMENTS HAVING SLOPES GREATER THAN OR EQUAL TO 3H:1V, BEFORE VEGETATION IS ESTABLISHED.

DIVERSION BERM/SWALE SHALL BE CONSTRUCTED TO DIVERT RUNOFF AROUND THE SITE AND TO DIVERT RUNOFF FROM THE DISTURBED AREA TO A SEDIMENT TRAP OR OTHER CONTROL. BERMS/SWALES SHALL BE STABILIZED WITH EQUIPMENT TRACKING AND TEMPORARY SEEDING.

SEDIMENT TRAPS/BASIN SHALL BE CONSTRUCTED TO COLLECT RUNOFF AND RUNOFF FROM SITE DIVERSION BERMS/SWALES.

INLET PROTECTION SHALL BE INSTALLED AT STORMWATER DRAINAGE INLETS TO REDUCE SEDIMENT WITHIN STORM SEWER CONVEYANCE FEATURES.

OUTLET SCOUR PROTECTION SHALL BE INSTALLED AT STORMWATER DRAINAGE OUTLETS TO DIFFUSE FLOWS.

3.0 ADDITIONAL PRACTICES

ADDITIONAL POLLUTANT CONTROL MEASURES TO BE IMPLEMENTED DURING CONSTRUCTION ACTIVITIES SHALL INCLUDE, BUT NOT BE LIMITED TO THE FOLLOWING.

CONSTRUCTION WASTE SHALL BE PROPERLY DISPOSED OF. THIS INCLUDES ALL CONSTRUCTION SITE WASTE MATERIAL, SANITARY WASTE, AND WASTE FROM VEHICLE TRACKING OF SEDIMENTS. THE CONTRACTOR SHALL ENSURE THAT NO MATERIAL WASTES OR UNUSED BUILDING MATERIALS SHALL BE BURIED, DUMPED, BURNED, OR DISCHARGED TO THE WATERS OF THE STATE. VEHICLES HAULING MATERIAL AWAY FROM THE SITE SHALL BE COVERED WITH A TARPAULIN TO PREVENT BLOWING DEBRIS.

DUST CONTROL SHALL BE ACCOMPLISHED BY ONE OR MORE OF THE FOLLOWING METHODS:

COVERING 30% OR MORE OF THE SOIL SURFACE WITH A NON-ERODIBLE MATERIAL.

ROUGHENING (EQUIPMENT TRACKING) THE SOIL TO PRODUCE RIDGES PERPENDICULAR TO THE PREVAILING WIND. RIDGES SHALL BE AT LEAST SIX (6) INCHES IN HEIGHT.

FREQUENT WATERING OF EXCAVATION AND FILL AREAS.

PROVIDING GRAVEL OR PAVING AT ENTRANCE/EXIT DRIVES, PARKING AREAS AND TRANSIT PATHS.

STREET SWEEPING SHALL BE PERFORMED TO IMMEDIATELY REMOVE ANY SEDIMENT TRACKED ON PAVEMENTS.

4.0 EROSION AND SEDIMENT STRUCTURAL PRACTICE MAINTENANCE

THE FOLLOWING MAINTENANCE PRACTICES SHALL BE USED TO MAINTAIN, IN GOOD AND EFFECTIVE OPERATING CONDITIONS, VEGETATION, EROSION AND SEDIMENT CONTROL MEASURES, AND OTHER PROTECTIVE MEASURES IDENTIFIED IN THIS PLAN. UPON IDENTIFICATION, DEFICIENCIES IN STORMWATER CONTROLS SHALL BE ADDRESSED IMMEDIATELY. THE MAINTENANCE PROCEDURES FOR THIS DEVELOPMENT SHALL INCLUDE, BUT NOT BE LIMITED TO THE BELOW.

SILT FENCE - REPAIR OR REPLACE ANY DAMAGED FILTER FABRIC AND/OR STAKES. REMOVE ACCUMULATED SEDIMENT WHEN IT HAS REACHED ONE-HALF THE ABOVE GROUND HEIGHT OF THE FENCE.

CONSTRUCTION ENTRANCE - AS NEEDED, ADD STONE TO MAINTAIN CONSTRUCTION ENTRANCE DIMENSIONS AND EFFECTIVENESS.

DITCH CHECK (STRAW BALES) - RE-SECURE STAKES; ADJUST OR REPOSITION BALES TO ADDRESS PROPER FLOW OF STORMWATER; AND REMOVE ACCUMULATED SEDIMENT WHEN IT HAS REACHED ONE-HALF THE HEIGHT OF THE BALE.

EROSION CONTROL MATTING - REPAIR MATTING IMMEDIATELY IF INSPECTION REVEALS BREACHED OR FAILED CONDITIONS. REPAIR AND RE-GRADE SOIL WHERE CHANNELIZATION HAS OCCURRED.

DIVERSION BERM/SWALE - REPLACE OR RE-COMPACT THE CONSTRUCTION MATERIALS AS NECESSARY.

SEDIMENT TRAP - REMOVE AND DISPOSE OF THE ACCUMULATED SEDIMENT WHEN IT HAS REACHED THE SEDIMENT STORAGE ELEVATION.

INLET PROTECTION - CLEAN, REPAIR OR REPLACE FILTER FABRIC AND/OR STONE WHEN CONTROL MEASURE IS CLOGGED. INLET FILTER BAGS SHALL BE REPLACED ONCE ONE-HALF FULL OF SEDIMENT.

OUTLET PROTECTION - CLEAN, REPAIR OR REPLACE FILTER FABRIC, TURF REINFORCEMENT MATTING AND/OR STONE WHEN CONTROL MEASURE IS ONE-HALF FULL OF SEDIMENT.

SEDIMENT BASIN - AT THE END OF CONSTRUCTION, CONTRACTOR SHALL REMOVE AND DISPOSE OF THE ACCUMULATED SEDIMENT AND RESTORE BASIN AREA TO INTENDED POST-CONSTRUCTION DESIGN GRADES.

5.0 INSPECTION

INSPECTIONS SHALL BE COMPLETED WITHIN TWENTY-FOUR (24) HOURS OF THE END OF A RAINFALL EVENT THAT IS ONE-HALF INCH OR GREATER OR EQUIVALENT SNOWFALL, OR AT A MINIMUM ONCE EVERY SEVEN (7) CALENDAR DAYS. INSPECTIONS SHALL BE UNDERTAKEN BY QUALIFIED PERSONNEL PROVIDED BY THE CONTRACTOR, AND SHALL INCLUDE: DISTURBED AREAS OF THE CONSTRUCTION SITE THAT HAVE NOT BEEN FINALLY STABILIZED, STRUCTURAL CONTROL MEASURES, AND LOCATIONS WHERE VEHICLES ENTER OR EXIT THE SITE. A STORMWATER POLLUTION PREVENTION PLAN INSPECTION REPORT SHALL BE COMPLETED AND ADDED TO THE SWPPP. RAINFALL SHALL BE RECORDED ON THE SWPPP RAINFALL LOG. CONTRACTOR SHALL IMMEDIATELY ARRANGE FOR REPAIR OR REPLACEMENT OF ANY DAMAGED OR DEFICIENT CONTROL MEASURES OBSERVED DURING THE INSPECTION.

QUALIFIED PERSONNEL MEANS A PERSON KNOWLEDGEABLE IN THE PRINCIPLES AND PRACTICES OF EROSION AND SEDIMENT CONTROL MEASURES, SUCH AS A LICENSED PROFESSIONAL ENGINEER, A CERTIFIED PROFESSIONAL IN EROSION AND SEDIMENT CONTROL, A CERTIFIED EROSION SEDIMENT OR STORMWATER INSPECTOR, OR OTHER TRAINED INDIVIDUAL.

6.0 SPILL PREVENTION

6.1 GENERAL MATERIAL MANAGEMENT PRACTICES

THE GOOD HOUSEKEEPING PRACTICES LISTED BELOW SHALL BE FOLLOWED THROUGHOUT THE CONSTRUCTION PROJECT.

1. CONTRACTOR SHALL STORE ONLY ENOUGH PRODUCTS REQUIRED TO COMPLETE THIS PROJECT.
2. ALL MATERIAL SHALL BE STORED IN A NEAT, ORDERLY MANNER IN THEIR ORIGINAL CONTAINERS CONTAINING MANUFACTURER'S LABEL.
3. MANUFACTURERS' RECOMMENDATIONS FOR PROPER USE AND DISPOSAL SHALL BE FOLLOWED.
4. MATERIALS REQUIRED TO HAVE A MATERIAL SAFETY DATA SHEET (MSDS) SHALL HAVE A COPY STORED IN THE PROJECT'S MSDS DATABASE.

6.2 SPILL CONTROL PRACTICES

THE PRACTICES LISTED BELOW SHALL BE FOLLOWED FOR SPILL PREVENTION AND CLEANUP.

1. MATERIALS AND EQUIPMENT NECESSARY FOR SPILL CLEANUP SHALL BE MAINTAINED ONSITE.
2. IMMEDIATELY UPON DISCOVERY, ALL SPILLS SHALL BE CLEANED UP ACCORDING TO THE MANUFACTURERS' RECOMMENDED METHODS.
3. PERSONNEL CLEANING UP A SPILL SHALL USE PERSONAL PROTECTIVE EQUIPMENT.
4. IMMEDIATELY UPON DISCOVERY, SPILLS OF TOXIC OR HAZARDOUS MATERIALS SHALL BE REPORTED TO THE OWNER AND GENERAL CONTRACTOR.
5. NOTIFICATION AND REPORTING TO THE APPROPRIATE FEDERAL, STATE, AND LOCAL GOVERNMENT AGENCIES SHALL BE MADE AS REQUIRED.

GENERAL INFORMATION:

THIS STORMWATER POLLUTION PREVENTION PLAN (SWPPP) HAS BEEN DEVELOPED TO FULFILL ONE OF THE REQUIREMENTS OF THE GENERAL ENVIRONMENTAL PROTECTION AGENCY (EPA) NATIONAL POLLUTION DISCHARGE ELIMINATION SYSTEM (WISCONSIN POLLUTION DISCHARGE ELIMINATION SYSTEM "WPDES" PERMIT NO. WI-S067831-4) FOR THE DISCHARGE OF STORMWATER ASSOCIATED WITH CONSTRUCTION PROJECTS DISTURBING ONE ACRE OR MORE. THE OWNER AND CONTRACTORS SHALL COMPLY WITH ALL REQUIREMENTS OF THE WPDES FOR ALL SUCH CONSTRUCTION PROJECTS. THE STORMWATER DISCHARGES ASSOCIATED WITH THE CONSTRUCTION ACTIVITY FROM THIS SITE ARE SUBJECT TO THE CONDITIONS AND REQUIREMENTS OF THE PERMITS.

THE EXECUTED OWNER CERTIFICATION AND THE CONTRACTOR CERTIFICATIONS SHALL BE KEPT ONSITE WITH THE APPROVED PLANS.

SWPPP AVAILABILITY:

THE OWNER SHALL RETAIN A COPY OF THE SWPPP AT THE CONSTRUCTION SITE FROM THE DATE OF THE PROJECT INITIATION TO THE DATE OF FINAL STABILIZATION.

KEEPING PLANS CURRENT:

THE CONTRACTOR SHALL AMEND THE PLAN WHENEVER THERE IS A CHANGE IN DESIGN, CONSTRUCTION, OPERATION, OR MAINTENANCE, WHICH HAS A SIGNIFICANT EFFECT ON THE POTENTIAL FOR THE DISCHARGE OF POLLUTANTS TO THE WATERS OF THE STATE AND WHICH HAS NOT OTHERWISE BEEN ADDRESSED IN THE PLAN OR IF THE PLAN PROVES TO BE INEFFECTIVE IN ELIMINATING OR SIGNIFICANTLY CONTROLLING POLLUTANTS IN STORMWATER DISCHARGES ASSOCIATED WITH CONSTRUCTION SITE ACTIVITY. IN ADDITION, THE THE PLAN SHALL BE AMENDED TO IDENTIFY ANY NEW CONTRACTOR AND/OR SUBCONTRACTOR THAT WILL IMPLEMENT A MEASURE OF THE PLAN. AMENDMENTS TO THE PLAN MAY BE REQUIRED BY THE MUNICIPALITY, OWNER, OR OTHER REVIEWING AGENCY. COPIES OF THE AMENDMENTS SHALL BE KEPT ONSITE AS PART OF THE SWPPP.

RETENTION OF RECORDS:

THE OWNER SHALL RETAIN COPIES OF THIS AND ALL REPORTS AND NOTICES REQUIRED BY THIS PERMIT, AND RECORDS OF ALL DATA USED TO COMPLETE THE NOTICE OF INTENT TO BE COVERED BY THIS PERMIT, FOR A PERIOD OF AT LEAST THREE YEARS FROM THE DATE PERMIT COVERAGE EXPIRES OR IS TERMINATED. THIS PERIOD MAY BE EXTENDED BY THE REQUEST OF THE AGENCY AT ANY TIME. IN ADDITION, THE OWNER SHALL RETAIN A COPY OF THE PLAN REQUIRED BY THIS PERMIT AT THE CONSTRUCTION SITE FROM THE DATE OF PROJECT INITIATION TO THE DATE OF FINAL STABILIZATION.

A NOTICE OF INTENT (NOI) APPLICATION MUST BE COMPLETED AND INCORPORATED INTO THE SWPPP.

WPDES NOTICE OF TERMINATION GUIDANCE:

WHEN A SITE HAS BEEN FINALLY STABILIZED AND ALL STORMWATER DISCHARGES FROM CONSTRUCTION SITES THAT ARE AUTHORIZED BY THE PERMIT ARE ELIMINATED, THE OWNER OF THE FACILITY MUST SUBMIT A COMPLETED NOTICE OF TERMINATION THAT IS SIGNED IN ACCORDANCE WITH THE PERMIT. CONTRACTOR SHALL SUBMIT A COMPLETED NOTICE OF TERMINATION TO OWNER FOR EXECUTION PRIOR TO THEIR FINAL PAY APPLICATION REQUEST.

CONTROL MEASURE GROUP	CONTROL MEASURE	CONTROL MEASURE CHARACTERISTICS
VEGETATIVE SOIL COVER	TEMPORARY SEEDING	PROVIDES QUICK TEMPORARY COVER TO CONTROL EROSION WHEN PERMANENT SEEDING IS NOT DESIRED OR TIME OF YEAR IS INAPPROPRIATE.
	PERMANENT SEEDING	PROVIDES PERMANENT VEGETATIVE COVER TO CONTROL EROSION, FILTERS SEDIMENT FROM WATER. MAY BE PART OF FINAL LANDSCAPE PLAN.
NON VEGETATIVE SOIL COVER	AGGREGATE COVER	PROVIDES TEMPORARY COVER ON ROADS AND PARKING LOTS AND AREAS WHERE VEGETATION CANNOT BE ESTABLISHED. PREVENTS MUD FROM BEING PICKED UP AND TRANSPORTED OFF-SITE.
	PAVING	PROVIDES PERMANENT COVER ON PARKING LOTS AND ROADS OR OTHER AREAS WHERE VEGETATION CANNOT BE ESTABLISHED.
DIVERSIONS	DIVERSION BERM / SWALE	DIVERTS RUNOFF TO A SEDIMENT TRAP OR OTHER CONTROL.
ENCLOSED DRAINAGE	STORM SEWER	CONVEYS SEDIMENT LADEN WATER TO A SEDIMENT BASIN.
OUTLETS	APRON ENDWALL OR RIPRAP	PROTECTS DOWNSTREAM CHANNEL FROM HIGH VELOCITY OF FLOW DISCHARGING FROM STRUCTURE.
SEDIMENT BASINS	TEMPORARY SEDIMENT TRAP	CONSTRUCTED TO REMOVE SILTATION FROM RUNOFF FROM SITE DIVERSION BERMS/SWALES AND IN OVERLAND FLOOD ROUTE. CAN BE CONVERTED TO PERMANENT SEDIMENT BASIN.
SEDIMENT FILTERS	SILT FENCE	PLACED DOWN SLOPE OF DISTURBED AREA TO KEEP RUNOFF CONTAINED ON-SITE.
	INLET PROTECTION	INSTALLED IN OPEN GRATE STRUCTURES TO COLLECT SEDIMENT.
	DITCH CHECK	PLACED IN DRAINAGE CHANNELS TO FILTER SEDIMENT FROM RUNOFF.
MUD AND DUST CONTROL	CONSTRUCTION ENTRANCE	REDUCES SOIL EROSION POLLUTANTS BEING TRANSPORTED OFF-SITE.
	STREET SWEEPING	REDUCES POLLUTANTS TRACKED FROM CONSTRUCTION SITE.
	DUST CONTROL	PREVENTS DUST FROM LEAVING CONSTRUCTION SITE.

STABILIZATION EFFECTIVENESS (TIME OF YEAR)

STABILIZATION TYPE	STABILIZATION UTILIZATION PERIODS											
	JAN.	FEB.	MAR.	APR.	MAY	JUNE	JULY	AUG.	SEPT.	OCT.	NOV.	DEC.
PERMANENT SEEDING			A	*	*	*	*	*	*			
DORMANT SEEDING	B										B	
TEMPORARY SEEDING			C	*	*	*	D *	*	*			
SODDING			E	*	*	*	*	*	*			

A. KENTUCKY BLUEGRASS 90 LBS/ACRE MIXED WITH PERENNIAL RYEGRASS 30 LBS/ACRE.
B. KENTUCKY BLUEGRASS 135 LBS/ACRE MIXED WITH PERENNIAL RYEGRASS 45 LBS/ACRE + 2 TONS STRAW MULCH/ACRE.
C. SPRING OATS 100 LBS/ACRE.
D. WHEAT OR CEREAL RYE 150 LBS/ACRE.
E. SOD.
F. STRAW MULCH 2 TONS/ACRE.
* IRRIGATION/WATERING REQUIRED TO SUPPORT ESTABLISHMENT AS NEEDED.

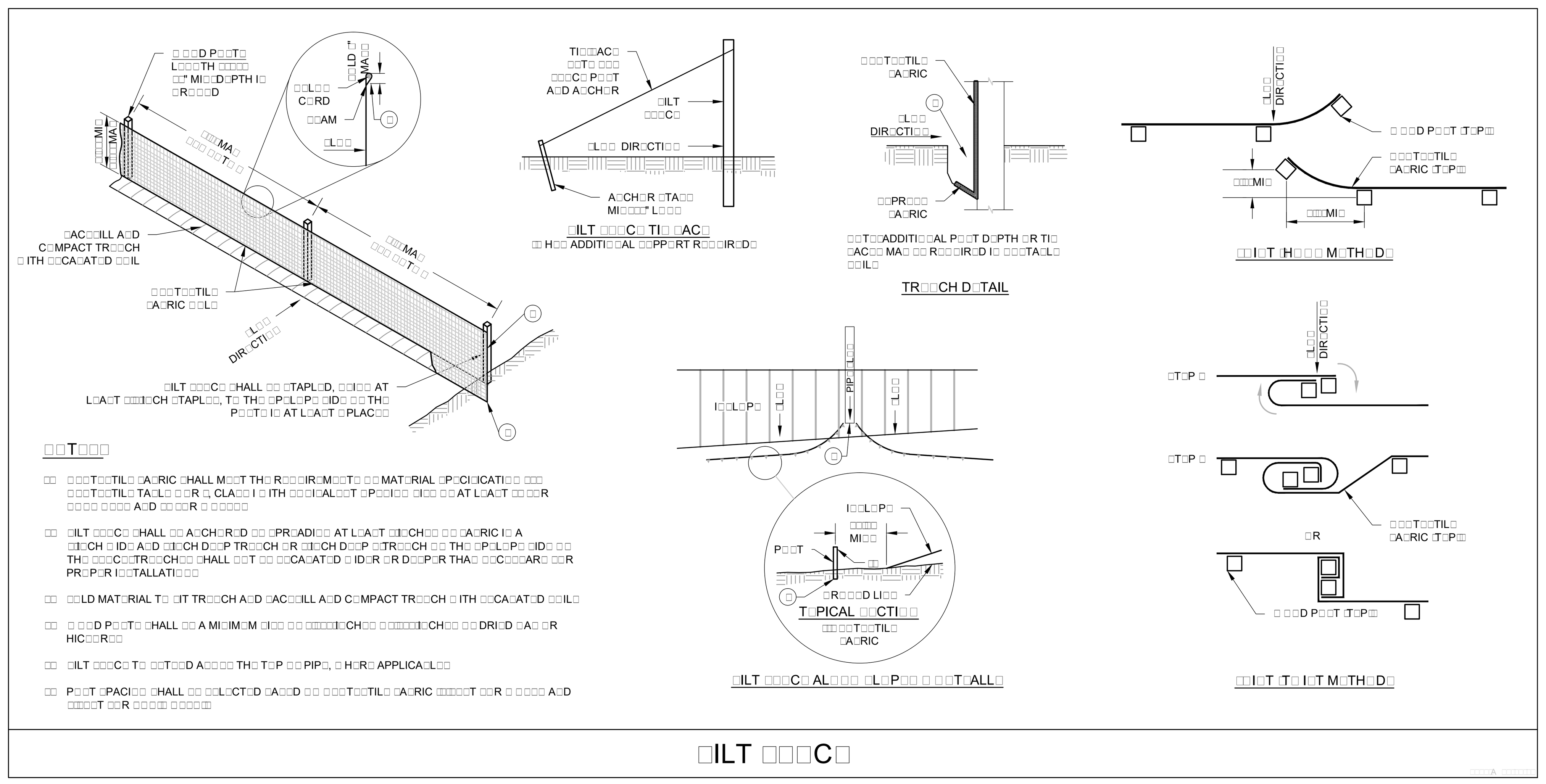

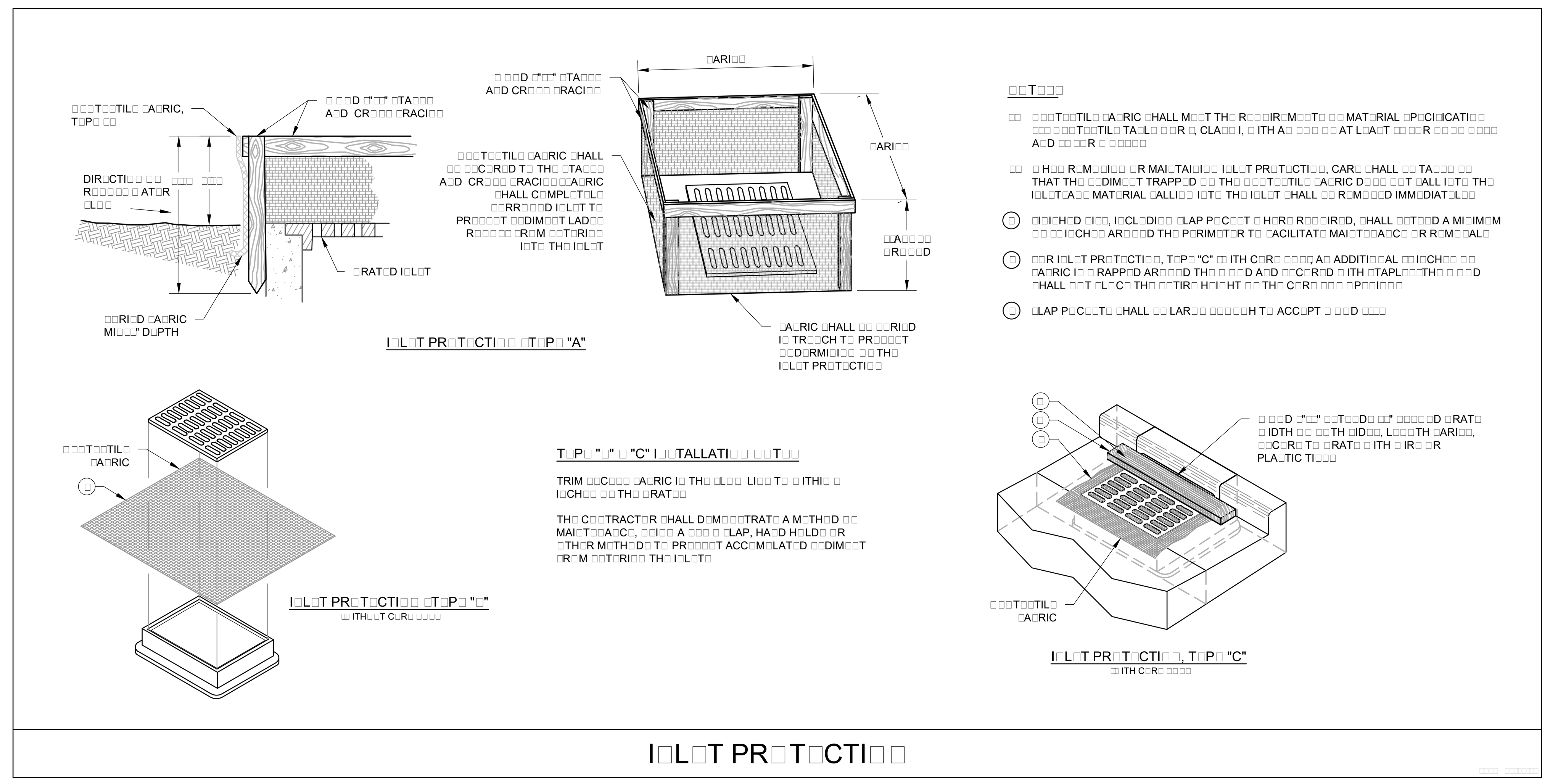

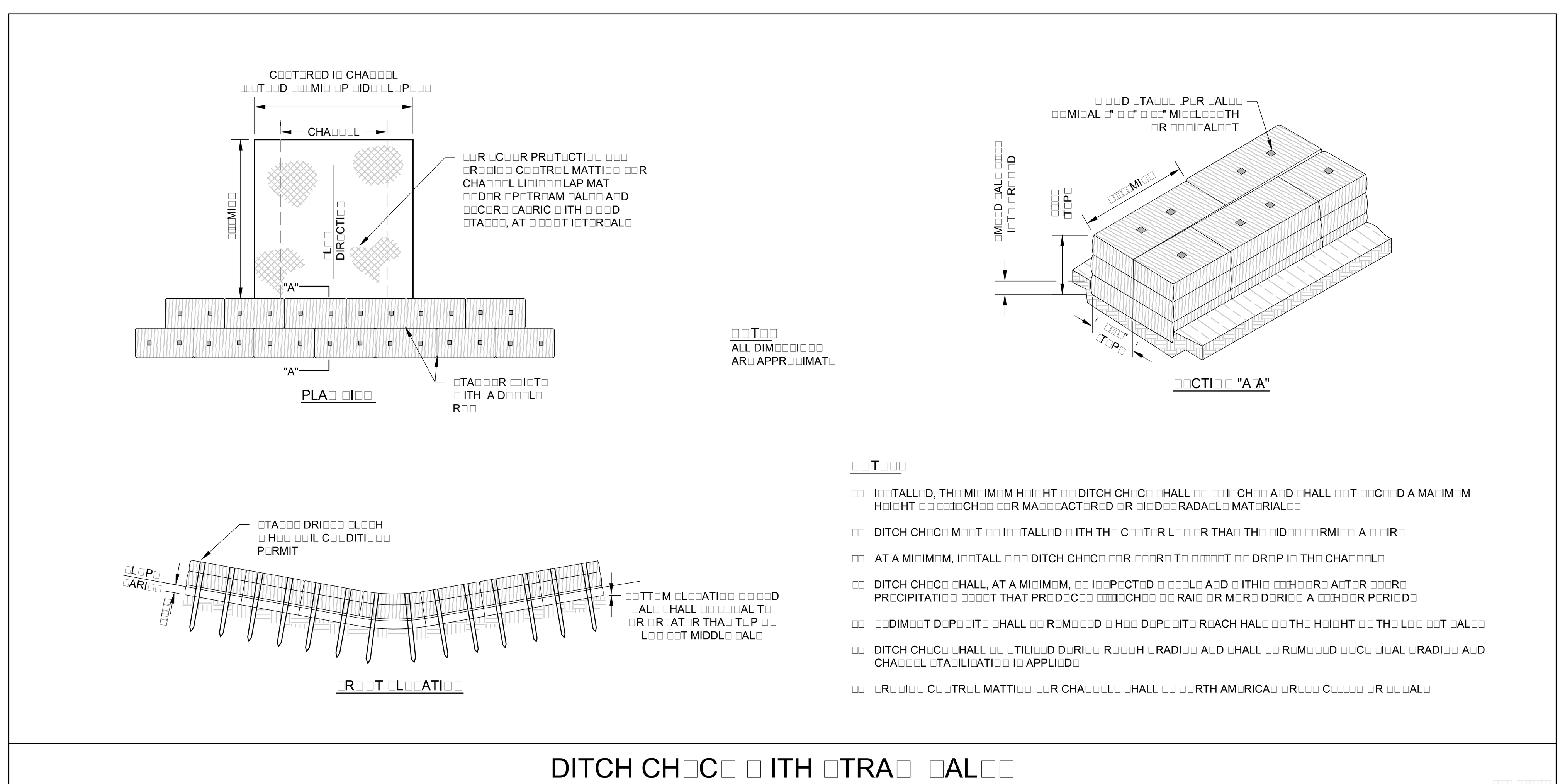

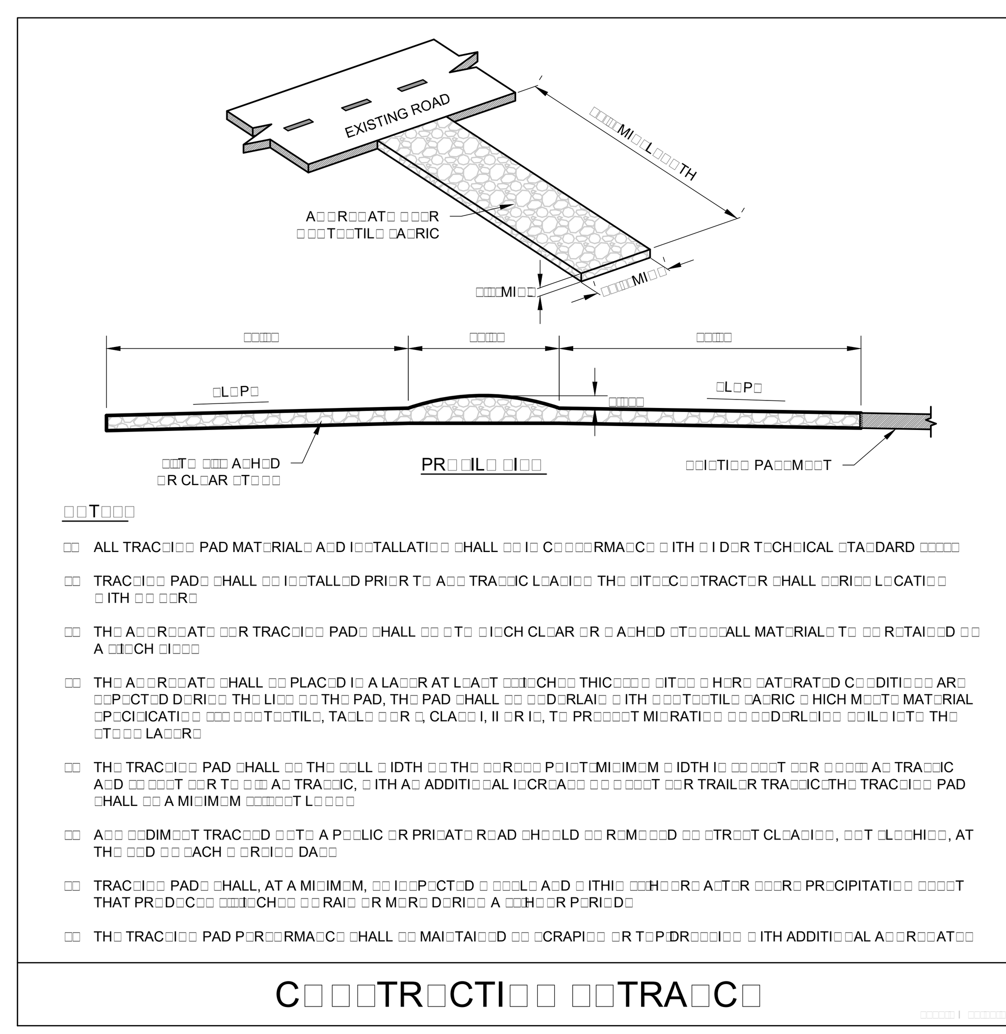

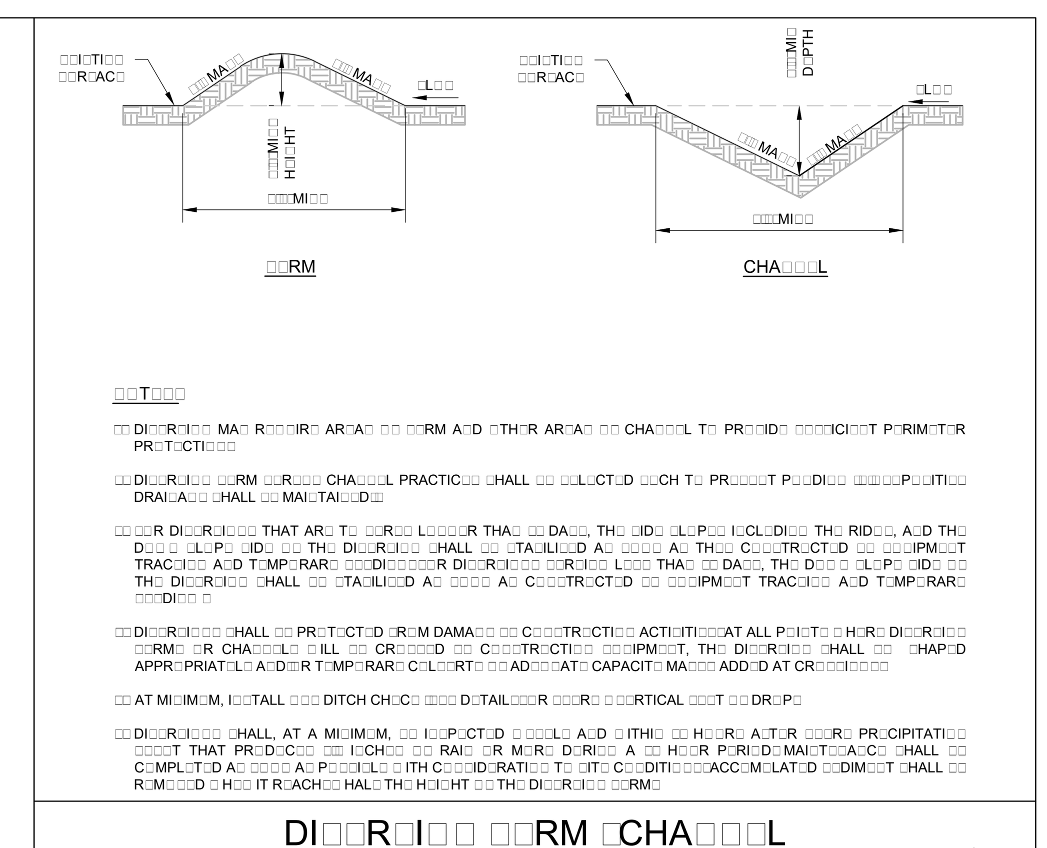

PLAN I DESIGN I DELIVER
www.pinnacle-engr.com

PINNACLE ENGINEERING GROUP
ENGINEERING I NATURAL RESOURCES I SURVEYING

WISCONSIN OFFICE:
15850 W. BLUEMOUND ROAD
BROOKFIELD, WI 53005
(262) 754-8888
CHICAGO I MILWAUKEE : NATIONWIDE

This Document, Either as Drawing or the Assemblage of Electronic Data, is the Property of Commerce Construction Co., L.P. ("Commerce")

DRAFTED: DC DESIGNED: AS REVIEWED: MC

CTH "H"

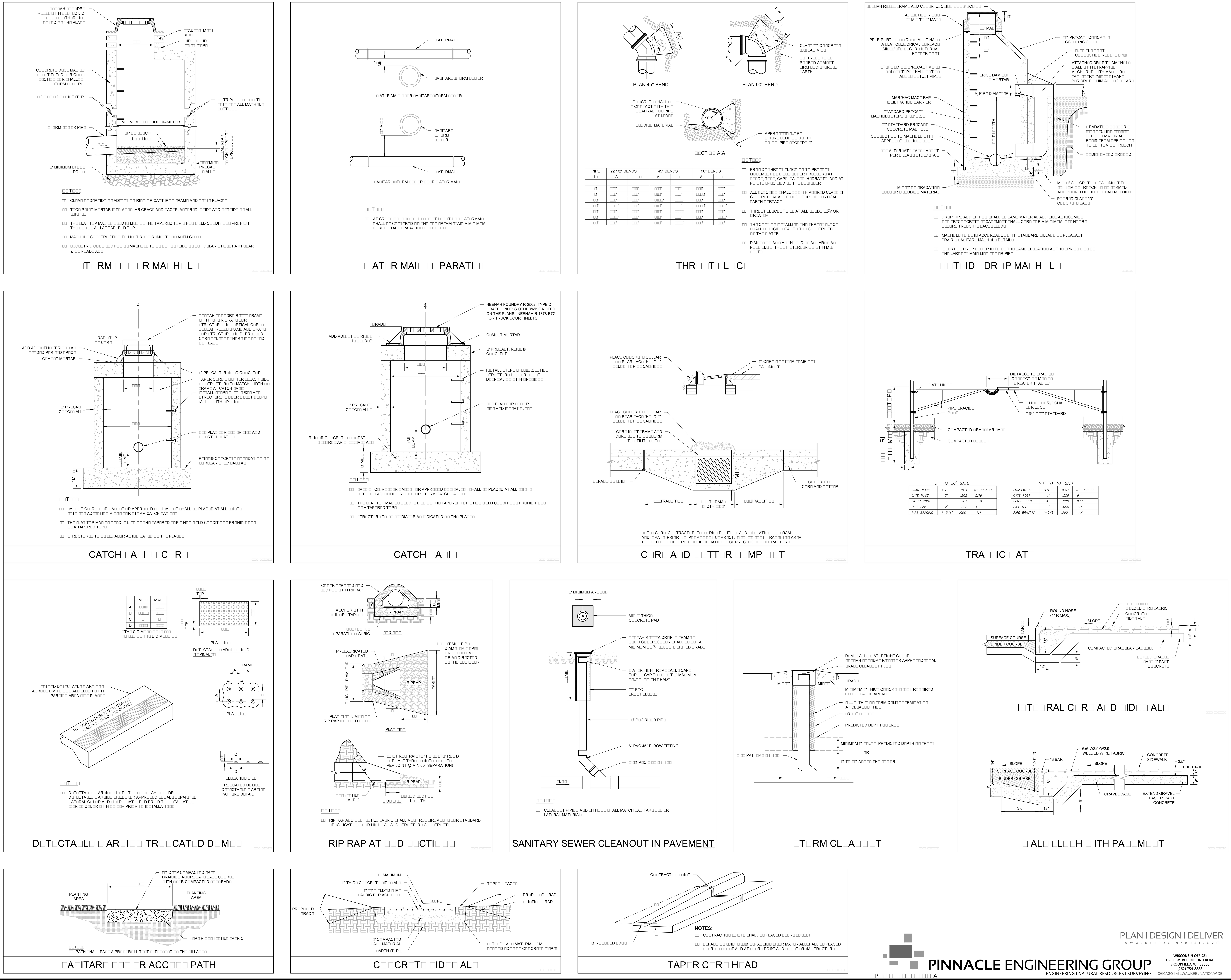

PLAN I DESIGN I DELIVER
www.pinnacle-engr.com

PINNACLE ENGINEERING GROUP
ENGINEERING I NATURAL RESOURCES I SURVEYING

WISCONSIN OFFICE:
15850 W. BLUEMOUND ROAD
BROOKFIELD, WI 53005
(262) 754-8888
CHICAGO I MILWAUKEE : NATIONWIDE

DRAFTED: DC DESIGNED: AS REVIEWED: MC

C□□□TR□CTI□□ D□TAIL□
MA□□TIC □AD□□R L□□I□TIC□ C□□T□R
CTH "H" □ILLA□□ □□ PL□A□A□T PRAIRI□, □I

MAC | MAC | MAC | MAC

This Document, Either as Drawing or the Assemblage of Electronic Data, is the Property of Commerce Construction Co., L.P. ("Commerce")

DRA□ □ □□ | DAT□
P□□,LLC

C□□□

ADA □I□□

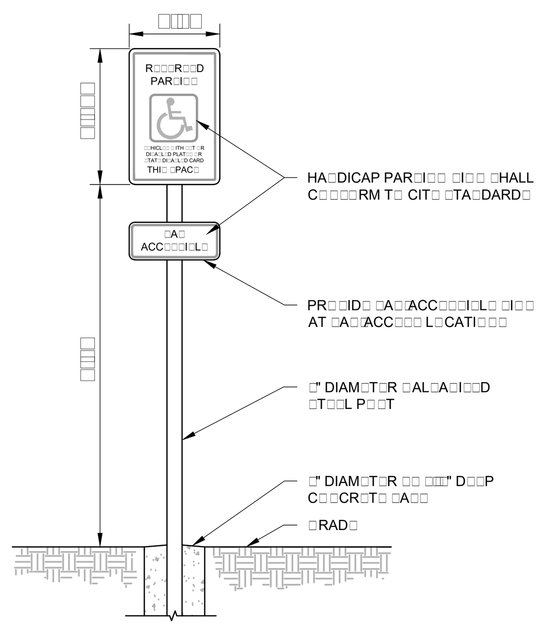

ADA □I□□

H□DRA□T □□LLARD

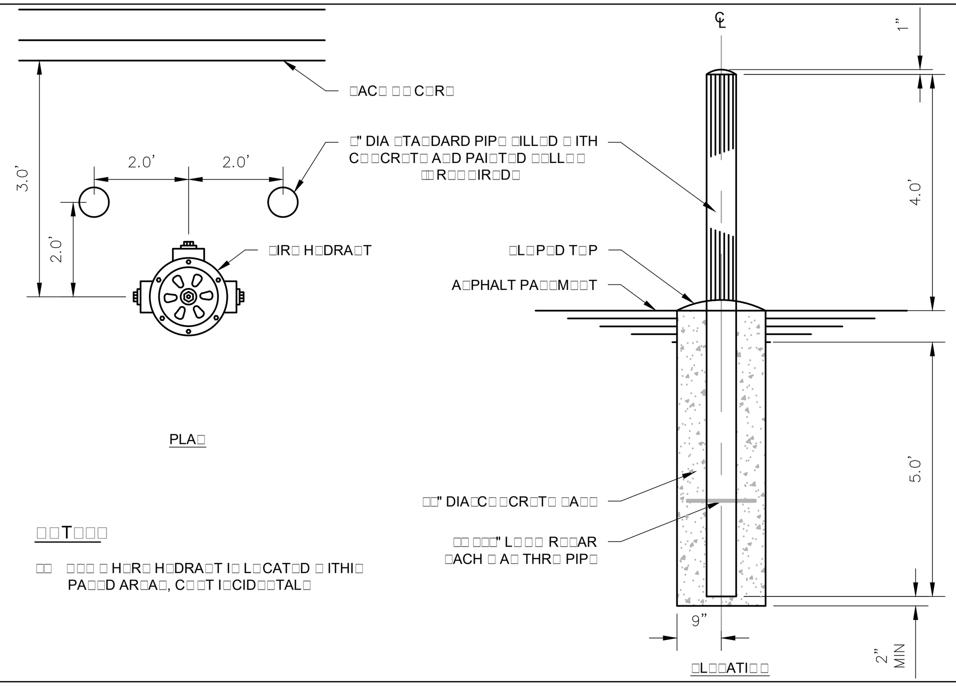

□□T□□□

□□ □□□ □ H□R□ H□DRA□T I□ L□CAT□D □ITHI□ PA□□D AR□A□, C□□T I□CID□□TAL□

H□DRA□T □□LLARD

□□" □□RTICAL □AC□ C□R□

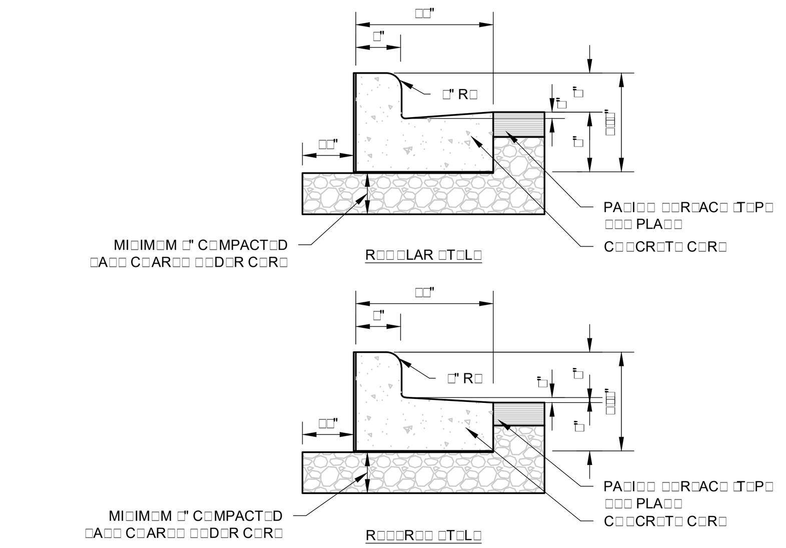

□□T□□□

□□ LAT□RAL C□□TRACTI□□ □□I□T□ □HALL □□ PLAC□D AT I□T□R□AL□ □□ □□T M□R□ THA□ □□ □□□T □□R L□□□ THA□ □ □□□T□TH□ □□I□T□ □HALL □□ A MI□IM□M □□ □I□CH□□ I□ D□PTH□

□□ □□PA□□I□□ □□I□T□ □HALL □□ PLAC□D TRA□□□□R□□L□ AT RADI□□ P□I□T□ □□ C□R□□□ □□ RADI□□ □□□ □□□T □R L□□□, A□D AT A□□L□ P□I□T□, □R A□ DIR□CT□D □□ TH□ □□□I□□□R □□ R□C□RD□TH□ □□PA□□I□□ □□I□T□ □ILL□R □HALL □□ A □□□ PI□C□ □I□□R□□ARD □R TH□ APPR□□□D □□□I□AL□□T MAT□RIAL HA□I□□ TH□ □AM□ DIM□□□I□□□ A□ C□R□ □ □□TT□R AT THAT □TATI□□ A□D □□ □□□I□CH THIC□□

□□ I□ ALL CA□□□, C□□CR□T□ C□R□ □ □□TT□R □HALL □□ PLAC□D □□ TH□R□□□HL□ C□MPACT□D CR□□H□D □T□□□□

□□ R□□□R□□ □T□L□ C□R□ L□CATI□□□ AR□ □□T□D □□ TH□ PLA□□□

□□" □□RTICAL □AC□ C□R□

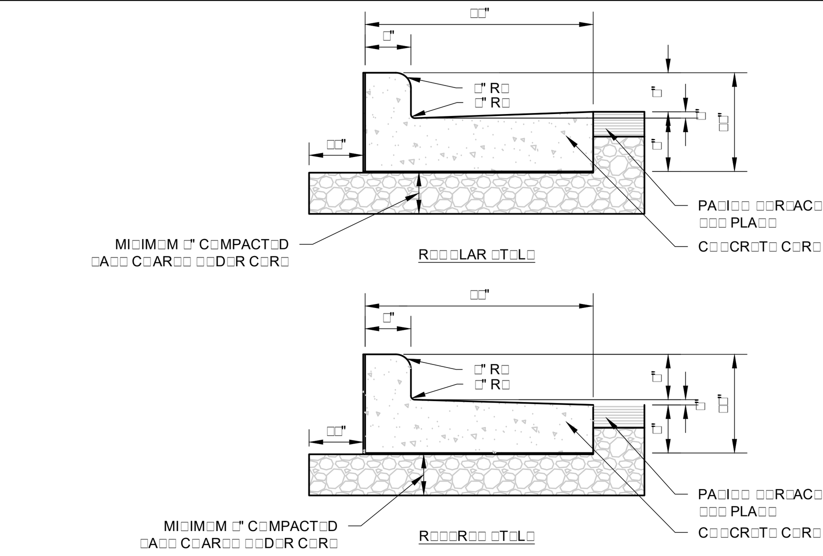

□□T□□□

□□ LAT□RAL C□□TRACTI□□ □□I□T□ □HALL □□ PLAC□D AT I□T□R□AL□ □□ □□T M□R□ THA□ □□ □□□T □□R L□□□ THA□ □ □□□T□ TH□ □□I□T□ □HALL □□ A MI□IM□M □□ □I□CH□□ I□ D□PTH□

□□ □□PA□□I□□ □□I□T□ □HALL □□ PLAC□D TRA□□□□R□□L□ AT RADI□□ P□I□T□ □□ C□R□□□ □□ RADI□□ □□□ □□□T □R L□□□, A□D AT A□□L□ P□I□T□, □R A□ DIR□CT□D □□ TH□ □□□I□□□R □□ R□C□RD□TH□ □□PA□□I□□ □□I□T□ □ILL□R □HALL □□ A □□□ PI□C□ □I□□R□□ARD □R TH□ APPR□□□D □□□I□AL□□T MAT□RIAL HA□I□□ TH□ □AM□ DIM□□□I□□□ A□ C□R□ □ □□TT□R AT THAT □TATI□□ A□D □□ □□□I□CH THIC□□

□□ I□ ALL CA□□□, C□□CR□T□ C□R□ □ □□TT□R □HALL □□ PLAC□D □□ TH□R□□□HL□ C□MPACT□D CR□□H□D □T□□□□

□□ R□□□R□□ □T□L□ C□R□ L□CATI□□□ AR□ □□T□D □□ TH□ PLA□□□

□□" □□RTICAL □AC□ C□R□

□□" D□PR□□□□D C□R□

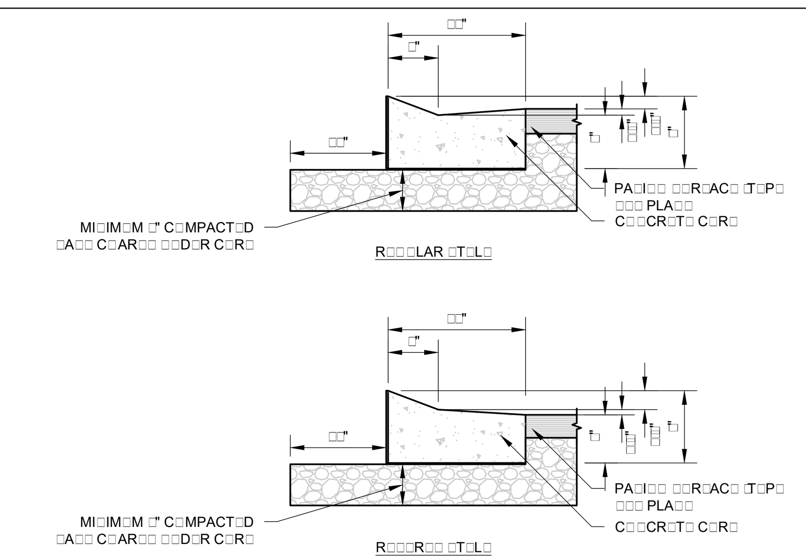

□□T□□□

□□ LAT□RAL C□□TRACTI□□ □□I□T□ □HALL □□ PLAC□D AT I□T□R□AL□ □□ □□T M□R□ THA□ □□ □□□T □□R L□□□ THA□ □ □□□T□TH□ □□I□T□ □HALL □□ A MI□IM□M □□ □I□CH□□ I□ D□PTH□

□□ □□PA□□I□□ □□I□T□ □HALL □□ PLAC□D TRA□□□□R□□L□ AT RADI□□ P□I□T□ □□ C□R□□□ □□ RADI□□ □□□ □□□T □R L□□□, A□D AT A□□L□ P□I□T□, □R A□ DIR□CT□D □□ TH□ □□□I□□□R □□ R□C□RD□TH□ □□PA□□I□□ □□I□T□ □ILL□R □HALL □□ A □□□ PI□C□ □I□□R□□ARD □R TH□ APPR□□□D □□□I□AL□□T MAT□RIAL HA□I□□ TH□ □AM□ DIM□□□I□□□ A□ C□R□ □ □□TT□R AT THAT □TATI□□ A□D □□ □□□I□CH THIC□□

□□ I□ ALL CA□□□, C□□CR□T□ C□R□ □ □□TT□R □HALL □□ PLAC□D □□ TH□R□□□HL□ C□MPACT□D CR□□H□D □T□□□□

□□ R□□□R□□ □T□L□ C□R□ L□CATI□□□ AR□ □□T□D □□ TH□ PLA□□□

□□" D□PR□□□□D C□R□

C□□CR□T□ □L□M□

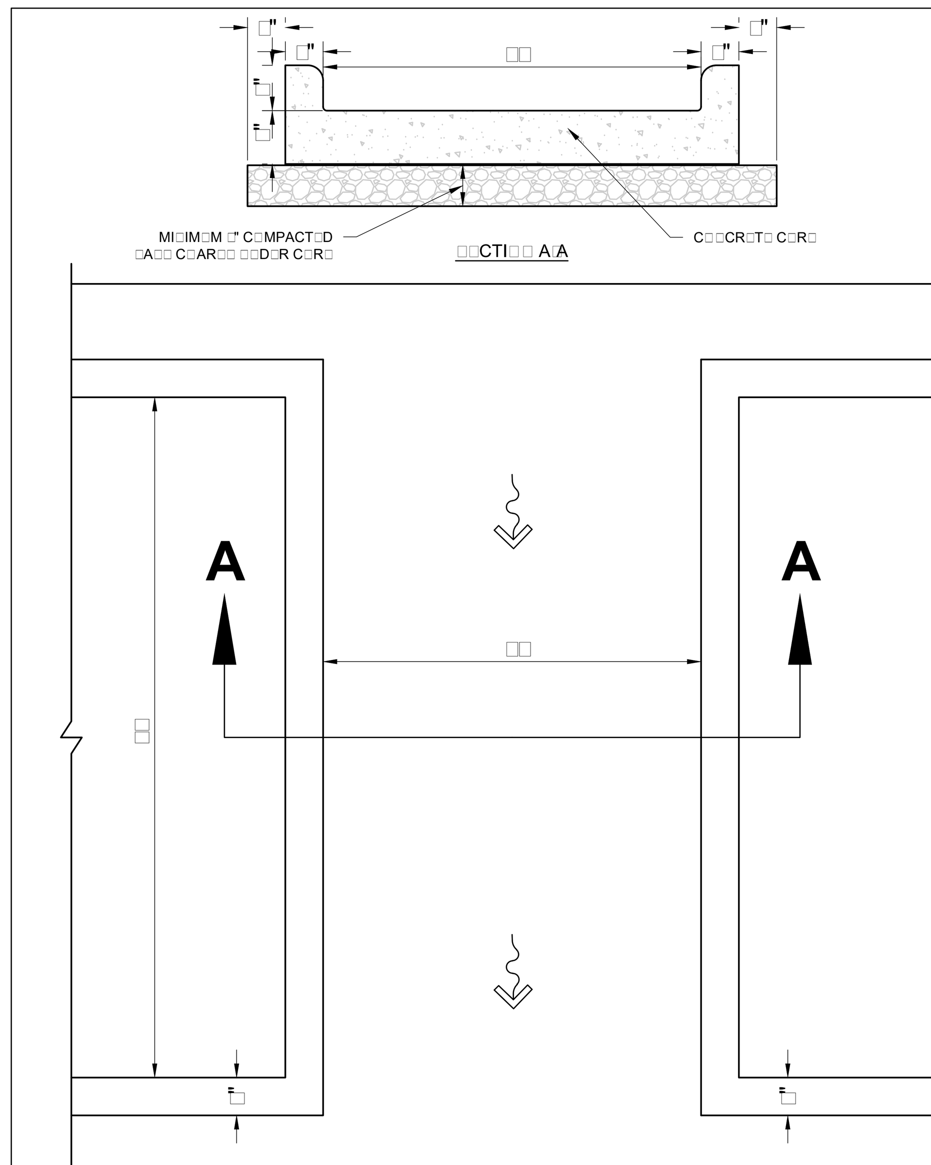

C□□CR□T□ □L□M□

PALMER-BOWLUS FLUME DETAIL (1 OF 2)

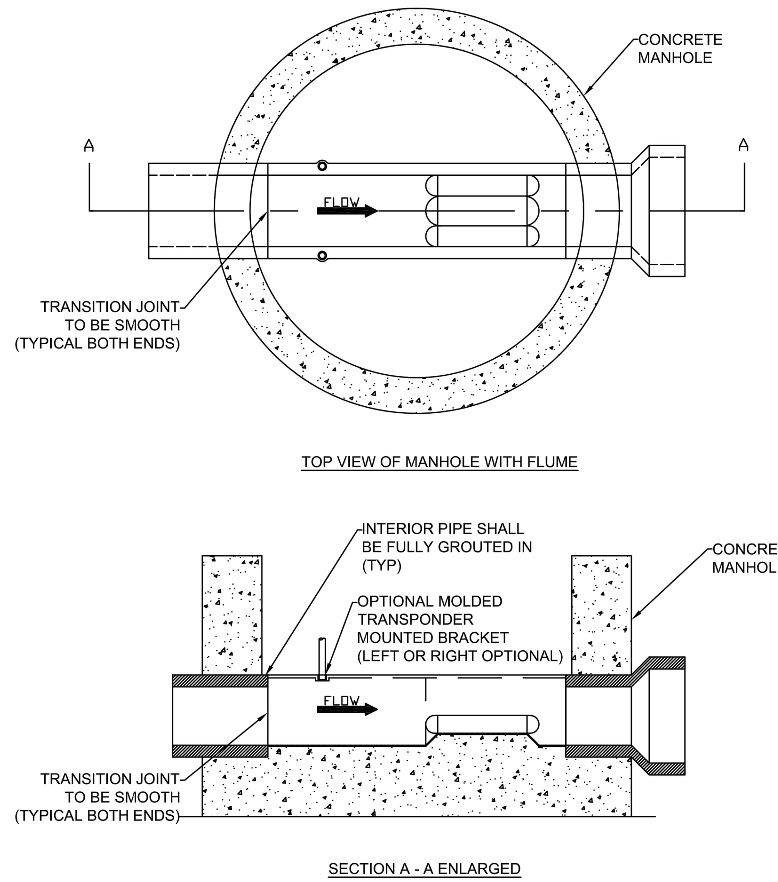

NOTE:

1. FLUME SHALL BE SET LEVEL INSIDE THE MANHOLE FOR PROPER TESTING PROCEDURES.
2. REFER TO VILLAGE STANDARD SPECIFICATIONS FOR SANITARY SEWER.

SCALE: NTS

VILLAGE OF PLEASANT PRAIRIE	PALMER-BOWLUS FLUME DETAIL (1 OF 2)	DETAIL: SAN - 2A
	CREATED: 11–21–12	APPROVED BY: MATT FINEOUR
	REVISED: 11–18–15	

PALMER-BOWLUS FLUME DETAIL (2 OF 2)

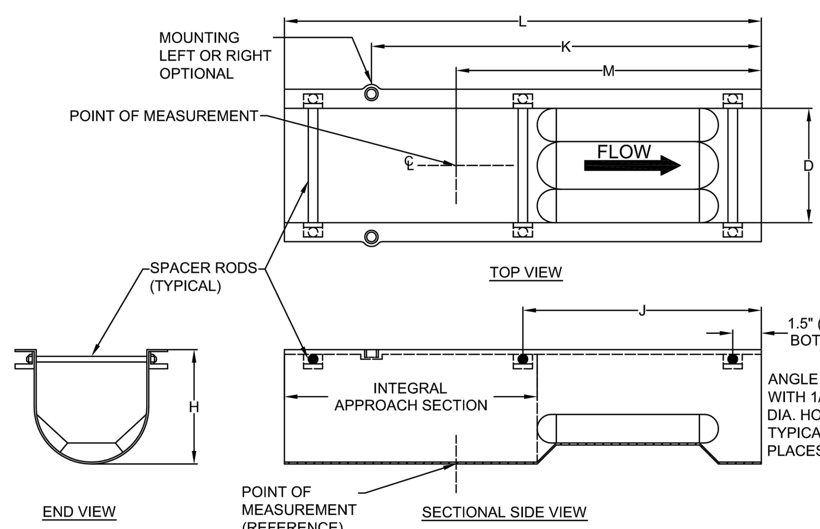

DIMENSIONS TABLE

PIPE SIZE	D	H	M	K	J	L
4	4	6	11	15 7/16	6 1/2	17
6	6	8	16	20 7/16	12 1/2	25
8	8	10	21	25 7/16	16 1/2	33
10	10	12	26	30 7/16	20 1/2	41
12	12	14	31	35 7/16	24 1/2	49
15	15	17	38 1/2	42 15/16	30 1/2	61
18	18	20	46	50 7/16	36 1/2	73
21	21	23	53 1/2	57 15/16	42 1/2	85
24	24	26	61	65 7/16	48 1/2	97
27	27	29	68 1/2	72 15/16	54 1/2	109
30	30	32	76	80 7/16	60 1/2	121

NOTES:

1. DIMENSIONS ARE IN INCHES, UNLESS OTHERWISE SPECIFIED.
2. DIMENSIONS PROVIDED FOR REFERENCE ONLY.

SCALE: NTS

VILLAGE OF PLEASANT PRAIRIE	PALMER-BOWLUS FLUME DETAIL (2 OF 2)	DETAIL: SAN - 2B
	CREATED: 11–21–12	APPROVED BY: MATT FINEOUR
	REVISED: 11–16–15	

STANDARD SANITARY MANHOLE

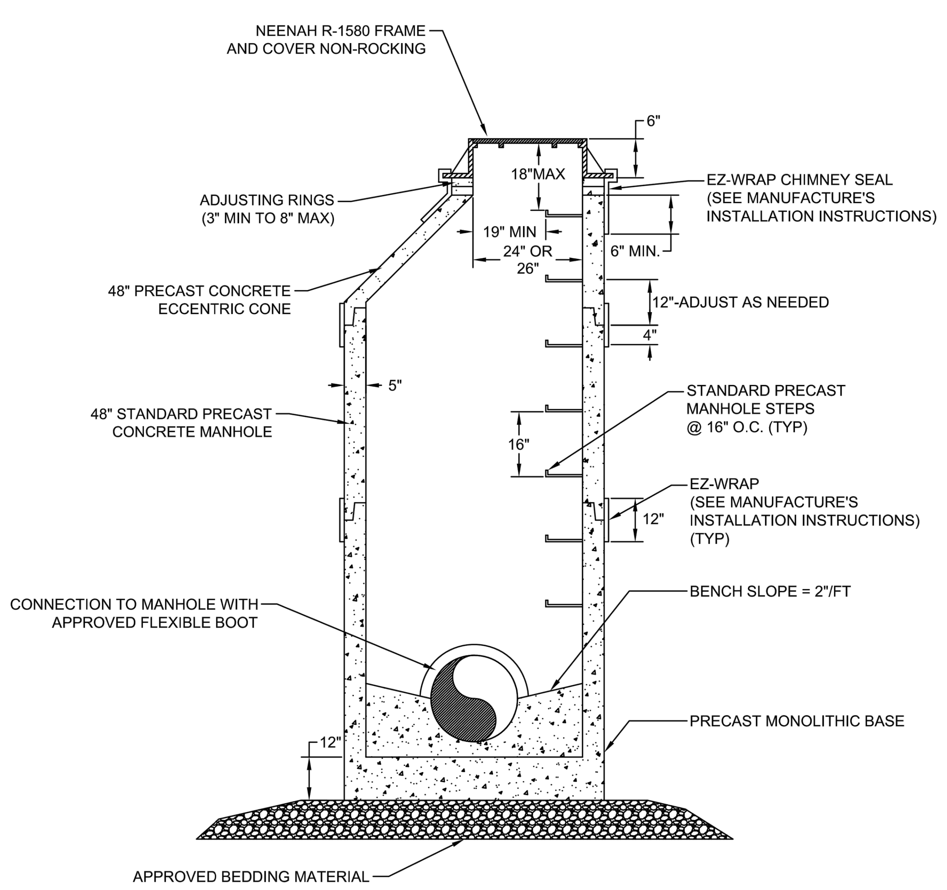

NOTE: REFER TO VILLAGE STANDARD SPECIFICATIONS FOR SANITARY SEWER.

SCALE: NTS

VILLAGE OF PLEASANT PRAIRIE	STANDARD SANITARY MANHOLE	DETAIL: SAN - 1
	CREATED: 11–21–12	APPROVED BY: MATT FINEOUR
	REVISED: 11–10–15	

DRAFTED: DC DESIGNED: AS REVIEWED: MC

STANDARD SAMPLING MANHOLE

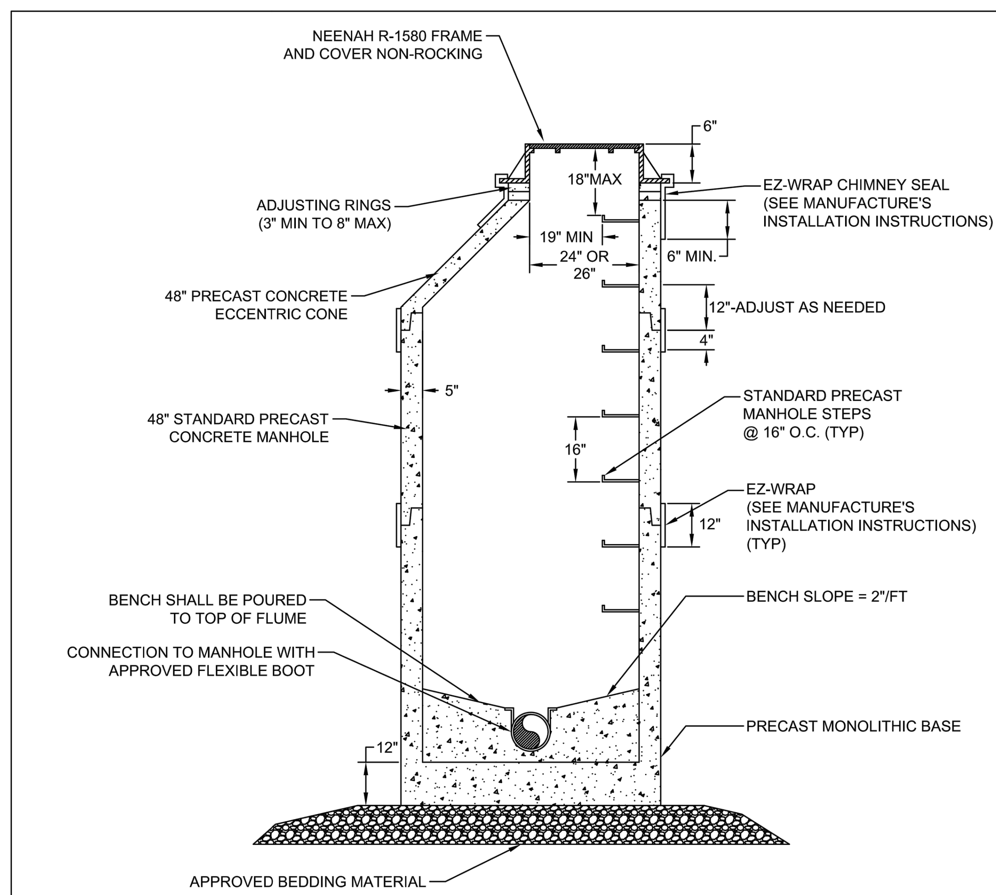

NOTES:

1. STANDARD SAMPLING MANHOLE SHALL HAVE A PALMER-BOWLUS FLUME WITH INTEGRAL APPROACH INSTALLED.
2. VILLAGE OF PLEASANT PRAIRIE DPW SHALL BE CONTACTED FOR FINAL INSPECTION OF SAMPLING MANHOLES.
3. SEE DETAIL SAN-2A AND SAN-2B FOR PALMER-BOWLUS FLUME DETAILS.
4. REFER TO VILLAGE STANDARD SPECIFICATIONS FOR SANITARY MANHOLES.

SCALE: NTS

VILLAGE OF PLEASANT PRAIRIE	STANDARD SAMPLING MANHOLE	DETAIL: SAN - 2
	CREATED: 11–21–12	APPROVED BY: MATT FINEOUR
	REVISED: 11–10–15	

PUMPER PAD FDC DETAIL

NOTE:
-SYSTEM SIZING SHALL BE COMPLETED BY A FIRE SUPPRESSION ENGINEER AND APPROVED OF BY THE VILLAGE OF PLEASANT PRAIRIE FIRE DEPARTMENT.
-SYSTEM INSTALLATION MUST BE CONSTRUCTED UNDER THE ONSITE SUPERVISION OF A LICENSED SPRINKLER FITTER.

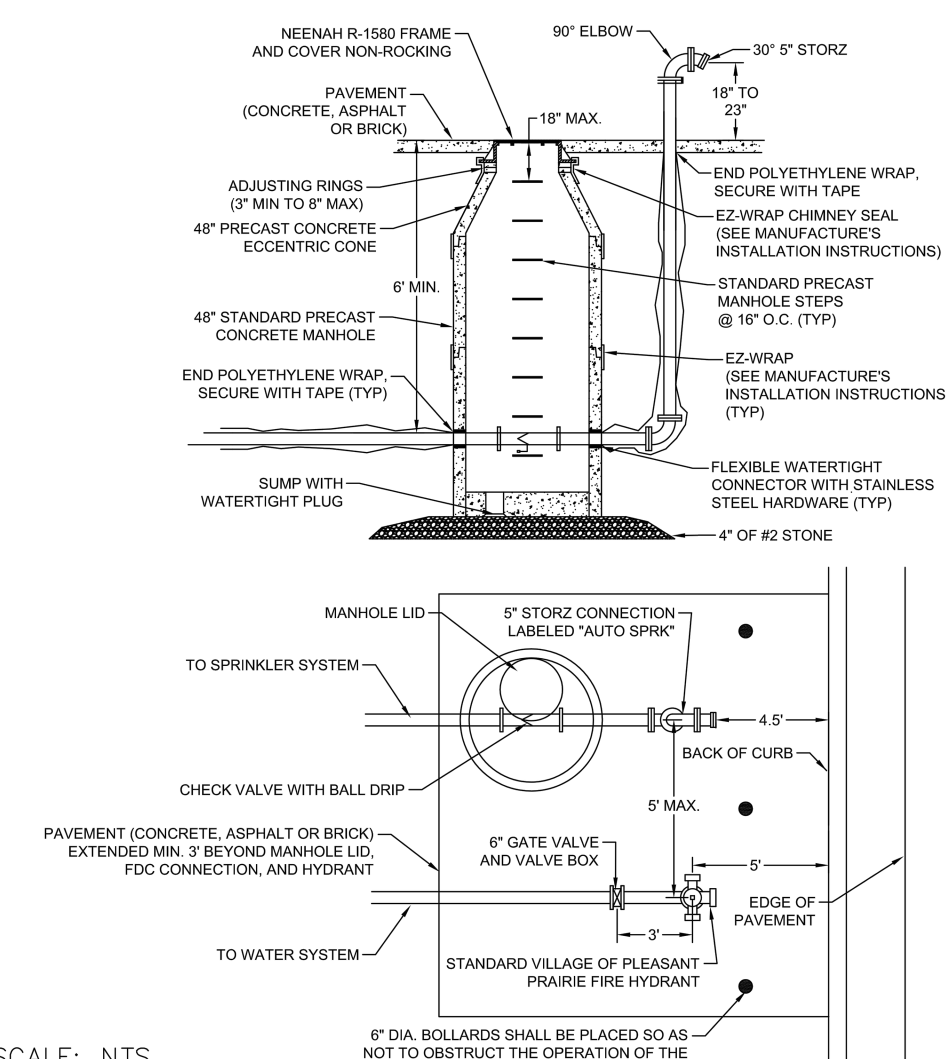

SCALE: NTS

VILLAGE OF PLEASANT PRAIRIE	PUMPER PAD FDC DETAIL	DETAIL: FD - 1
	CREATED: 4–16–13	APPROVED BY: D. McELMURY
	REVISED: 3–2–16	

STANDARD HYDRANT ASSEMBLY

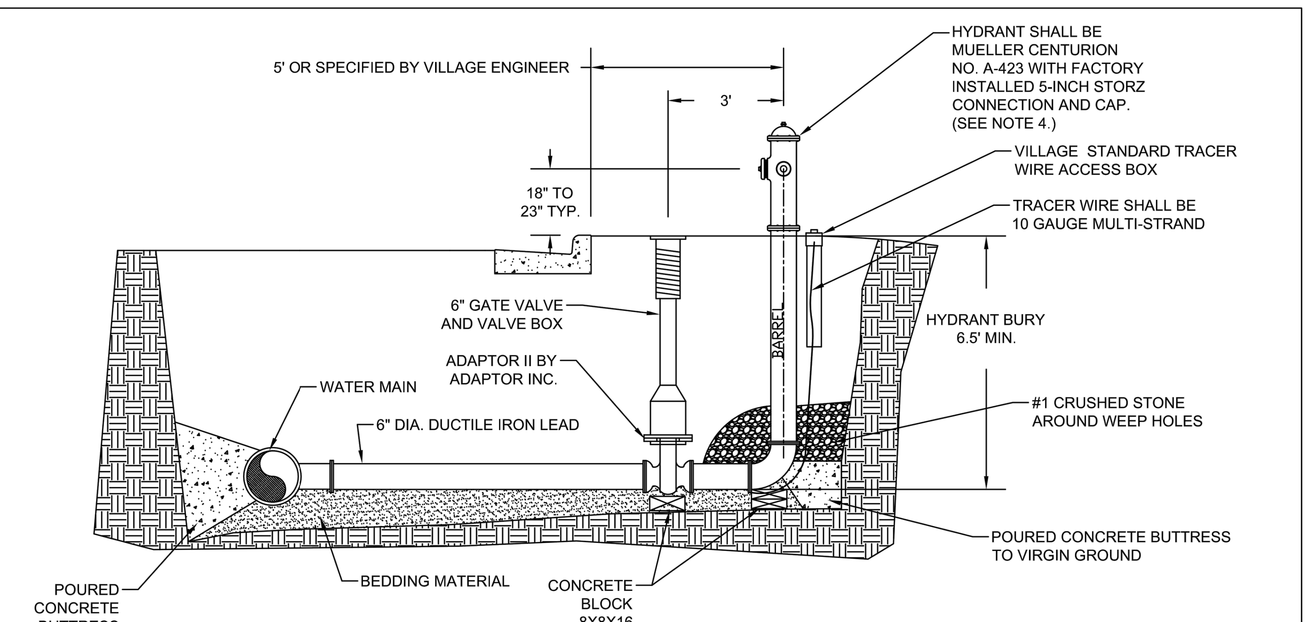

NOTES:

1. MECHANICAL JOINTS FROM TEE TO VALVE AND FROM VALVE TO HYDRANT SHALL BE RESTRAINED WITH MEGALUGS AND STAINLESS STEEL BOLTS.
2. ALL BOLTS SHALL BE STAINLESS STEEL BOLTS.
3. REFER TO VILLAGE STANDARD SPECIFICATIONS FOR WATER MAIN CONSTRUCTION
4. HYDRANT SPECIFICATIONS - 2 EACH 2-1/2 INCH NST NOZZLE, 1 FACTORY INSTALLED 5-INCH STORZ CONNECTION AND CAP MANUFACTURED BY MUELLER.
5. PAINT SPECIFICATION - PLEASE REFER TO VS-0400 OF THE VILLAGE CONSTRUCTION SPECIFICATIONS.
6. HYDRANT EXTENSIONS ARE NOT PERMITTED.

SCALE: NTS

VILLAGE OF PLEASANT PRAIRIE	STANDARD HYDRANT ASSEMBLY	DETAIL: W - 1
	CREATED: 11–26–12	APPROVED BY: MATT FINEOUR
	REVISED: 11–16–15	

PLAN I DESIGN I DELIVER
www.pinnacle-engr.com

PINNACLE ENGINEERING GROUP
ENGINEERING I NATURAL RESOURCES I SURVEYING

WISCONSIN OFFICE:
15850 W. BLUEMOUND ROAD
BROOKFIELD, WI 53005
(262) 754-8888
CHICAGO I MILWAUKEE : NATIONWIDE

P□□ □□□ □□□□□□□□A

This Document, Either as Drawing or the Assemblage of Electronic Data, is the Property of Commerce Construction Co., L.P. ("Commerce"). This document, including all electronic data attached therein, may not be reproduced, distributed, modified, used or implemented in any way, in whole or in part, without the written consent of Commerce. This document shall not be taken as a substitute for the original sealed document, and is without warranty of any kind either expressed or implied. Any person or organization using or relying on this document is responsible for its accuracy and completeness. Commerce is not responsible for edited or reproduced versions of digital data of this document. The acceptance or use of this document will be construed as an acceptance of the terms.

R□□I□I□□	□□	DAT□	
R□□I□I□□			
□ID □□T	MAC	□□□□□□□□	
ADDR□□□ □ILLA□□ C□MM□□T□	MAC	□□□□□□□□	
ADDR□□□ □ILLA□□ C□MM□□T□	MAC	□□□□□□□□	
ADDR□□□ □ILLA□□ C□MM□□T□	MAC	□□□□□□□□	
R□□I□I□□	□□	DAT□	

C□MM□RC□ C□□□TR□CTI□□ C□,L.P□
□□□□ Cr□□r□ad□Par□a□□□rth
□i□th □l□□r
Cit□ □□Indu□tr□, Cali□□rnia □□□□□□□□□□
Tele□h□ne □□□□□□□□□□□□□
Licen□e □□□□□□□□

C□□□TR□CTI□□ D□TAIL□
□□□I□□□RI□□ IMPR□□□M□□T□ PLA□□ □□R
MA□□TIC □AD□□R L□□I□TIC□ C□□T□R
CTH "H" □ILLA□□ □□ PL□A□A□T PRAIRI□, □I

Dra□in□ Pl□t □ar
□" □"
□□e thi□ □l□t □ar t□ c□n□ir□ dra□in□ ha□ n□t □een reduced □r enlar□ed □r□□ □ri□inal□ I□ thi□ □l□t □ar i□ n□t e□actl□ □ inch l□n□ the □h□□ical □i□e □□dra□in□ ha□ chan□ed□

DRA□ □ □□ DAT□
P□□,LLC □□□□□□□□

CCC □□□ □□□
□□□□□□A

□H□□T □□□
C□□□

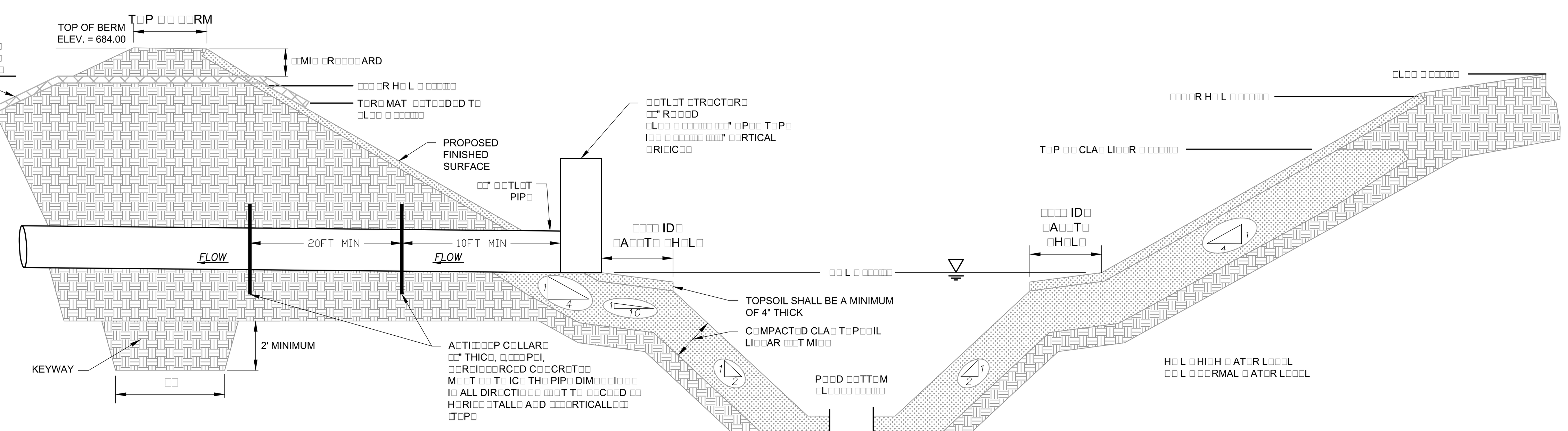

□□T□□□

1. ALL C□□□TR□CTI□□ □HALL M□□T TH□ □P□CI□ICATI□□□ □□ □ □DR □ □T D□T□□TI□□ □A□I□ T□CH□ICAL □TA□DARD□
2. ALL □ □R□ T□ □□ C□□D□CT□D I□ C□□□□RMA□C□ □ ITH TH□ □T□RM □ AT□R MA□A□□M□□T PLA□ □□R TH□ PR□□□CT □IT□ A□ APPR□□□D □□ TH□ R□□□LAT□R□ □□□I□□□R □□ R□C□RD□
3. HDP□ PIPI□□ □ I□□TALLATI□□ □ ITHI□ TH□ □A□I□ □HALL □□ I□ ACC□RDA□C□ □ ITH A□□TH□ M□□□ T□P□ "□" □ ITH □ AT□R TI□HT □□I□T□□
4. CLA□ LI□□AR □HALL □□ A MI□IM□M □□ □ □□□T THIC□□CLA□ □HALL □□ COMPACTED AT ±210% OPTIMAL MOISTURE CONTENT TO 90% M□DI□I□D PR□CT□R□
5. □□R C□□□TR□CT□D □M□A□□M□□T□ □ H□R□ TH□ P□RMA□□□T P□□L I□ P□□D□D □ □□□T □R M□R□ A□AI□□T TH□ □M□A□□M□□T□TH□R□ □HALL □□ A C□R□ TR□□CH □R □□□□ A□ AL□□□ TH□ C□□T□RLI□□ □□ TH□ □M□A□□M□□T □P T□ TH□ P□RMA□□□T P□□L □L□□ATI□□TH□ C□R□ TR□□CH □R □□□□ A□ □□ AL□ □HALL □□ A MI□IM□M □□ □ □□□T D□□P A□D □ □□□T □ ID□ □ ITH □ID□ □L□P□ □□ □□□ □R □LATT□R□
6. C□□TRACT□R □HALL P□□ITI□□ A□TI□□□□P C□LLAR □□CH THAT TH□ C□LLAR□ AR□ C□MPL□T□L□ C□□TAI□□D □ ITHI□ TH□ □M□A□□M□□T□
7. C□□TRACT□R □HALL □IT □TA□DPIP□□ □ ITH R□M□□A□L□ C□□□TR□CTI□□ □RI□IC□ PLAT□ □□□R TH□ P□RMA□□□T D□□ AT□RI□□ □RI□IC□□TH□ C□□□TR□CTI□□ □RI□IC□ □HALL R□MAI□ I□ PLAC□ □□TIL □□□ □□□□TATI□□ I□ □□TA□LI□H□D □□□R TH□ C□□TRI□□TI□□ AR□A □□ TH□ P□□D□
8. IMM□DIAT□L□ I□□TALL □ILT□R □A□RIC □□□R ALL □□TL□T□ T□ PR□□□□T □□DIM□□T D□P□□ITI□□ I□ TH□ PIPI□□□R□M□□□ □□LL□□ I□□ AR□A □TA□ILI□ATI□□□
9. T□R□ R□I□□□RC□M□□T MATTI□□ □HALL □□ I□□TALL□D I□ ACC□RDA□C□ □ ITH □ D□R T□CH □TA□DARD □□□□□

□ □T P□□D CR□□□ □□CTI□□

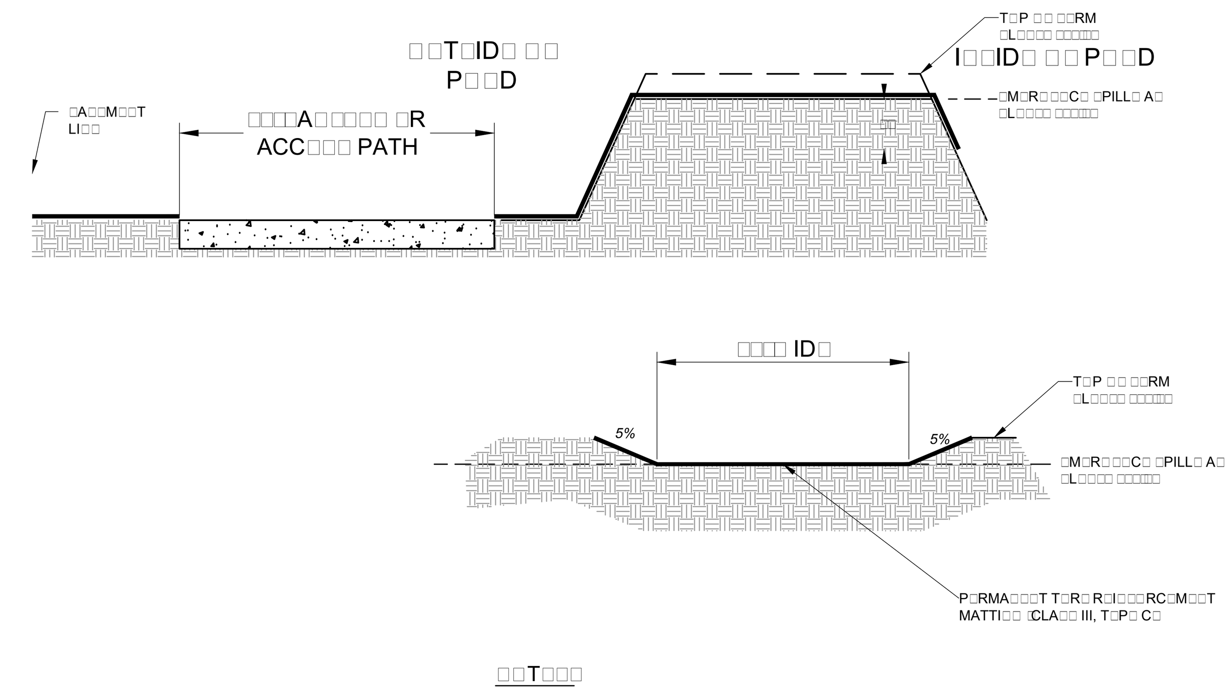

□□T□□□
1. □□T□□D MATTI□□ □□□□L□□ TH□ □L□□ATI□□ □□ TH□ □M□R□□□C□ □PILL□ A□ □□ TH□ I□□ID□ □□ TH□ P□□D□
2. □□T□□D MATTI□□ T□ T□□ □□ □L□P□ □□ TH□ □□T□ID□ □□ TH□ P□□D□
3. MATTI□□ □HALL □□ I□□TALL□D I□ ACC□RDA□C□ □ ITH □ D□R T□CH □TA□DARD □□□□□

□M□R□□□C□ □PILL□ A□ D□TAIL

NTS

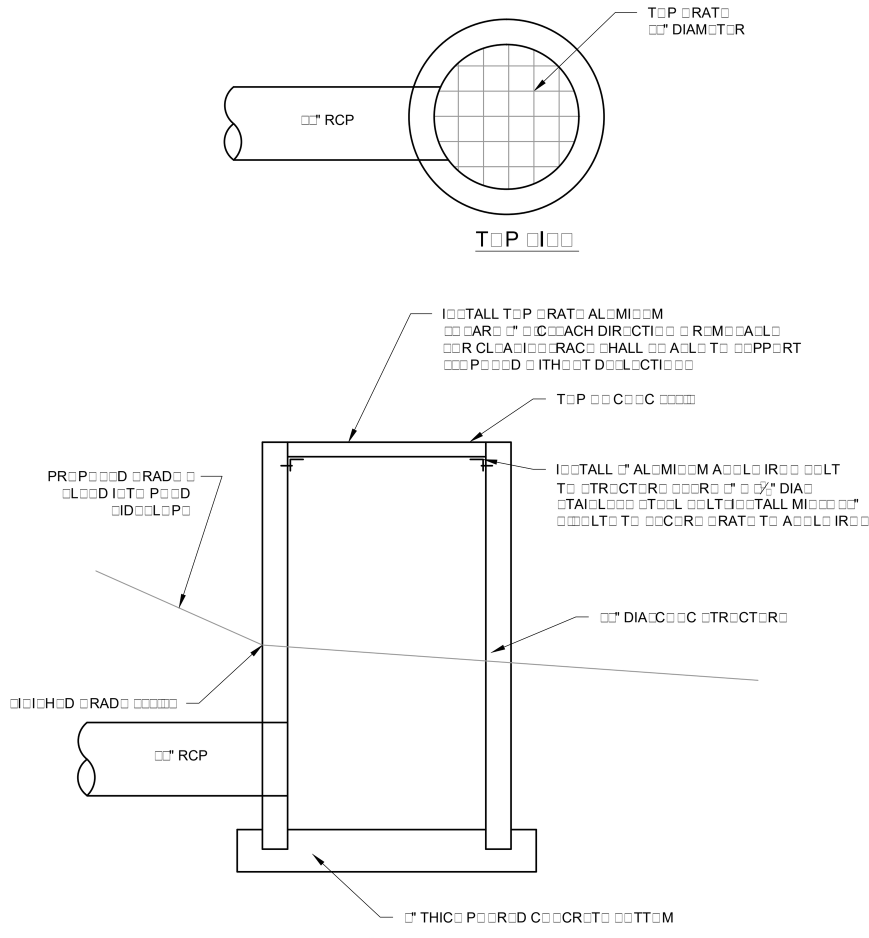

OUTLET STRUCTURE DETAIL

NTS

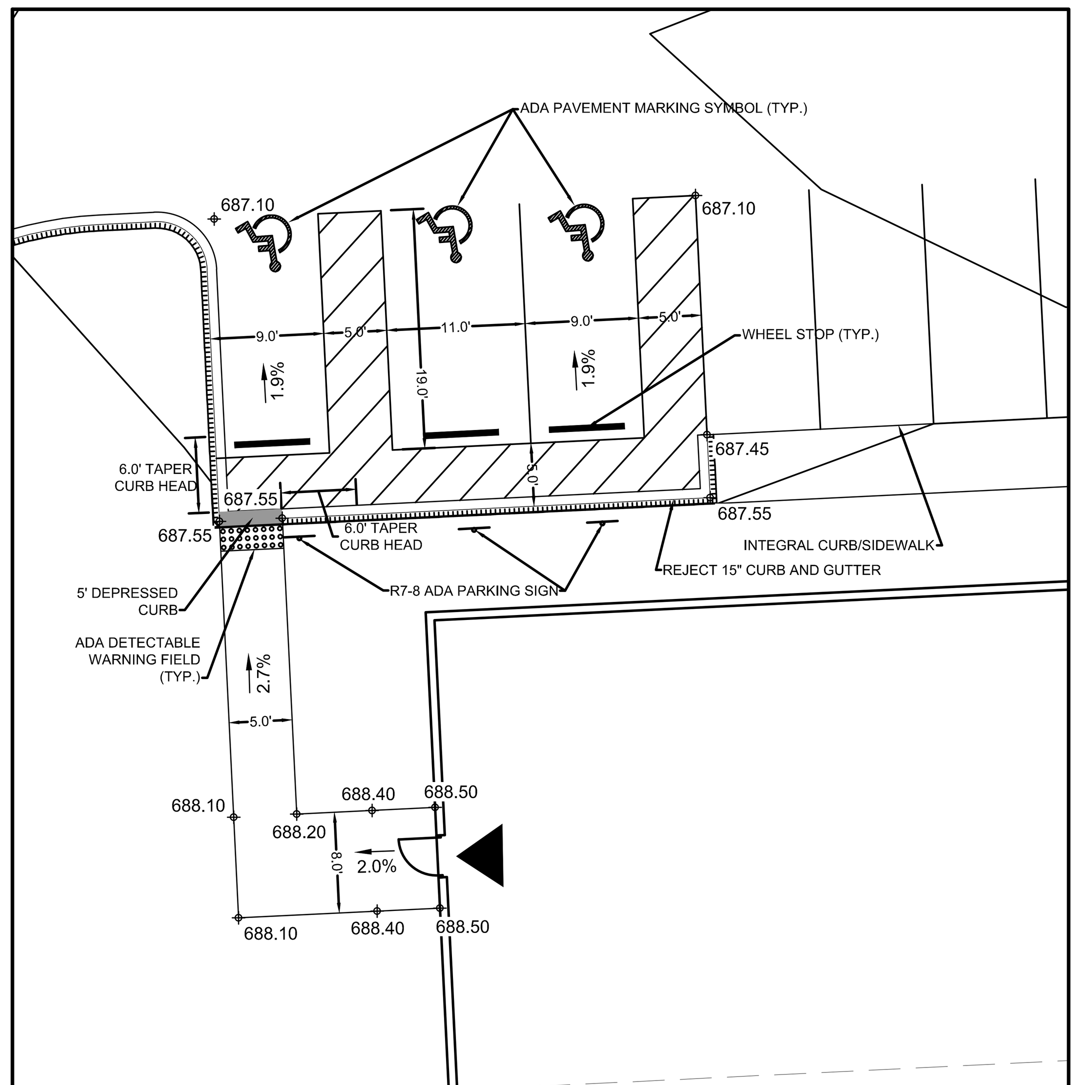

ENLARGED VIEW: SW ADA PARKING 1" = 10'

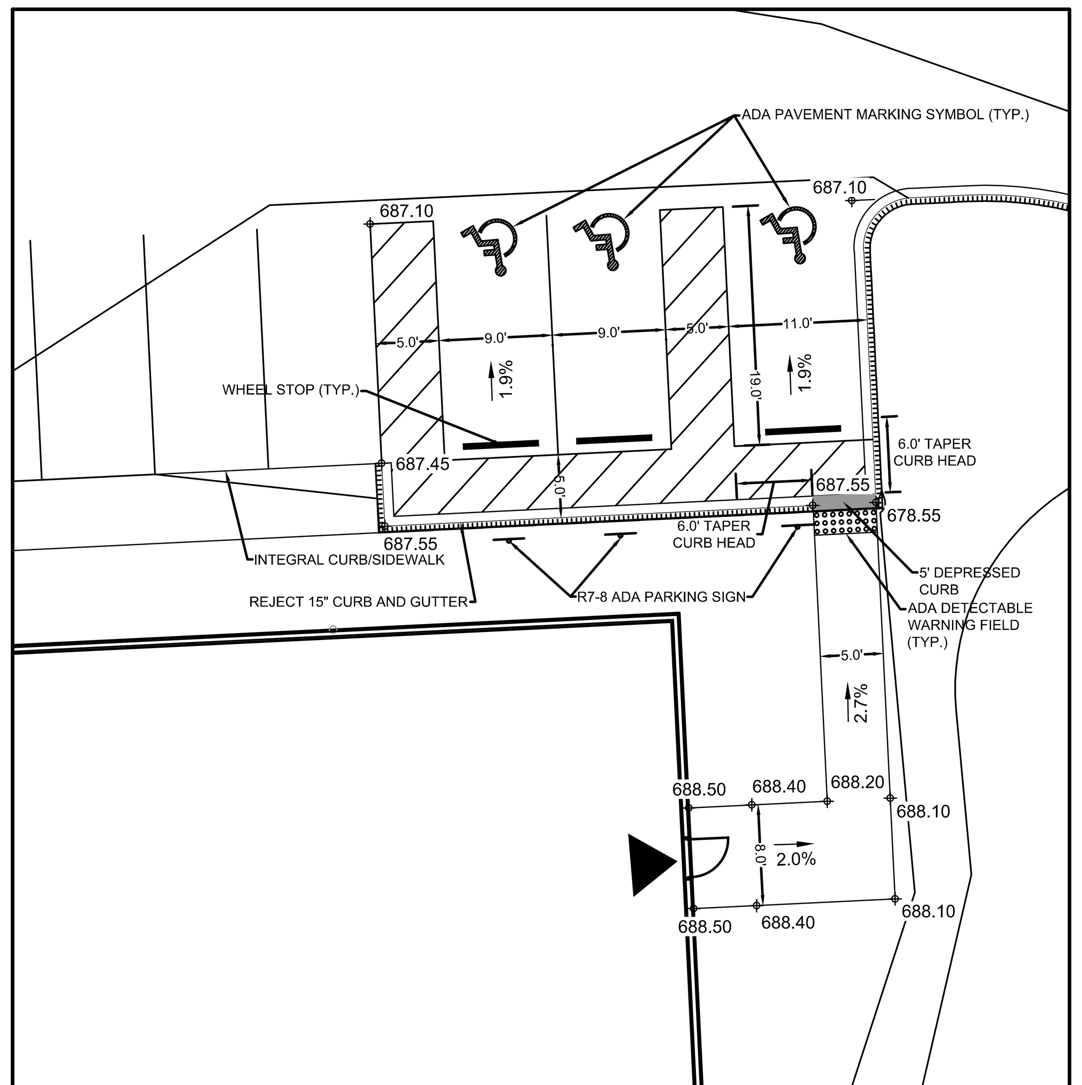

ENLARGED VIEW: NW ADA PARKING 1" = 10'

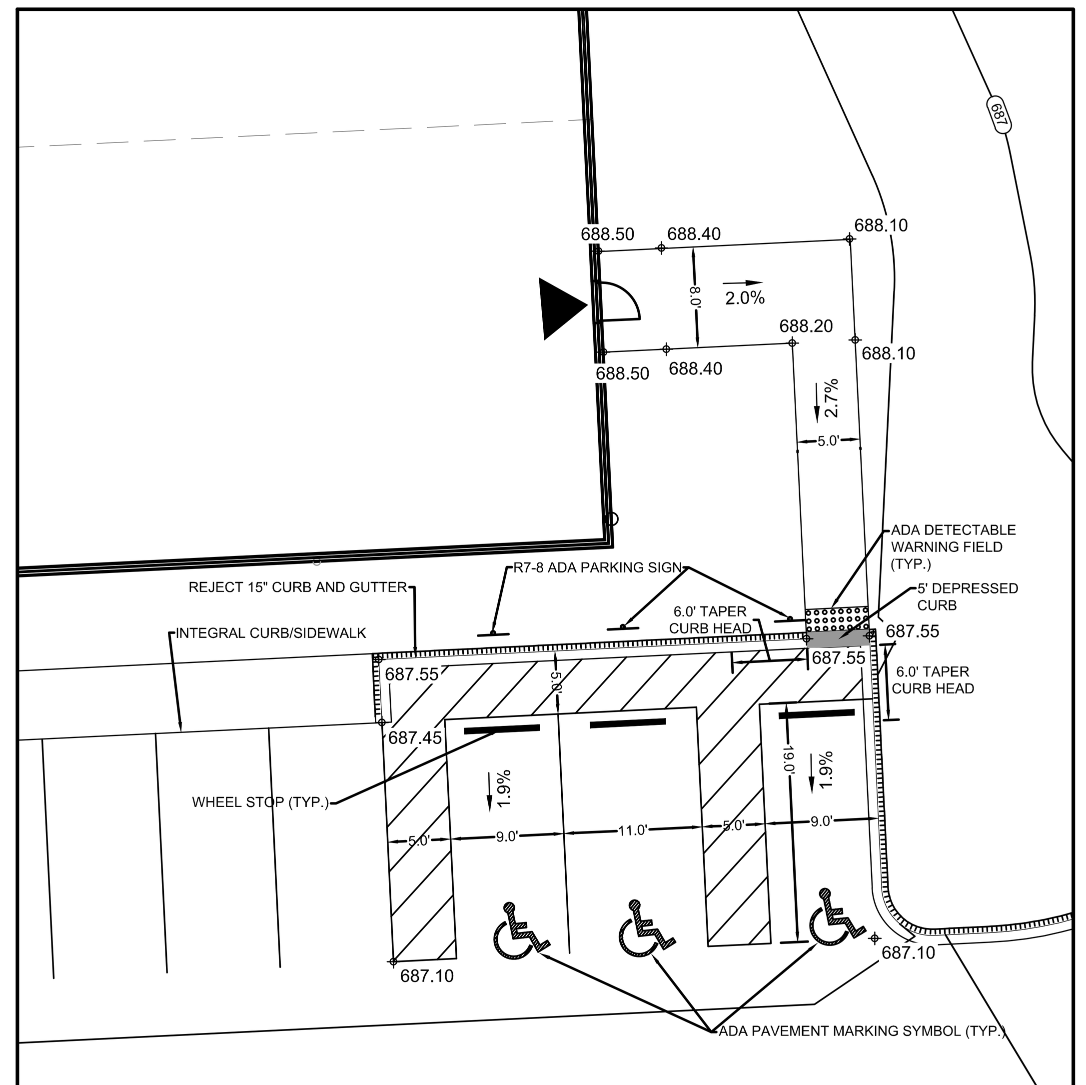

ENLARGED VIEW: NE ADA PARKING 1" = 10'

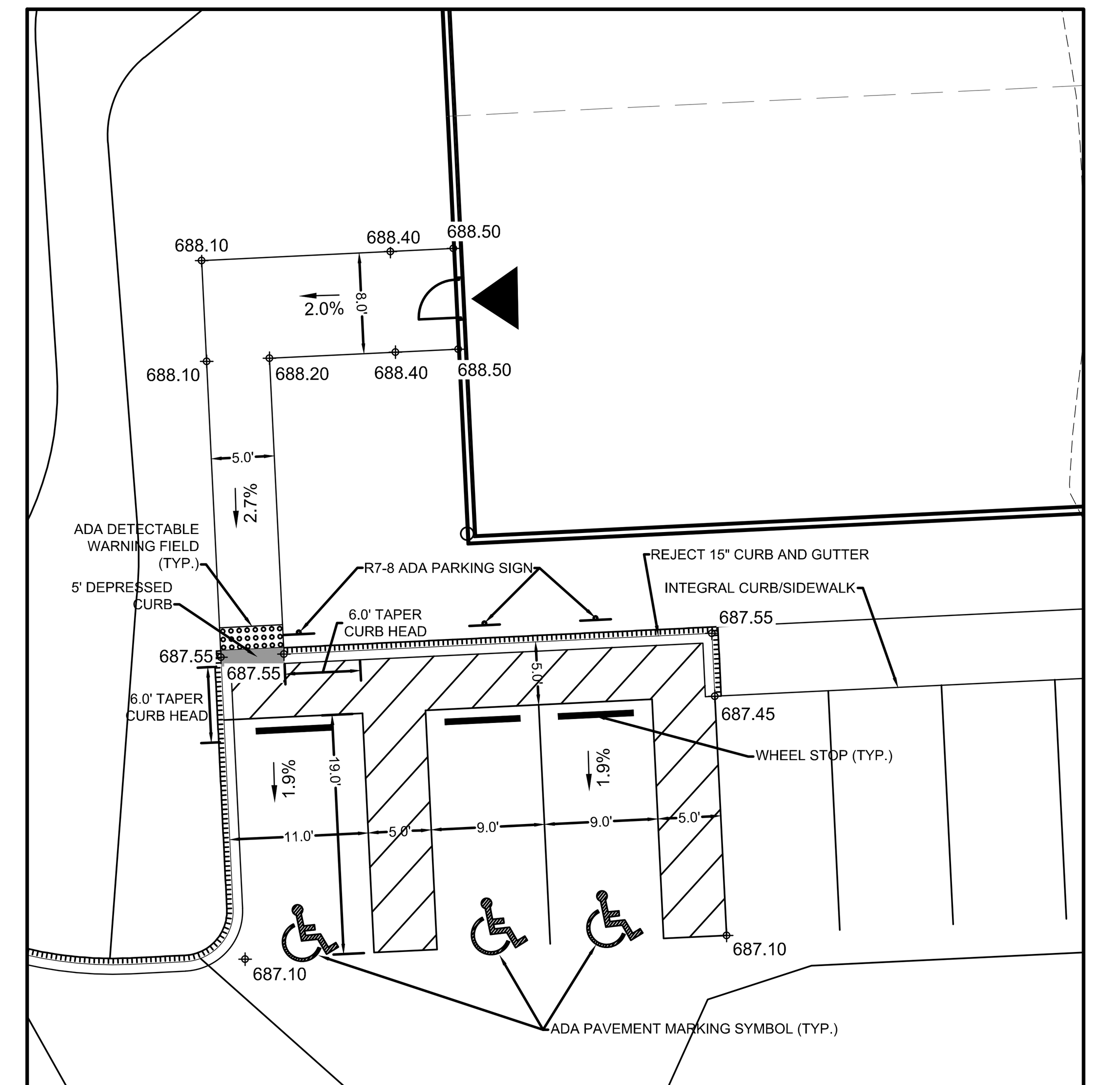

ENLARGED VIEW: SE ADA PARKING 1" = 10'

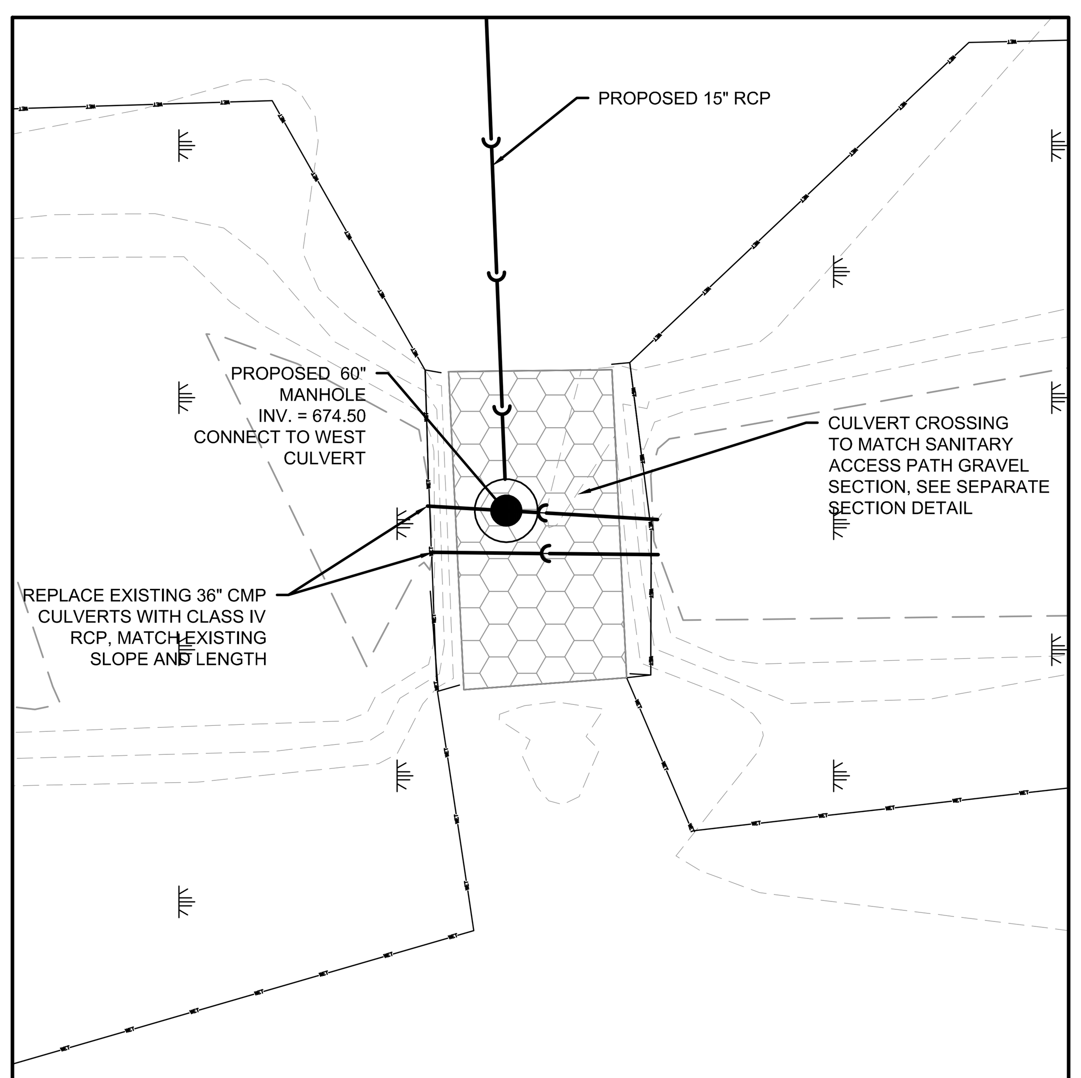

ENLARGED VIEW: POND OUTLET 1" = 10'

DRAFTED: DC
DESIGNED: AS
REVIEWED: MC

PLAN I DESIGN I DELIVER
www.pinnacle-engr.com

PINNACLE ENGINEERING GROUP
ENGINEERING I NATURAL RESOURCES I SURVEYING

WISCONSIN OFFICE:
15850 W. BLUEMOUND ROAD
BROOKFIELD, WI 53005
(262) 754-8888
CHICAGO I MILWAUKEE : NATIONWIDE

This Document, Either as Drawing or the Assemblage of Electronic Data, is the Property of Commerce Construction Co., L.P. ("Commerce"). This document, including all electronic data attached therein, may not be reproduced, distributed, utilized, or implemented in any way, in whole or in part, without the written consent of Commerce. This document shall not be taken as a substitute for the original sealed document, and is without warranty of any kind either expressed or implied. Commerce is not responsible for accuracy and completeness. The acceptance or use of this document will be construed as an acceptance of the terms.

R□□I□I□□	□□	DAT□	
ADDR□□□ □ILLA□□ C□MM□□T□	MAC		
ADDR□□□ □ILLA□□ C□MM□□T□	MAC		
ADDR□□□ □ILLA□□ C□MM□□T□	MAC		
□ID □□T	MAC		

C□MM□RC□ C□□□TR□CTI□□ C□,L.P.
Telephone
License

C□□□TR□CTI□□ D□TAIL□

□□□I□□□RI□□ IMPR□□□M□□T□ PLA□□ □□R
MA□□□TIC □AD□□R L□□I□TIC□ C□□T□R
CTH "H" □ILLA□□ □□ PL□A□A□T PRAIRI□, □I

DRA□ □ □□ DAT□
P□□,LLC

CCC □□□ □□□

□H□□T □□□
C□□□

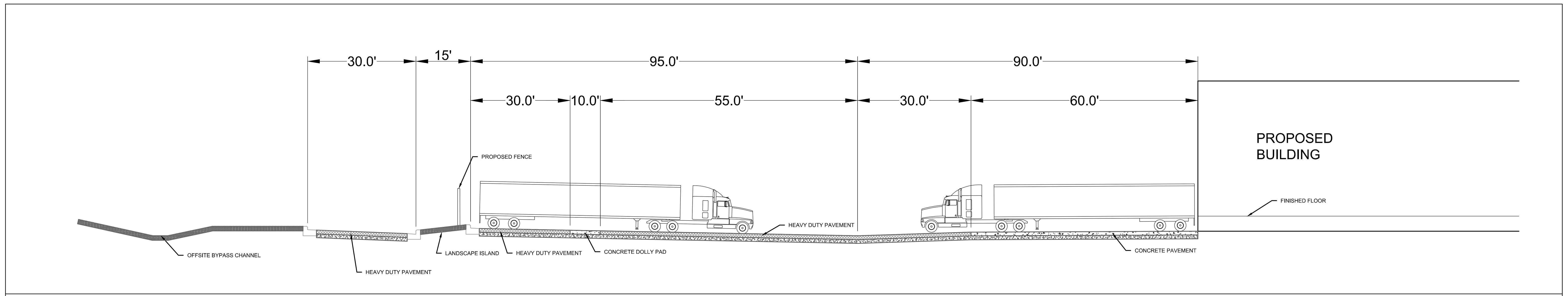

CROSS SECTION A-A

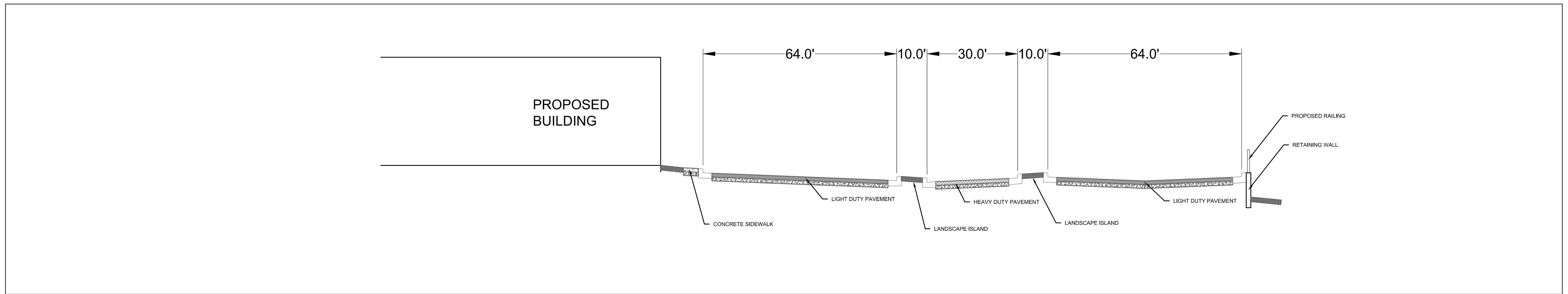

CROSS SECTION B-B

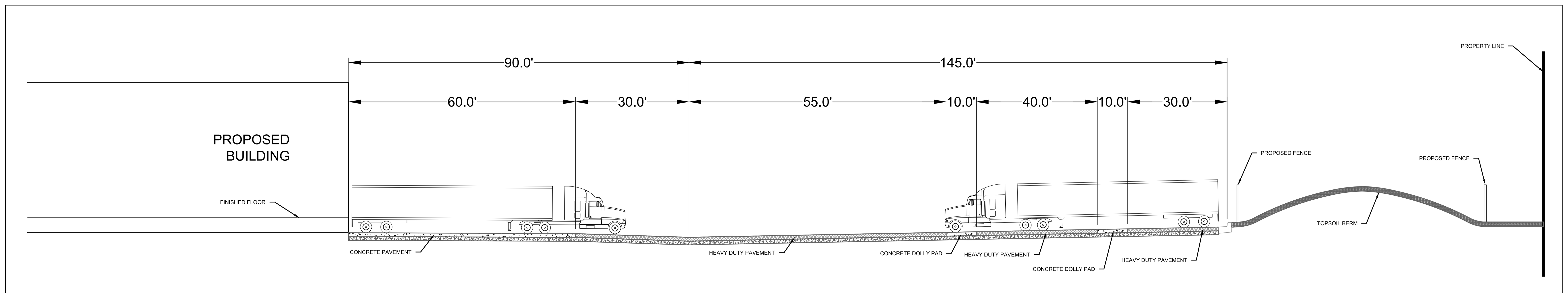

CROSS SECTION C-C

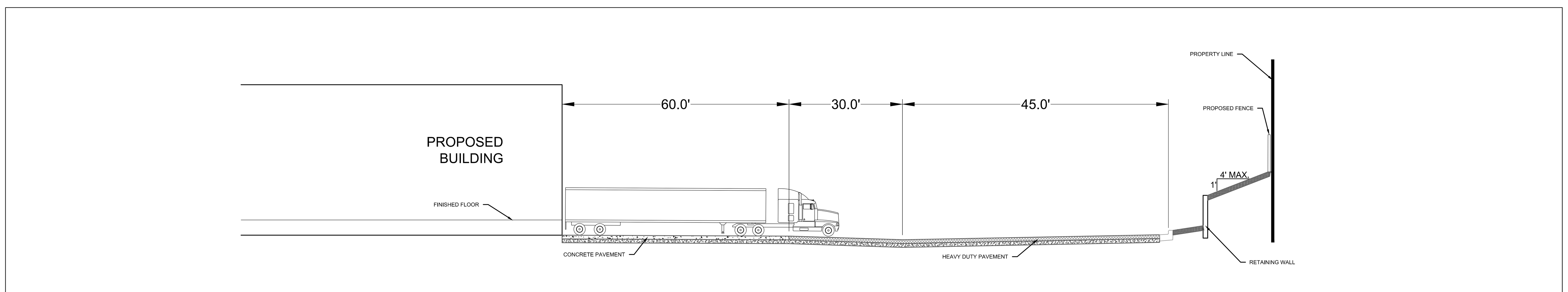

CROSS SECTION D-D

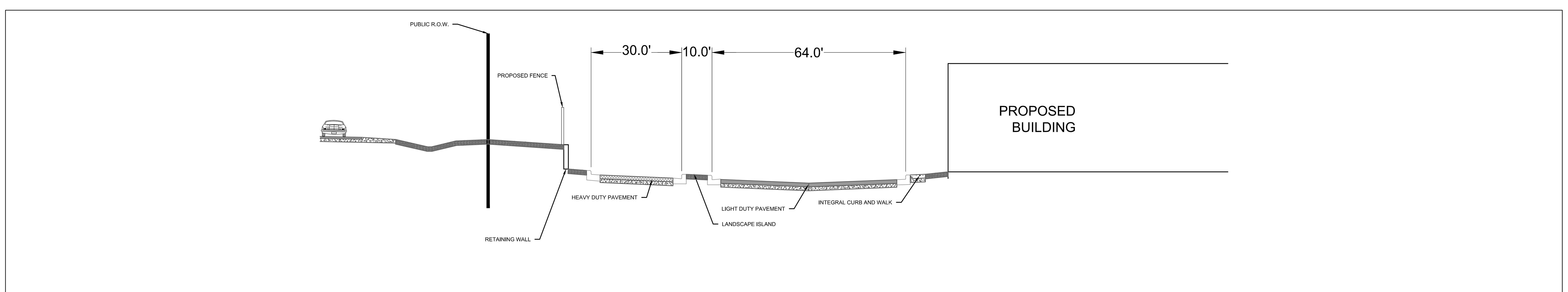

CROSS SECTION E-E

DRAFTED: DC DESIGNED: AS REVIEWED: MC

PLAN I DESIGN I DELIVER
www.pinnacle-engr.com

PINNACLE ENGINEERING GROUP
ENGINEERING I NATURAL RESOURCES I SURVEYING

WISCONSIN OFFICE:
15850 W. BLUEMOUND ROAD
BROOKFIELD, WI 53005
(262) 754-8888
CHICAGO I MILWAUKEE : NATIONWIDE

This Document, Either as Drawing or the Assemblage of Electronic Data, is the Property of Commerce Construction Co., L.P. ("Commerce")
without the written consent of Commerce. This document ... without warranty of any kind either expressed or implied. ... and completeness. Commerce is not responsible for ... document. The acceptance or use of this document will ...

MAC
MAC
MAC
MAC

ADDR
ADDR
ADDR

DATE
REVISIONS

CONSTRUCTION DETAILS

MA TIC AD R L I TIC C T R

CTH "H" ILLA PL A T PRAIRI

Drawing Plot Bar

DRA ,LLC DATE

CCC A

SHEET

C

14B42 sheet a: Midwest Guardrail System (MGS) Installation Cross Sections, Post and Block Details

GENERAL NOTES

① WOOD OR STEEL POSTS (w6X9 OR w6X8.5) MAY BE USED. DO NOT INTERMIX WOOD AND STEEL POSTS. INSTALL STEEL POSTS WITH HOLES ON APPROACHING TRAFFIC SIDE.

② USE WOOD OR APPROVED PLASTIC BLOCKOUTS. WOOD BLOCKOUTS MAY BE CONSTRUCTED OUT OF TWO OR MORE WOOD BLOCKOUTS. SEE ALTERNATE WOOD BLOCKOUT DETAIL. DIMENSIONS OF APPROVED PLASTIC BLOCKOUTS MAY VARY.

③ IF ROCK IS ENCOUNTERED DURING EXCAVATION, PROVIDE A HOLE 12 INCHES IN DIAMETER EXTENDING 20 INCHES DEEP INTO THE ROCK. PLACE APPROXIMATELY 2½ INCHES OF GRANULAR MATERIAL IN THE BOTTOM OF THE HOLE. CUT THE POSTS THE TO LENGTH AMD INSTALL. BACKFILL WITH EXCAVATED MATERIAL AND COMPACT. BACKFILL IS TO BE FREE OF LARGE ROCKS.

④ WHEN THE DISTANCE FROM BACK OF POST TO SHOULDER HINGE POINT IS LESS THAN 2 FEET INSTALL LONGER POST AT HALF POST SPACING (K).

⑤ FOR NEW MGS INSTALLATION TOP OF W-BEAM RAIL TOLERANCE IS ± 1". FOR EXISTING MGS INSTALLATION TOP OF W-BEAM IS BETWEEN 27¾" TO 32".

⑥ WHEN USING STEEL POST AND WOOD BLOCKOUTS INSTALL FOUR 16D GALVANIZED NAILS. INSTALL NAILS AT THE BACK CORNERS OF THE BLOCK AND BEND THE NAILS OVER THE FLANGE OF THE STEEL POST.

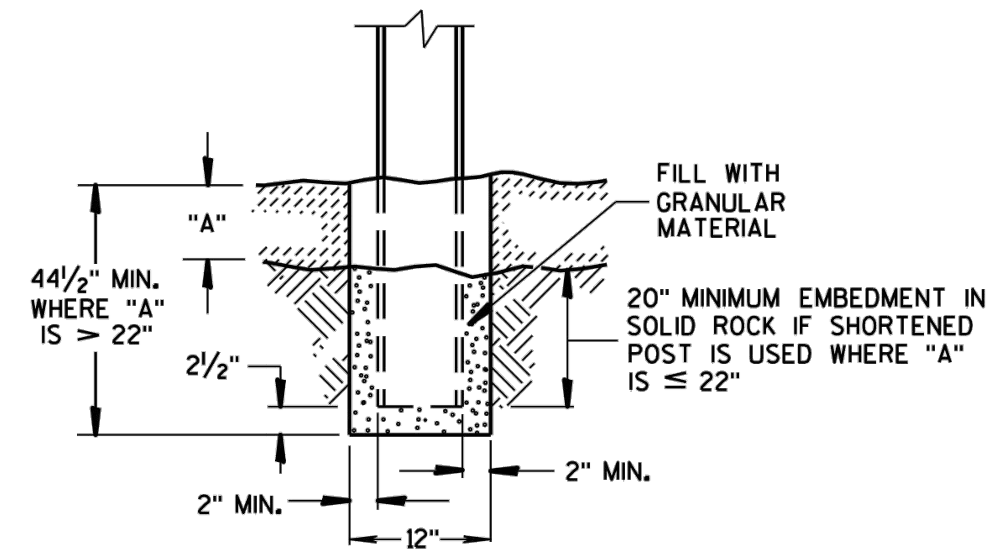

END VIEW
SETTING STEEL OR WOOD POST IN ROCK ③

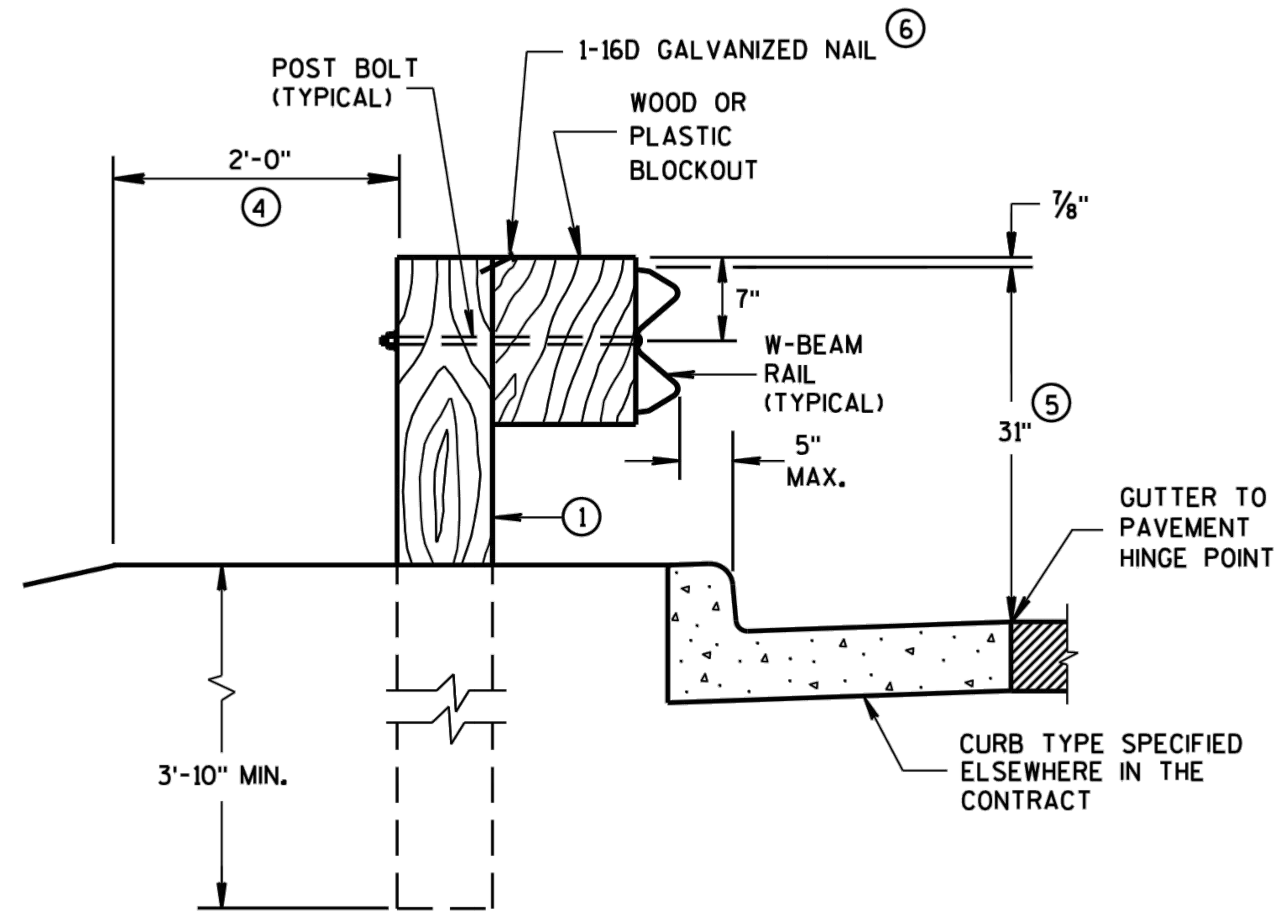

END VIEW
LOCATED ALONG A CURBED ROADWAY

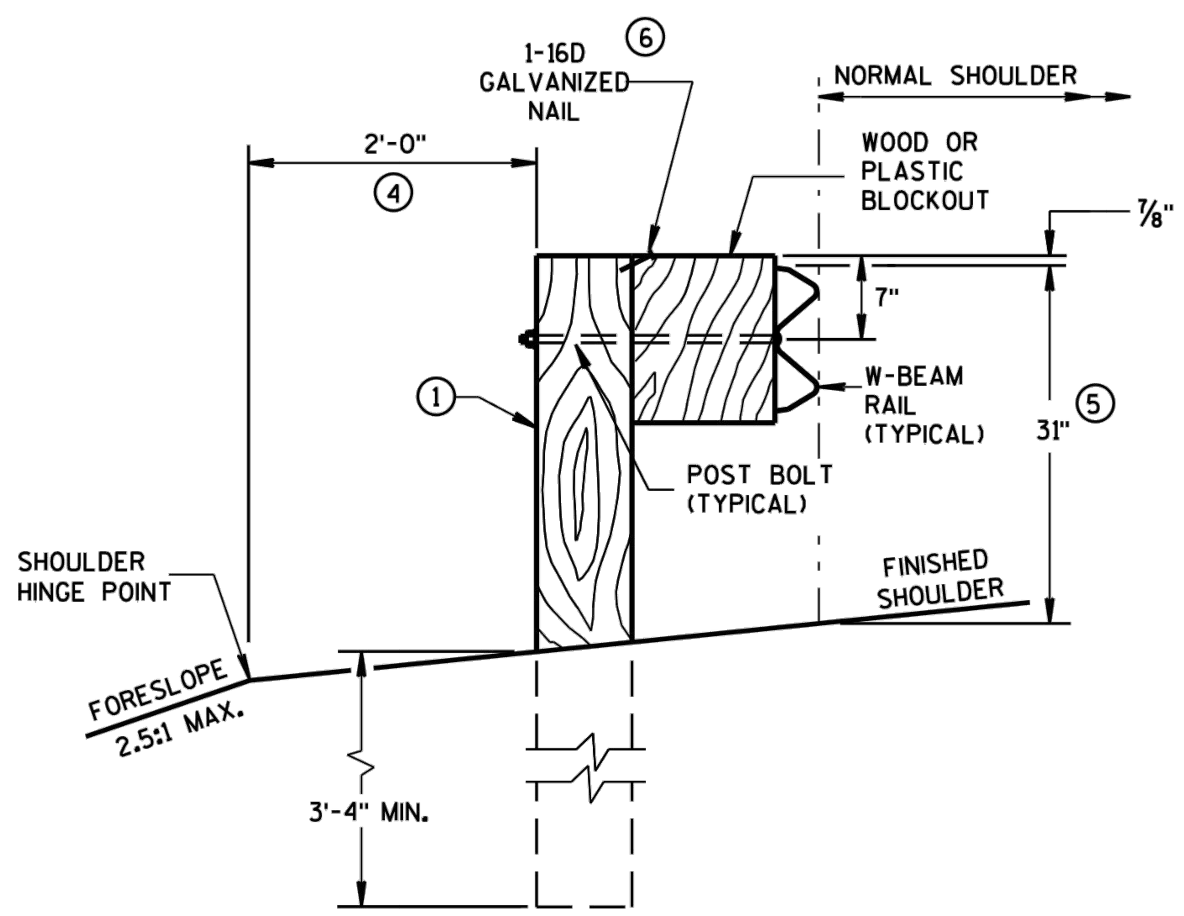

END VIEW
LOCATED ALONG A ROADWAY SHOULDER
STANDARD INSTALLATION

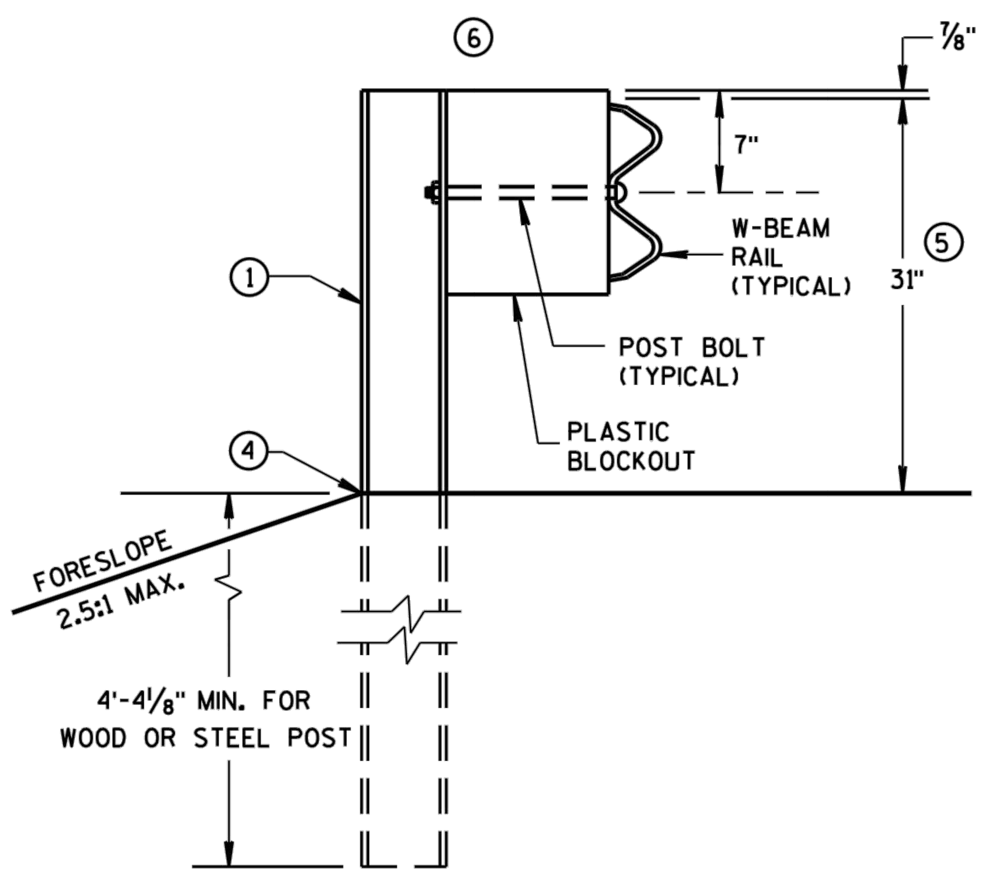

END VIEW
MGS LONGER POST AT HALFPOST SPACING W BEAM (K)

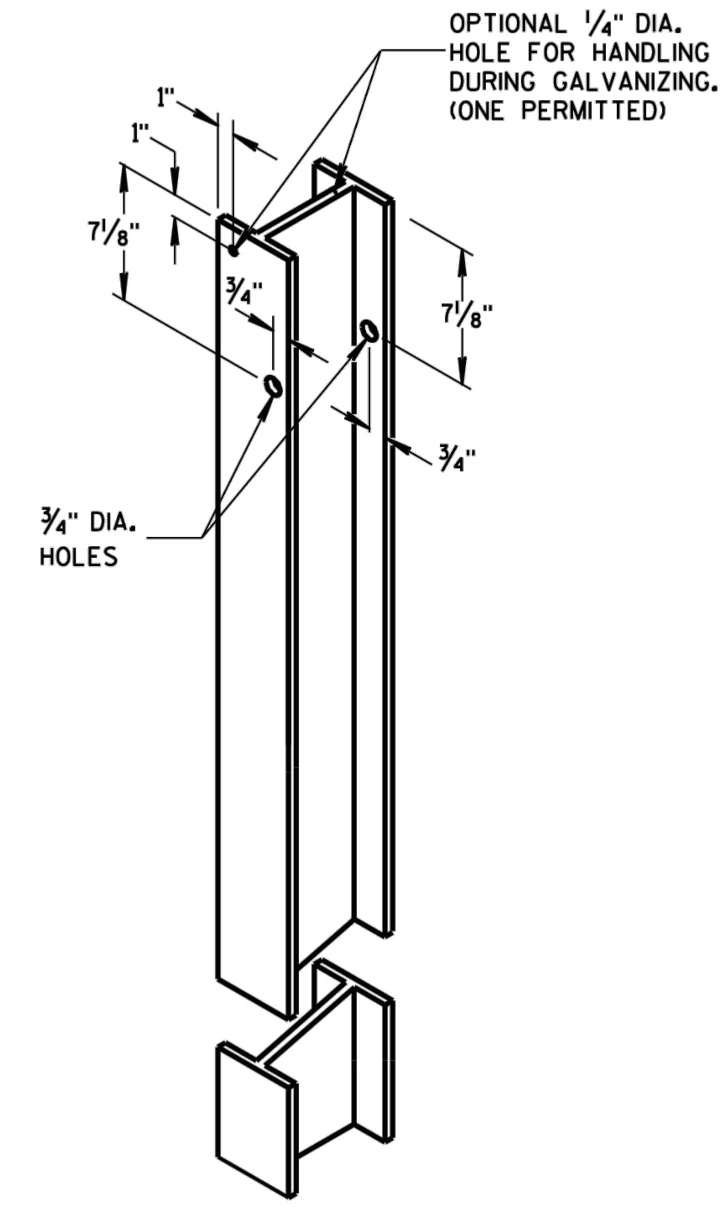

STEEL POST &
HOLE PUNCHING DETAIL
(w6X9) ①

WOOD POST
(6" X 8") NOMINAL ①

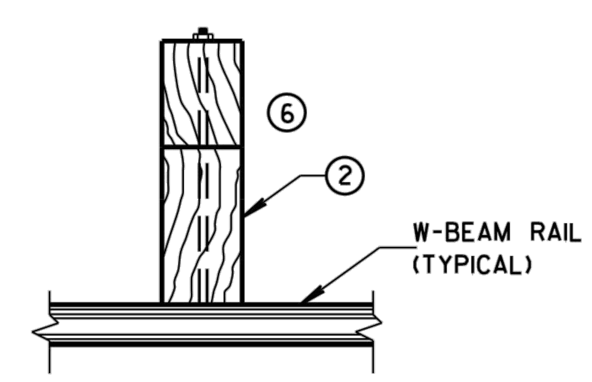

PLAN VIEW
WOOD POST,
BLOCKOUT & BEAM

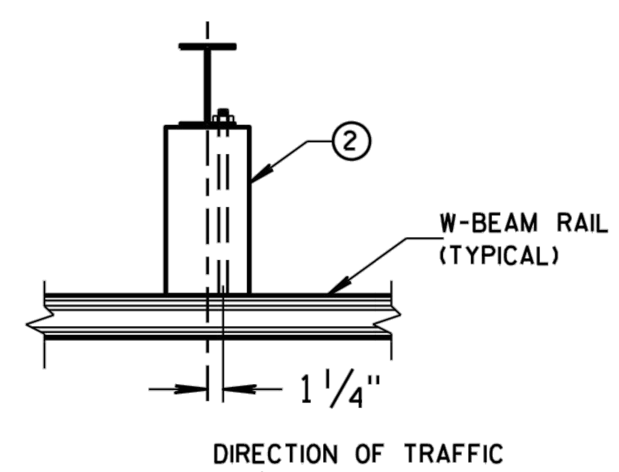

PLAN VIEW
STEEL POST,
PLASTIC BLOCKOUT & BEAM

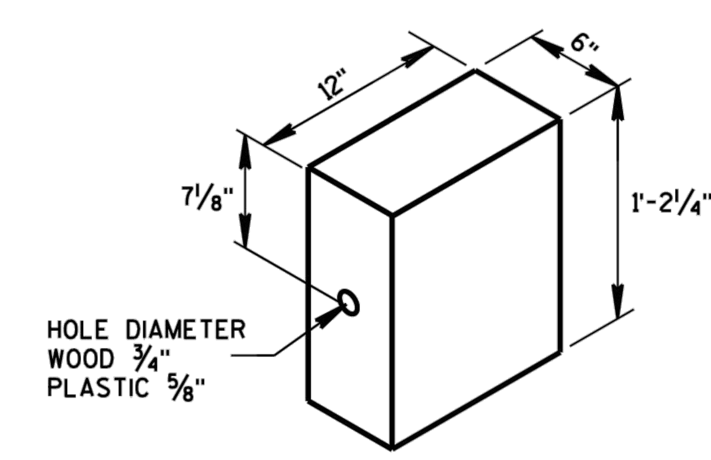

WOOD OR
PLASTIC BLOCKOUT ②

MIDWEST GUARDRAIL SYSTEM
(MGS) GUARDRAIL

STATE OF WISCONSIN
DEPARTMENT OF TRANSPORTATION

REVIEWED: MC DESIGNED: AS DRAFTED: DC

PLAN I DESIGN I DELIVER
www.pinnacle-engr.com

PINNACLE ENGINEERING GROUP
ENGINEERING I NATURAL RESOURCES I SURVEYING

WISCONSIN OFFICE:
15850 W. BLUEMOUND ROAD
BROOKFIELD, WI 53005
(262) 754-8888
CHICAGO I MILWAUKEE : NATIONWIDE

14B42 sheet b: Midwest Guardrail System (MGS) Bolt, Alternative Wood Block, and Additional block or Adjusting post spacing for (

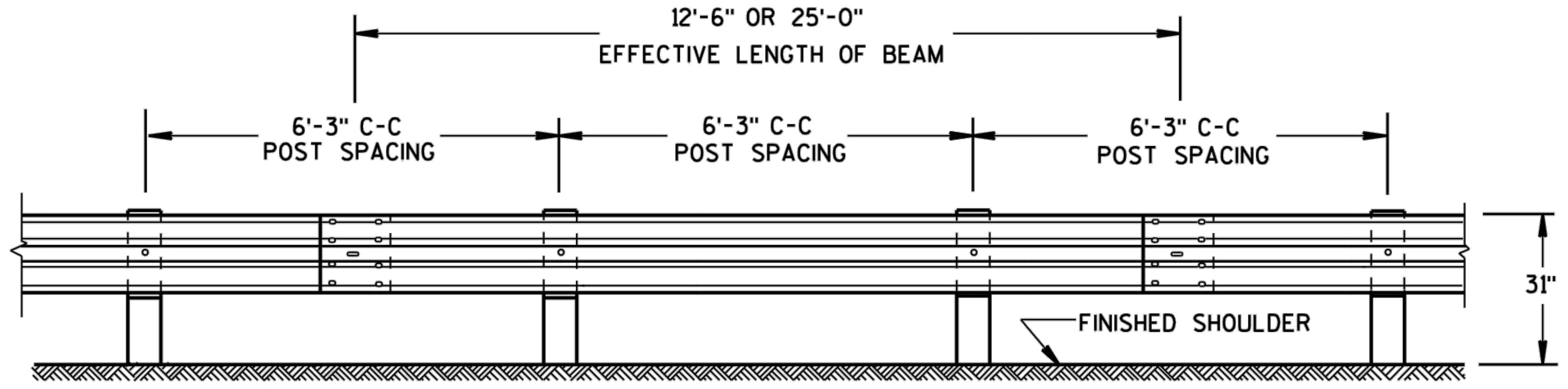

FRONT VIEW

POST SPACING STANDARD INSTALLATION

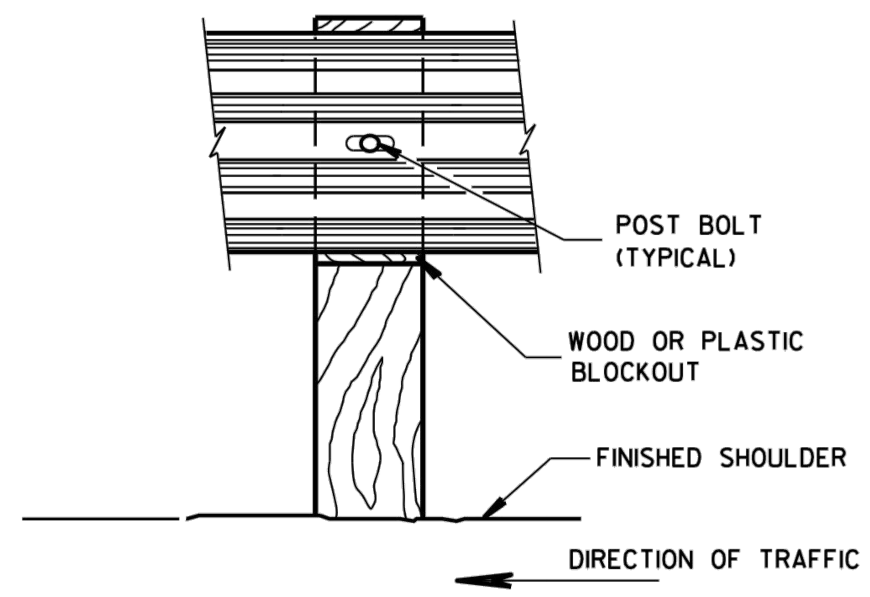

FRONT VIEW AT WOOD POST

GENERAL NOTES

(7) PROVIDE SILVER REFLECTIVE SHEETING ON ALL REFLECTORS EXCEPT THOSE LOCATED ALONG THE LEFT EDGE OF ONE-WAY ROADWAYS, WHICH SHALL BE PROVIDED WITH YELLOW REFLECTIVE SHEETING. SHEETING IS TYPE H. SEE STANDARD SPECIFICATION 637.

(8) DO NOT INSTALL REFLECTORS ON THE FIRST 50 FEET OF THE APPROACH END OF THE ENERGY ABSORBING TERMINAL. RAIL SPLICE LOCATIONS ARE THE ONLY ACCEPTABLE LOCATIONS FOR REFLECTORS.

(9) REVERSE EVERY OTHER REFLECTOR FOR 2-WAY VISIBILITY. THE CONTRACTOR MAY FURNISH TWO-SIDED REFLECTORS IN LIEU OF ONE-SIDED REFLECTORS.

(10) PROVIDE AN ANGLE OF BEND OF 90° ± 1° FOR TWO-SIDED REFLECTORS.

(11) 25 FEET OF HALF POST SPACING IS REQUIRED ON APPROACH AND DEPARTURE ENDS OF QUARTER POST SPACING.

POST BOLTS ARE A ⅝" DIAMETER ASTM A307 GUARDRAIL BOLT. A POST BOLT REQUIRES ⅝" DIAMETER A563A DOUBLE RECESSED (DR) HEAVY HEX NUT AND ⅝" DIAMETER F844 FLAT WASHER. POST BOLTS MAY BE LONGER IF MULTIPLE BLOCKOUTS ARE BEING USED.

GUARD RAIL SPLICE BOLTS ARE A ⅝" DIAMETER ASTM A307 GUARDRAIL HEAD BOLT. A GUARDRAIL SPLICE BOLT REQUIRES ⅝" DIAMETER A563A DOUBLE RECESSED (DR) HEAVY HEX NUT.

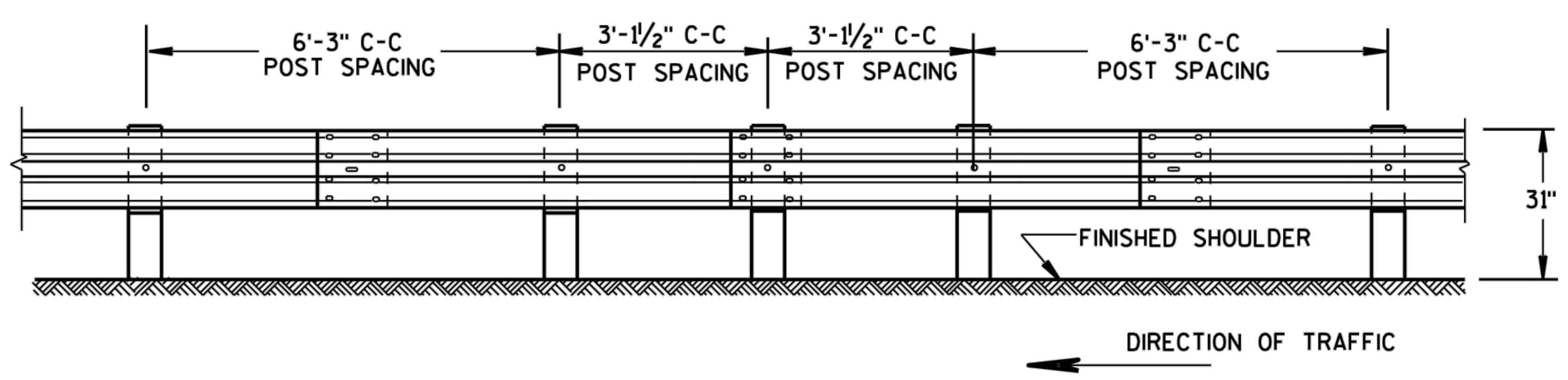

FRONT VIEW

HALF POST SPACING (HS) AND HALF POST SPACING WITH LONGER POSTS (K)

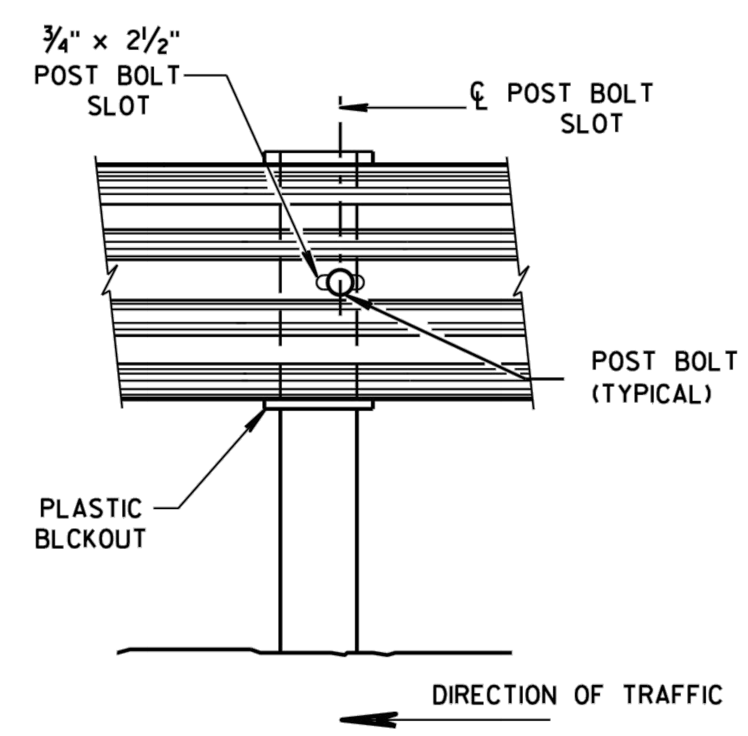

FRONT VIEW AT STEEL POST

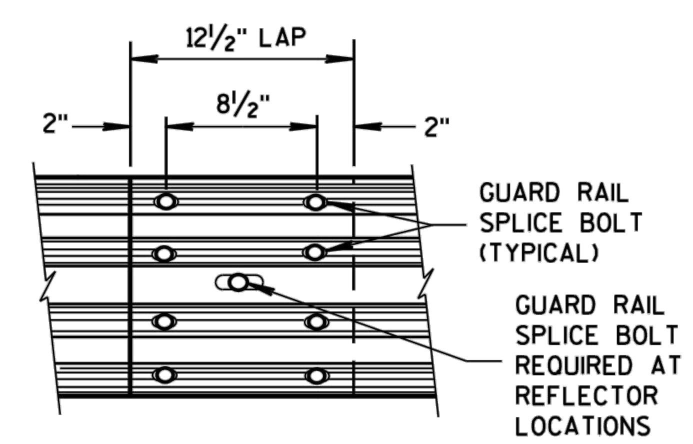

FRONT VIEW

MID-SPAN BEAM SPLICE

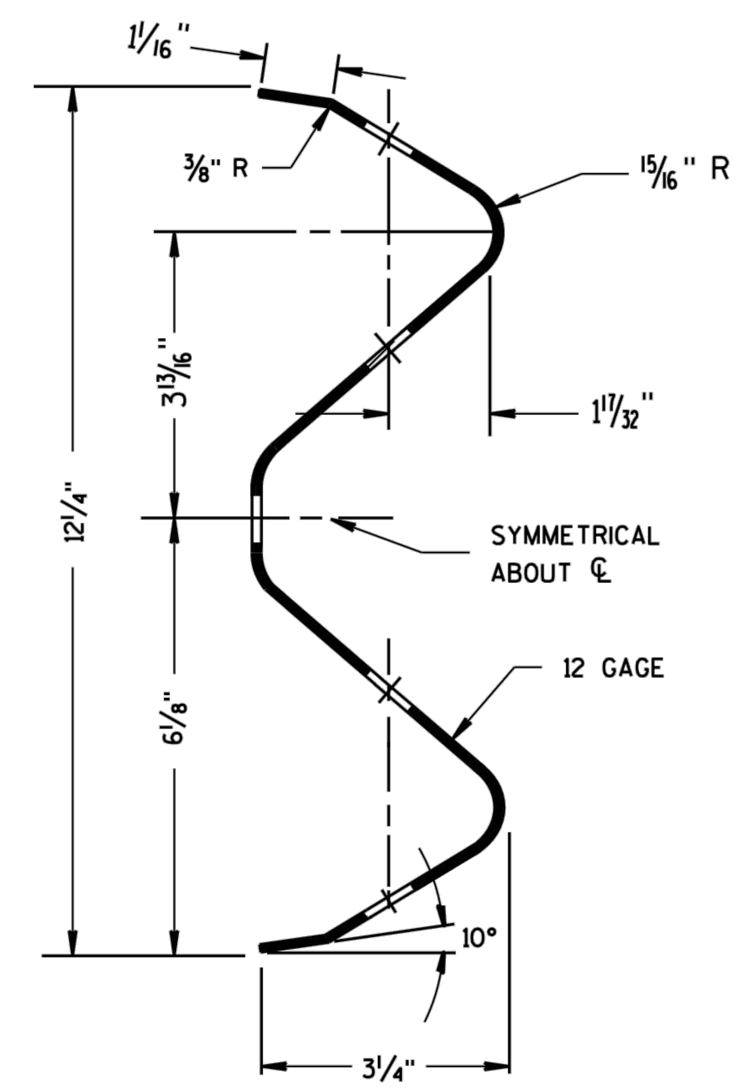

SECTION THRU W-BEAM RAIL

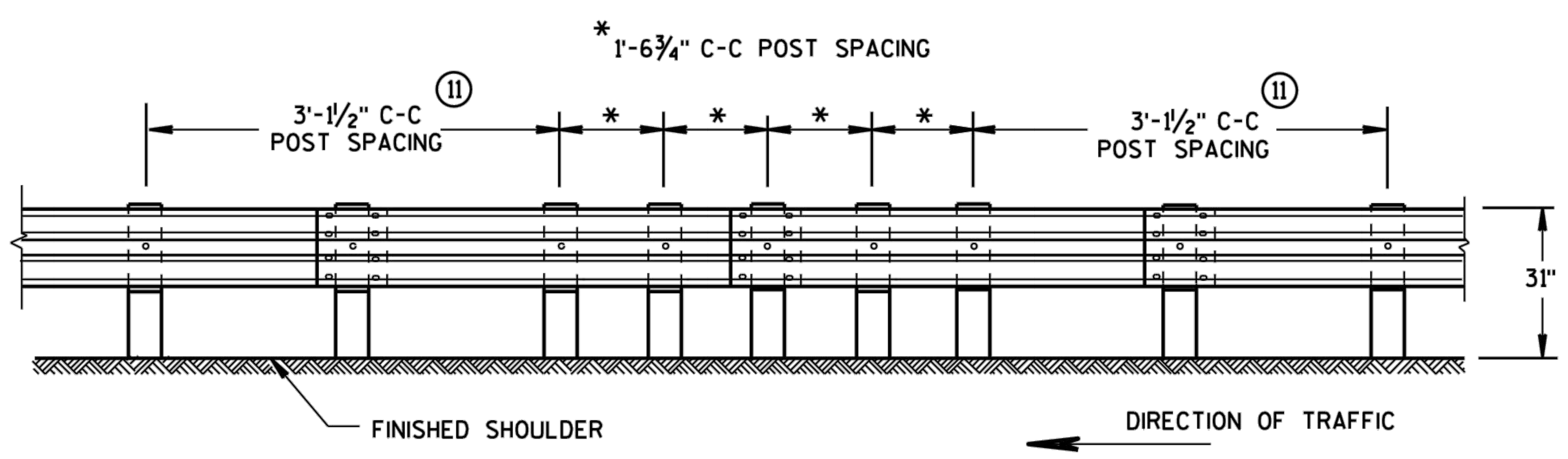

FRONT VIEW

QUARTER POST SPACING (QS)

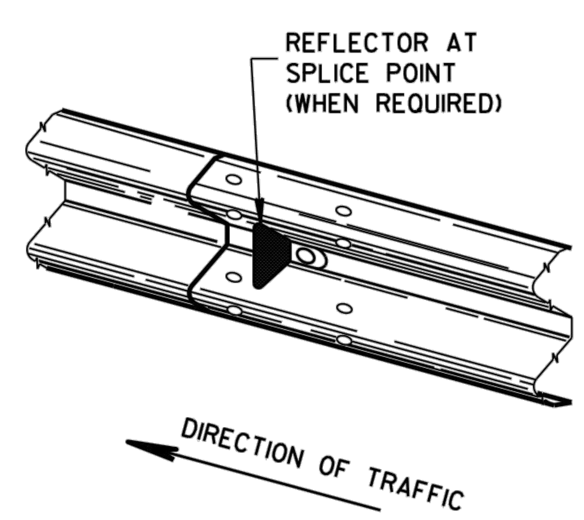

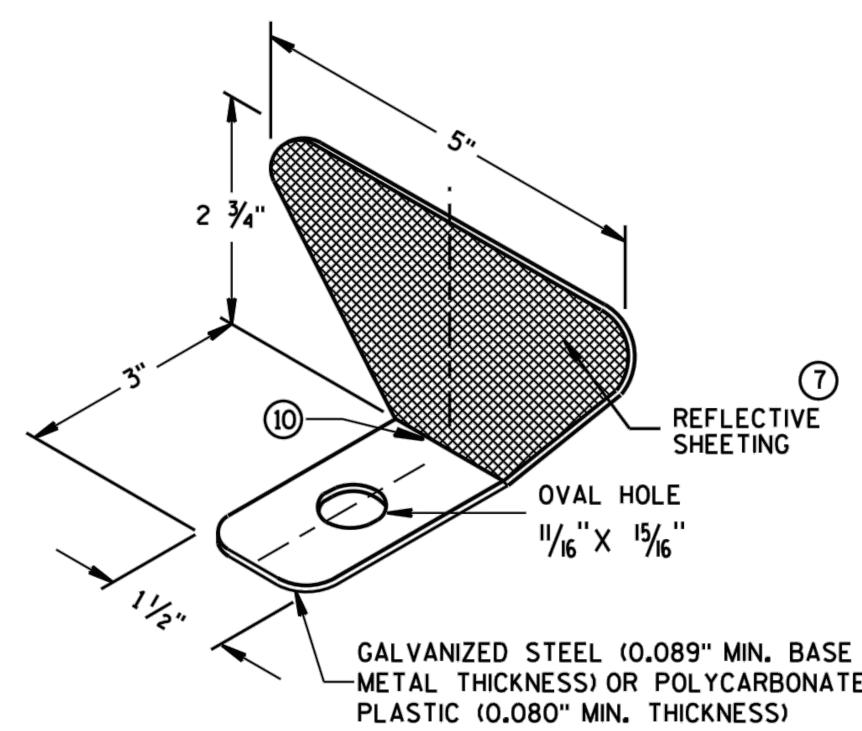

ONE SIDED REFLECTOR DETAIL AND TYPICAL INSTALLATION (7)

REFLECTOR SPACING (8)

	BEAM GUARD LENGTH	REFLECTOR SPACING	NO. SURFACES REFLECTORIZED	MIN. NO. REFLECTORS
ONE WAY TRAFFIC	< 200' > 200'	50' C-C 100' C-C	1 1	3
TWO WAY TRAFFIC	< 200' > 200'	25' C-C 50' C-C	1 (9) 1	6
TWO WAY TRAFFIC	< 200' > 200'	50' C-C 100' C-C	2 (10) 2	3

MIDWEST GUARDRAIL SYSTEM (MGS) GUARDRAIL

STATE OF WISCONSIN
DEPARTMENT OF TRANSPORTATION

6

S.D.D. 14 B 42-3b

REVIEWED: MC
DESIGNED: AS
DRAFTED: DC

PLAN I DESIGN I DELIVER
www.pinnacle-engr.com
PINNACLE ENGINEERING GROUP
ENGINEERING I NATURAL RESOURCES I SURVEYING
WISCONSIN OFFICE:
15850 W. BLUEMOUND ROAD
BROOKFIELD, WI 53005
(262) 754-8888
CHICAGO I MILWAUKEE : NATIONWIDE

14B42 sheet c: Midwest Guardrail System (MGS) Post spacing, Reflector, W-beam rail, Bolt placement

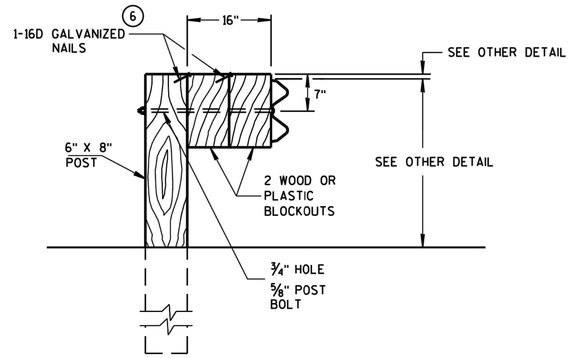

DETAIL FOR 16" BLOCKOUT DEPTH

IT IS ACCEPTABLE TO USE BLOCKOUTS UP TO 16" DEEP TO INCREASE THE POST OFFSET TO AVOID UNDERGROUND OBSTACLES. THERE IS NO LIMIT TO THE NUMBER OF POSTS THAT CAN HAVE ADDITIONAL BLOCKOUTS UP TO 16" DEEP.

NOTE: 1. ALL FILLETS SHALL HAVE A MINIMUM RADIUS OF 1/16".
2. IF THE BOLT EXTENDS MORE THAN 1/4" FROM THE NUT THE BOLT SHOULD BE TRIMMED BACK.

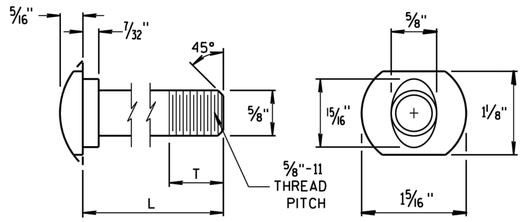

POST BOLT TABLE

L	T (MIN.)
1 1/4"	1 1/8"
2"	1 3/4"
10"	4"
14"	4 1/16"
18"	4"
21"	4 1/16"
25"	4"

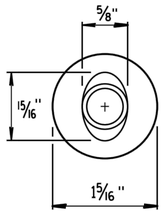

ALTERNATE BOLT HEAD

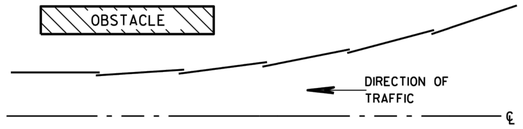

PLAN VIEW

BEAM LAPPING DETAIL

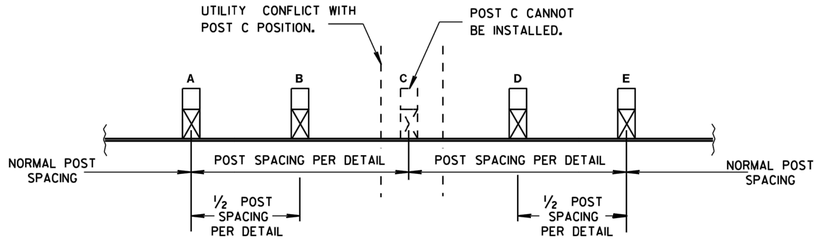

POST DRIVING FOR CONTINUOUS UNDERGROUND OBSTRUCTION

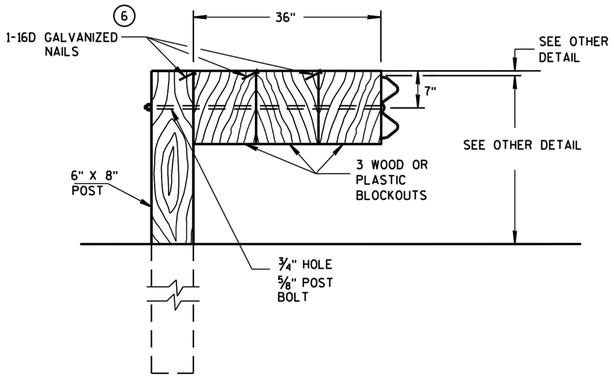

DETAIL FOR 36" BLOCKOUT DEPTH

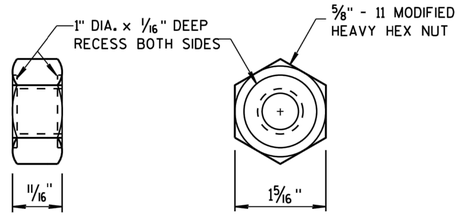

POST BOLT AND RECESS NUT

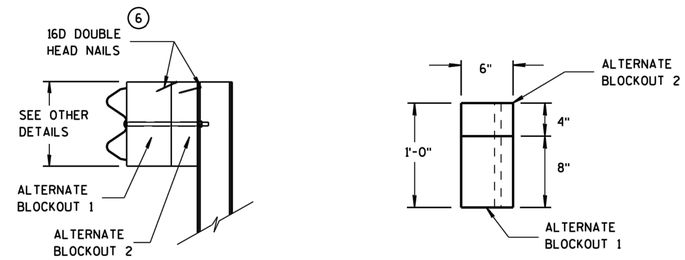

SIDE VIEW TOP VIEW

ALTERNATE WOOD BLOCKOUT DETAIL

NOTES: UNDER SPECIAL CIRCUMSTANCES, SUCH AS AVOIDING OBSTACLES THAT ARE NOT RELOCATED, IT IS ACCEPTABLE TO INSTALL ADDITIONAL BLOCKOUTS TO OBTAIN UP TO 36" DEPTH FOR ONE OR TWO POSTS IN A SECTION OF GUARDRAIL.

DO NOT USE 16" OR 36" BLOCKOUTS IF IT CAUSES THE POST TO BE DRIVEN BEYOND SHOULDER HINGE POINT OR CAUSES A FIXED OBJECT TO BE WITHIN THE DEFLECTION DISTANCE OF THE BARRIER.

MIDWEST GUARDRAIL SYSTEM (MGS) GUARDRAIL

STATE OF WISCONSIN
DEPARTMENT OF TRANSPORTATION

APPROVED
June 2014
DATE
FHWA

/S/ Jerry H. Zogg
ROADWAY STANDARDS DEVELOPMENT ENGINEER

S.D.D. 14 B 42-3c

6

S.D.D. 14 B 42-3c

6

PLAN I DESIGN I DELIVER
www.pinnacle-engr.com
PINNACLE ENGINEERING GROUP
ENGINEERING I NATURAL RESOURCES I SURVEYING
WISCONSIN OFFICE: 15850 W. BLUEMOUND ROAD BROOKFIELD, WI 53005 (262) 754-8888
CHICAGO I MILWAUKEE NATIONWIDE

14B44 sheet a: Midwest Guardrail System (MGS) EAT

GENERAL NOTES

(A) THE SLOPE IN THE AREA BOUNDED BY THE GRADELINE, THE HINGE POINT LINE (HPL), AND THE CLEAR ZONE LIMITS (CZL) SHALL BE 4:1 OR FLATTER.

(B) AFTER FINAL ASSEMBLY, RECHECK CABLE TO BE SURE IT IS TAUT AND HAS NOT RELAXED.

(C) DIFFERENT MANUFACTURES REQUIRE DIFFERENT PERFORATED W-BEAM RAIL END PANELS. SEE MANUFACTURES INFORMATION.

(D) THE TOP OF THE STEEL TUBE ON POST 1 AND POST 2 SHALL NOT BE MORE THAN 3" ABOVE THE FINISH GROUND ELEVATION.

(F) ATTACH ALUMINUM SHEET TO E.A.T. HEAD USING 4 STAINLESS STEEL SELF-TAPPING SCREWS. ONE SCREW PER CORNER.

(G) 1/2" DIAMETER X 3" LONG LAG BOLT AND WASHER.

(H) HARDWARE VARIES BETWEEN DIFFERENT MANUFACTURES. SEE MANUFACTURE'S DRAWING FOR INFORMATION.

(I) DIMENSIONS MAY VARY. SEE MANUFACTURE'S INFORMATION.

SEE SDD 14B42 FOR MORE INFORMATION.

* DO NOT ATTACH BLOCKOUTS TO POSTS 1 AND 2.

DO NOT INSTALL REFLECTORS ON THE FIRST 50 FEET OF THE APPROACH END OF THE ENERGY ABSORBING TERMINAL.

W-BEAM RAIL SPLICES ARE LOCATED AT POST NUMBER 3, AND BETWEEN POST 5 AND 6, BETWEEN POSTS 7 AND 8, AND MIDDLE OF THE SPAN AFTER POST 9.

THE CENTER OF THE UPPER 3 1/2" DIAMETER HOLE ON POST NUMBER 3 THROUGH POST 9 IS TO BE FLUSH WITH THE GROUND LINE UP TO A MAXIMUM OF 2" ABOVE GROUND LINE.

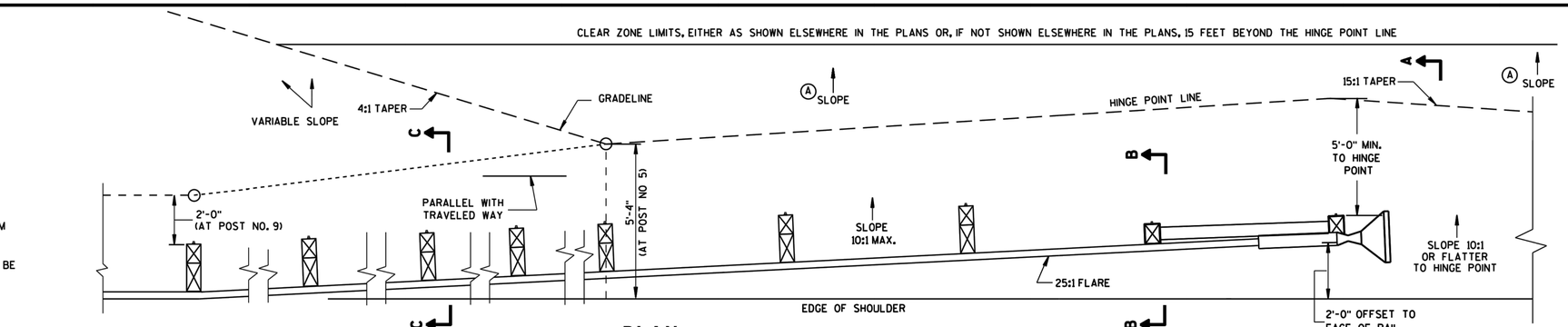

PLAN

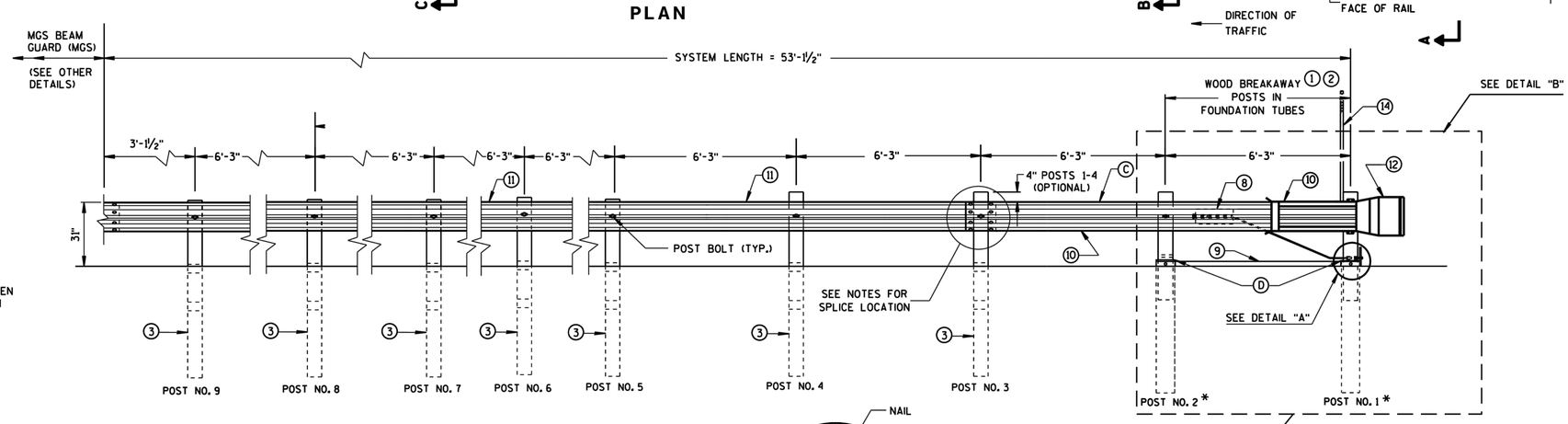

ELEVATION

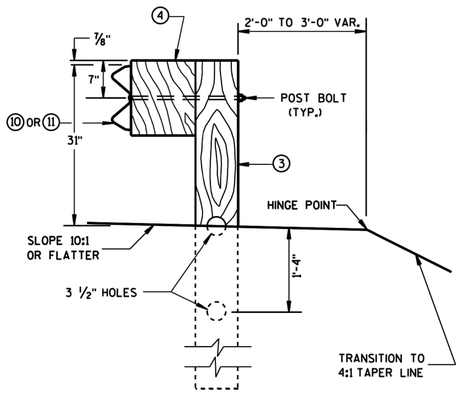

SECTION C-C
TYPICAL AT POST NOS. 3-9

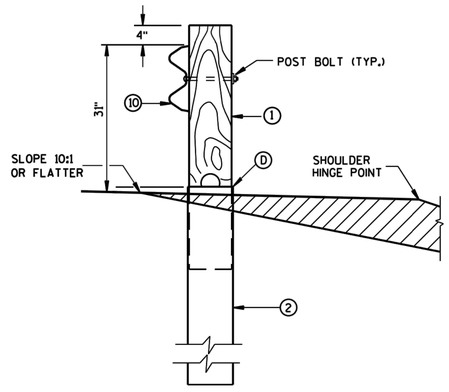

SECTION B-B
TYPICAL AT POST NO. 2*

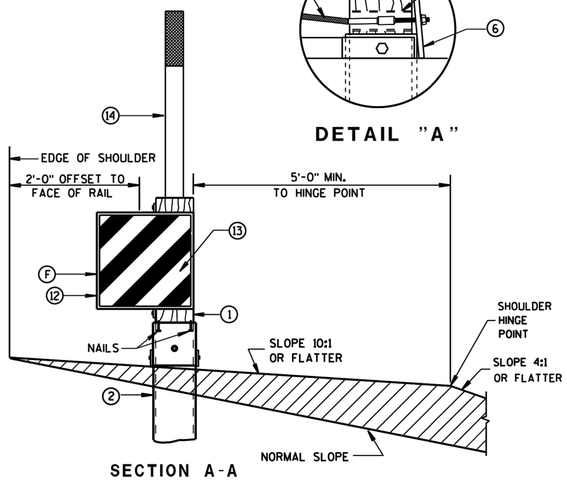

SECTION A-A
TYPICAL AT POST NO. 1*

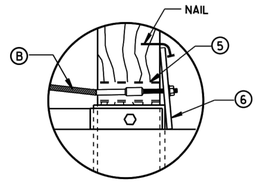

DETAIL "A"

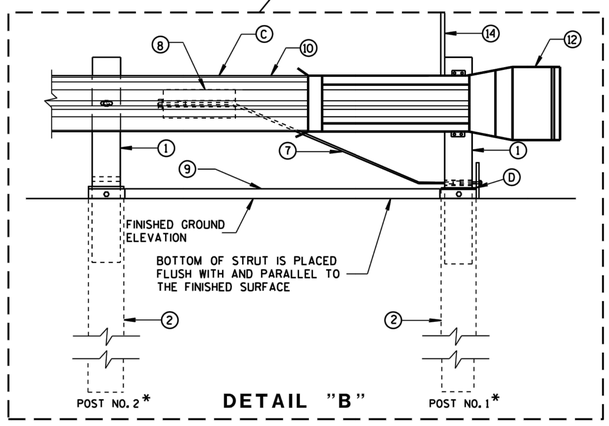

DETAIL "B"

MIDWEST GUARDRAIL SYSTEM ENERGY ABSORBING TERMINAL (MGS)

STATE OF WISCONSIN
DEPARTMENT OF TRANSPORTATION

S.D.D. 14 B 44-2a

S.D.D. 14 B 44-2a

This Document, Either as Drawing or as Assembled Product, Is Subject to Protection by Copyright and Other Intellectual Property Laws and Treaties. © 2011 Pinnacle Engineering Group, L.P. ("Consultant") Consultant is the owner of all rights, including copyright, in and to this document. Reproduction, in whole or in part, in any form or by any means, electronic or mechanical, including photocopying, without the written consent of Consultant. This document is provided "as is" and Consultant makes no representations or warranties, express or implied, with respect to this document or its suitability for any purpose. Consultant shall not be liable for any damages, including but not limited to direct, indirect, special, or consequential damages, arising out of, resulting from, or in connection with the use of this document. Any modifications to this document, or any reproduction of this document in whole or in part, without the written consent of Consultant, shall be at the sole risk of the party modifying or reproducing the document.

			DAT
			R
			DAT
MAC			
MAC			
MAC			
MAC			
			R

ID
ADDR ILLA C MMUT
ADDR ILLA C MMUT
ADDR ILLA C MMUT

C MMI RC C TR CTI C LP
Cr rad Par a nh
Cit Indu tr Cali mia
Tele h ne
Licen e

C TR CTI D TAIL
I IMPR M T PLA R
MA TIC AD R L I TIC C T R
CTH "H" ILLA PL A T PRAIRIE, I

Dra in Pl 1 ar
1" 2"
Use the 1 1 ar if drawing has not been reduced or enlarged. If not, use the 2 1 ar if drawing is 2 inch. If the 2 1 ar is also drawing has changed

DRA DAT
P,LLC
CCC
A
H T
C

PLAN I DESIGN I DELIVER
www.pinnacle-engr.com
PINNACLE ENGINEERING GROUP
ENGINEERING I NATURAL RESOURCES I SURVEYING
WISCONSIN OFFICE: 15850 W. BLUEMOUND ROAD BROOKFIELD, WI 53005 (262) 754-8888
CHICAGO I MILWAUKEE I NATIONWIDE
P A

REVIEWED: MC
DESIGNED: AS
DRAFTED: DC

14B44 sheet b: Midwest Guardrail System (MGS) EAT Ground Strut, Anchor Cable Box

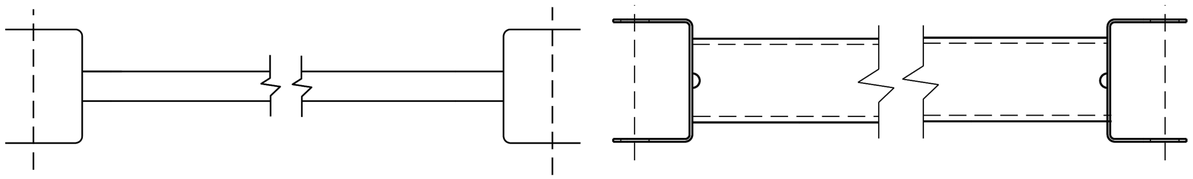

GENERIC GROUND STRUT (9) (H)

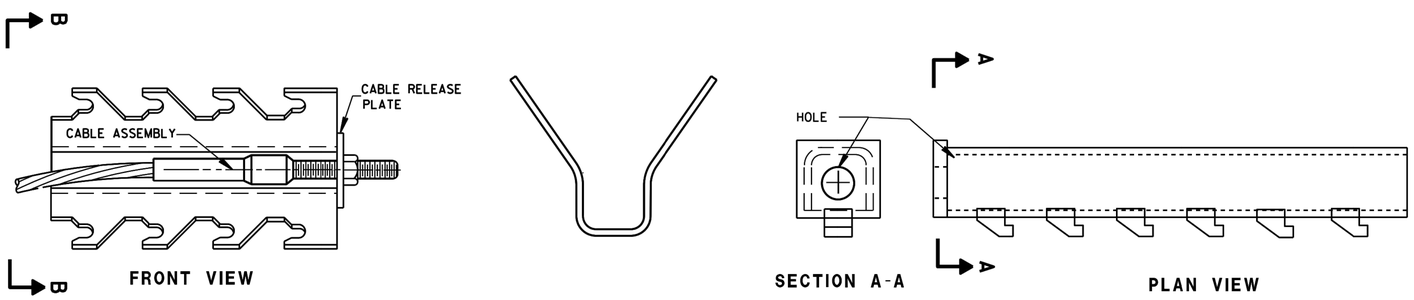

GENERIC ANCHOR CABLE BOX (8) (H)

BILL OF MATERIALS

PART NO.	DESCRIPTION MATERIALS PROVIDED BY MGS EAT MANUFACTURER. SEE MANUFACTURER'S DETAILS FOR MORE INFORMATION.
1	WOOD BREAKAWAY POST
2	6" X 8" X 0.188", 6'-0" LONG FOUNDATION TUBE AT POSTS 1 AND 2
3	WOOD CRT
4	WOOD BLOCKOUT
5	PIPE SLEEVE
6	BEARING PLATE
7	BCT CABLE ASSEMBLY
8	ANCHOR CABLE BOX
9	GROUND STRUT
10	PERFORATED W-BEAM RAIL END PANEL, 12'-6" LONG.
11	STANDARD W-BEAM RAIL. MULTIPLE SECTIONS REQUIRED. SECTIONS VARY IN LENGTH.
12	END SECTION EAT
13	0.040" ALUMINUM SHEET WITH REFLECTIVE SHEETING TYPE F PER SECTION 637 OF THE STANDARD SPECIFICATIONS
14	EAT MARKER POST - YELLOW (SEE APPROVED PRODUCTS LIST)

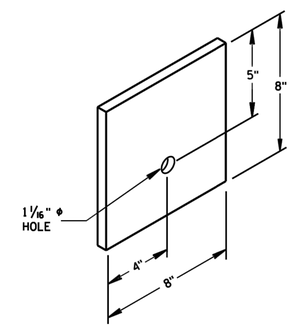

BEARING PLATE (6)

MIDWEST GUARDRAIL SYSTEM
ENERGY ABSORBING TERMINAL
(MGS)

STATE OF WISCONSIN
DEPARTMENT OF TRANSPORTATION

S.D.D. 14 B 44-2b

6

S.D.D. 14 B 44-2b

6

This Document, Either as Drawing or as Assembly, is the Property of Pinnacle Engineering Group Construction Co. L.P. ("Company") and is Protected by Copyright and Other Intellectual Property Rights. It is Provided to Recipient on a Limited Basis and Must Be Returned to Company Upon Request. Recipient Agrees to Use the Information Only for Its Own Use and Not Disclose It to Others Without the Written Consent of Company. This Document, or any Part Thereof, Is Not Intended for Use by Recipient as a Stand-Alone Document and Must Be Used by Recipient Only in Connection with Company's Services. Recipient Agrees to Indemnify and Hold Company Harmless for Any Reuse of This Document or Any Part Thereof for Any Purpose Other Than That Specifically Authorized by Company in Writing. Recipient Agrees to Destroy or Return This Document and All Copies Thereof at Company's Option Upon Request.

			DAT
			R
			DAT
			R

	ID	MAC	
	ADDR ILLA C MM T	MAC	
	ADDR ILLA C MM T	MAC	
	ADDR ILLA C MM T	MAC	

C MM RC C TR CTI C LP
Cr ad Par
th r
CtC Indu tr Cal mia
Tele h ne
Licen e

C TR CTI D TAIL
RI IMPR M T PLA R
MA TIC AD R L I TIC C T R
CTH "H" ILLA PL A T PRAIRI I

Drawin Pl t ar
The this drawing has not been reduced or enlarged from original. The drawing scale is 1 inch for the original size drawing has changed.

DRA DAT
P ,LLC
CCC
A
H T
C

PLAN I DESIGN I DELIVER
www.pinnacle-engr.com

PINNACLE ENGINEERING GROUP
ENGINEERING I NATURAL RESOURCES I SURVEYING

WISCONSIN OFFICE:
15850 W. BLUEMOUND ROAD
BROOKFIELD, WI 53005
(262) 754-8888
CHICAGO I MILWAUKEE : NATIONWIDE

P A

REVISED: MC
DESIGNED: AS
DRAFTED: BC

14B44 sheet c: Midwest Guardrail System (MGS) EAT Foundation Tube Details, Breakaway Post Detail, Block Detail, Marker Post

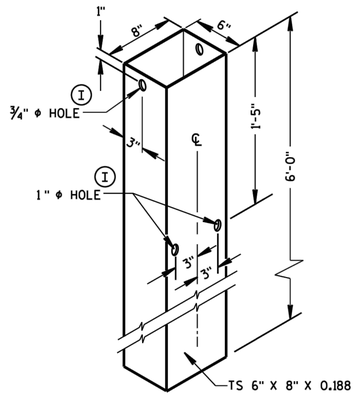

FOUNDATION TUBE (2)

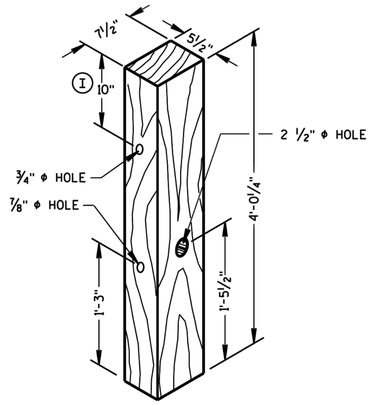

POSTS NUMBER 1 AND 2

WOOD BREAKAWAY POST (1)

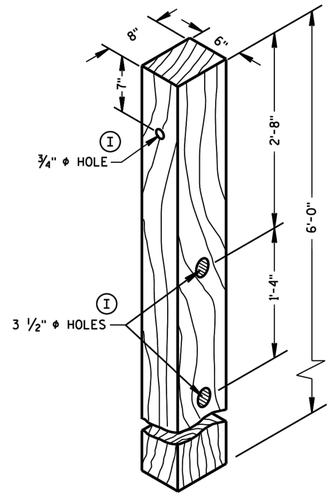

POSTS NUMBER 3-9

WOOD CRT POST (3)

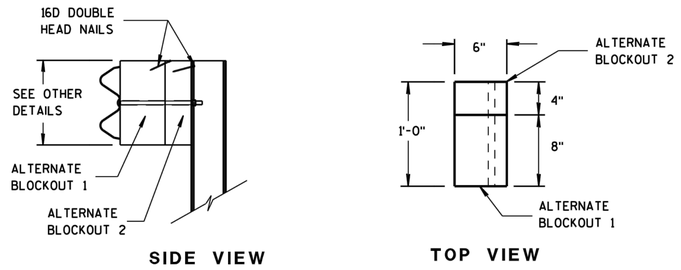

ALTERNATE WOOD BLOCKOUT DETAIL

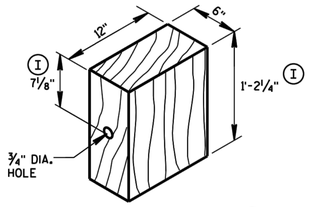

WOOD BLOCKOUT (4)

REQ'D. AT ALL POSTS EXCEPT POST NO'S 1 & 2

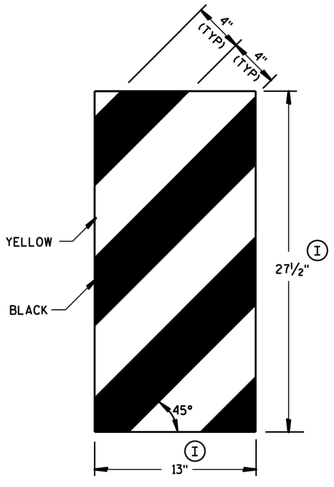

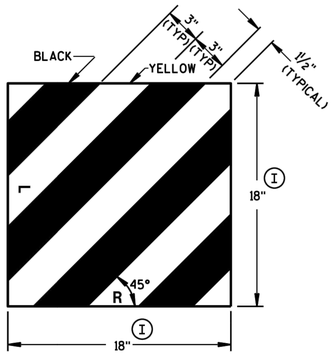

GENERIC REFLECTIVE SHEETING (13) (H)

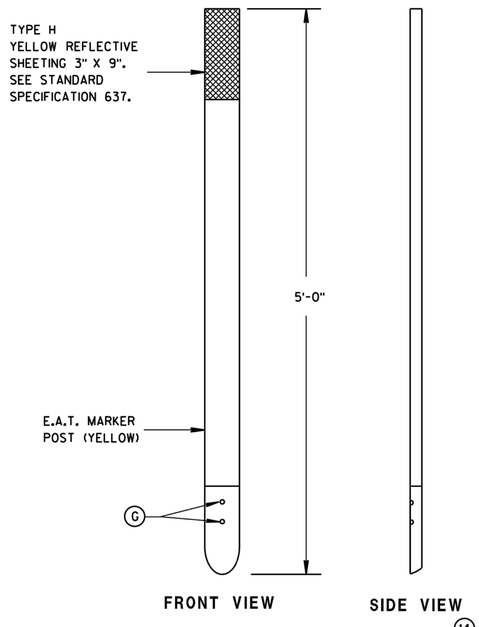

E.A.T. MARKER POST (14)

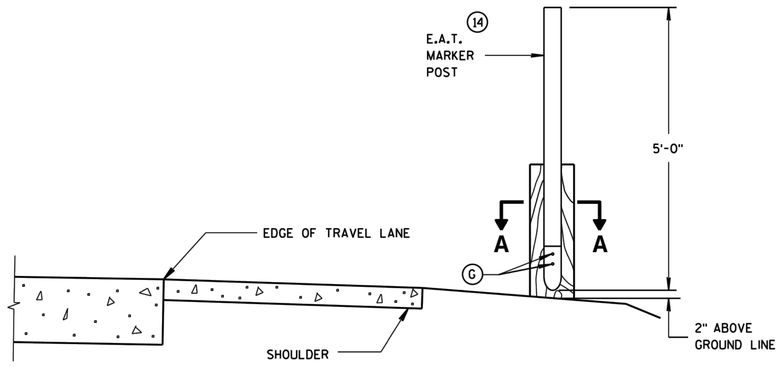

TYPICAL INSTALLATION OF E.A.T. MARKER POST BACKSIDE OF POST NO. 1

(E.A.T. AND RAIL REMOVED FOR CLARITY)

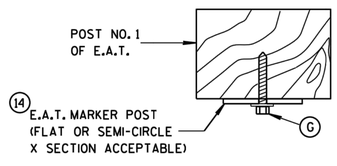

SECTION A-A

MIDWEST GUARDRAIL SYSTEM ENERGY ABSORBING TERMINAL (MGS)

STATE OF WISCONSIN
DEPARTMENT OF TRANSPORTATION

APPROVED June 2014 — DATE
/S/ Jerry H. Zogg — ROADWAY STANDARDS DEVELOPMENT ENGINEER
FHWA

S.D.D. 14 B 44-2c

6

S.D.D. 14 B 44-2c

6

C□□□TR□CTI□□ D□TAIL□

□□□I□□□RI□□ IMPR□□□M□□T□ PLA□□ □□R

MA□□□TIC □AD□□R L□□I□TIC□ C□□T□R

CTH "H" □ILLA□□ □□PL□A□T PRAIRI□, □ I

PLAN I DESIGN I DELIVER

PINNACLE ENGINEERING GROUP

ENGINEERING I NATURAL RESOURCES I SURVEYING

WISCONSIN OFFICE: 15850 W. BLUEMOUND ROAD BROOKFIELD, WI 53005 (262) 754-8888

CHICAGO I MILWAUKEE : NATIONWIDE

P□□ □□□ □□□□□□□A

DRA□ □ □□ DAT□

P□□,LLC □□□□□

CCC □□□ □□□

□□□□□□A

□H□□T □□□

C□□□

14B47 sheet a: Midwest Guardrail System (MGS) Type 2 Terminal: Terminal Layout, End and Section Detail

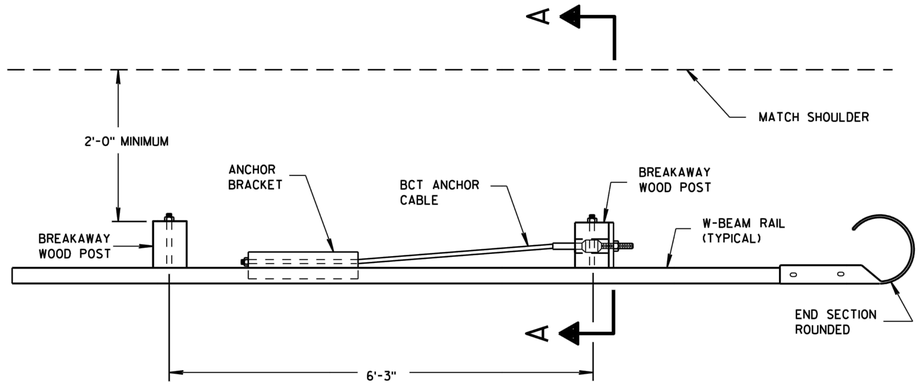

PLAN VIEW

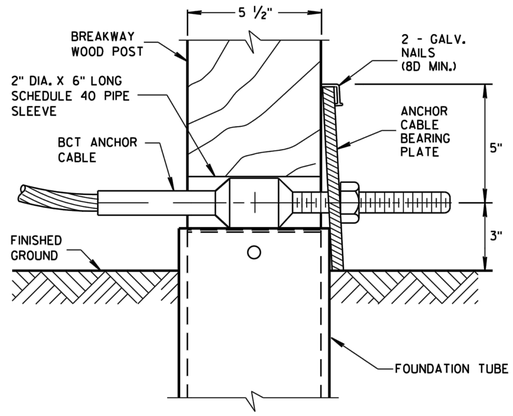

DETAIL A

POST NO. 1
GROUNG STRUT NOT SHOWN FOR CLARITY.

GENERAL NOTES

SEE SDD 14 B 42 FOR MORE INFORMATION.

END SECTION BOLTS AND NUTS HAVE THE SAME MATERIAL REQUIREMENTS AS SPLICE BOLTS.

FOUNDATION TUBE BOLTS ARE ⅞" DIAMETER ASTM A307 HEX HEAD BOLT. FOUNDATION TUBE BOLTS REQUIRE ASTM A563 A NUT AND TWO ASTM F844 ⅞" DIAMETER FLAT WASHERS. INSTALL ONE WASHER UNDER BOLT HEAD AND ONE WASHER UNDER NUT.

ANCHOR BRACKET AND GROUND STRUT BOLTS ARE A ⅝" DIAMETER ASTM A307 HEX HEAD BOLT. ANCHOR BRACKET BOLTS REQUIRE ASTM A563 A NUT AND TWO ASTM F844 ⅝" DIAMETER FLAT WASHERS. INSTALL ONE WASHER UNDER BOLT HEAD AND ONE WASHER UNDER NUT.

W-BEAM END SECTION ROUNDED HAS THE SAME MATERIAL PROPERTIES AS STANDARD STEEL RAIL.

(A) TOP OF FOUNDATION TUBE SHALL BE NO MORE THAN 3" ABOVE FINISHED GROUND.

(B) FOR NEW CONSTRUCTION TOP OF RAIL IS 31" ± 1".
FOR EXISTING INSTALLATIONS TOP OF RAIL IS BETWEEN 27¾" TO 32" ± 1".

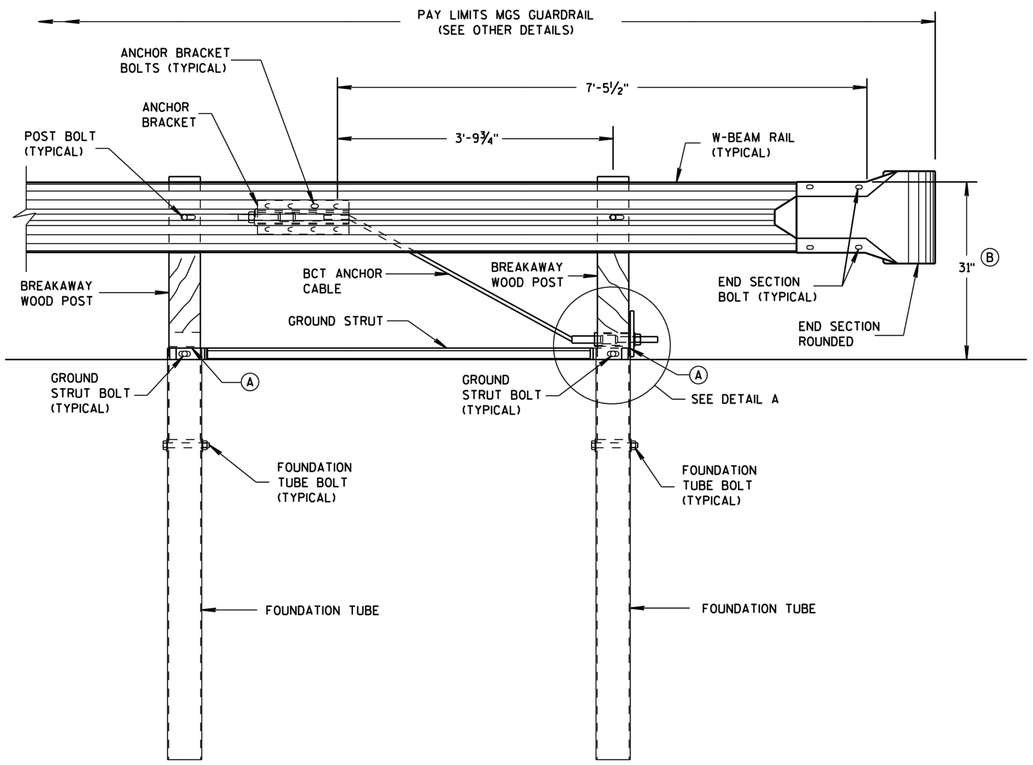

FRONT VIEW

END RAIL DETAIL

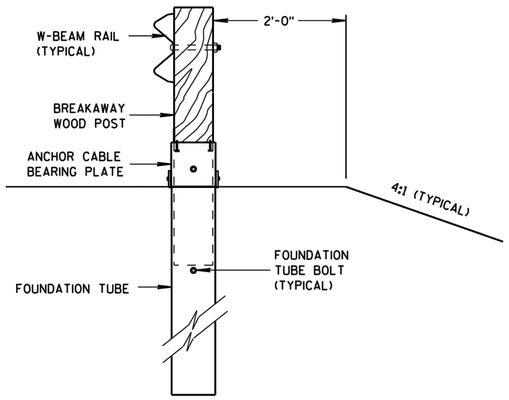

SECTION A-A

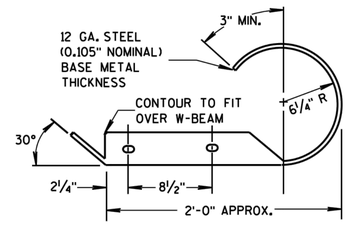

PLAN VIEW

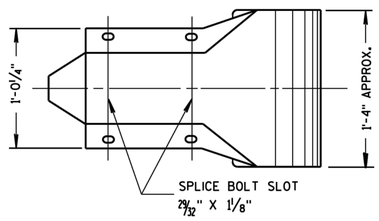

FRONT VIEW

W BEAM END SECTION ROUNDED

MIDWEST GUARDRAIL SYSTEM (MGS) TYPE 2 TERMINAL

STATE OF WISCONSIN
DEPARTMENT OF TRANSPORTATION

6

S.D.D. 14 B 47-2a

6

S.D.D. 14 B 47-2a

This Documents, Either as Drawing or as Assemblage of Specifications, Is the Property of Pinnacle Construction Co. LLP ("Consultant") ... without the written consent of Consultant. This document ... Licenses ... DATE

MAC			DATE
MAC			
MAC			
MAC			

ADDR	ILLA	C MM	T
ADDR	ILLA	C MM	T
ADDR	ILLA	C MM	T
ADDR	ILLA	C MM	T

C MM RC C TR CTI C LP
Cr Tr ad Pa a
th
Cit Indu tr Cali rnia
Tele hone
Licen e

C TR CTI D TAIL

I MPR M T PLA R
MA TIC AD R L TIC C T R

CTH "H" ILLA PL A T PRAIRIE, I

Dra in Pl t ar

DRA DAT
P ,LLC

CCC
A

H T

C

PLAN I DESIGN I DELIVER
www.pinnacle-engr.com

PINNACLE ENGINEERING GROUP
ENGINEERING I NATURAL RESOURCES I SURVEYING

WISCONSIN OFFICE:
15850 W. BLUEMOUND ROAD
BROOKFIELD, WI 53005
(262) 754-8888
CHICAGO I MILWAUKEE : NATIONWIDE

P A

14B47 sheet b: Midwest Guardrail System (MGS) Type 2 Terminal: CRT details, Foundation Tube details, BCT details

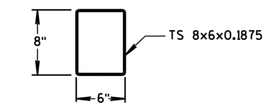

PLAN VIEW

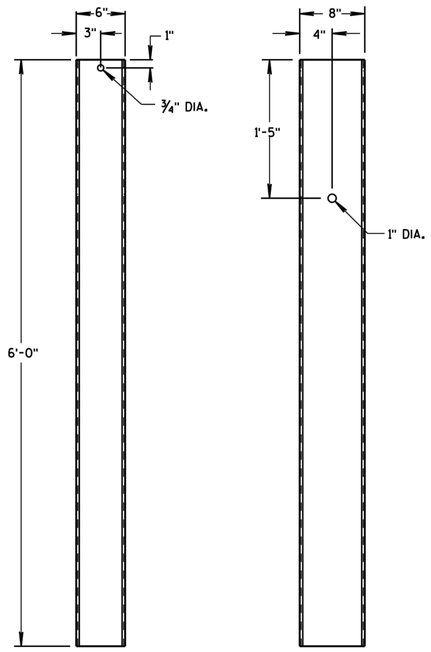

FRONT VIEW SIDE VIEW

FOUNDATION TUBE

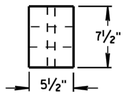

PLAN VIEW

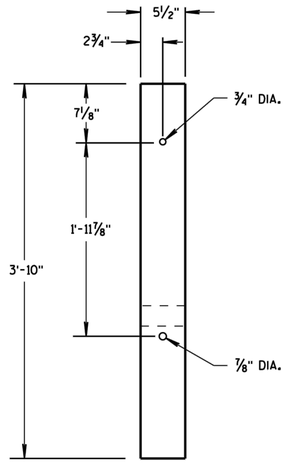

FRONT VIEW

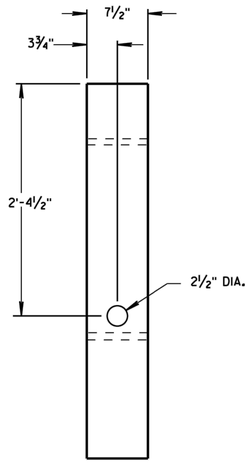

SIDE VIEW

BREAKAWAY WOOD POST

GENERAL NOTES

BCT ANCHOR CABLE IS A ¾" DIAMETER 6X19 IWRC IPS GALVANIZED WIRE ROPE. THE SWAGED FITTINGS AND STUD ARE REQUIRED. END FITTING SHALL BE MACHINED FROM HOT-ROLLED CARBON STEEL CONFORMING TO ASTM A576 GRADE 1035 AND GALVANIZED ACCORDING TO ASTM A123. TREADED STUD SHALL CONFORM TO ASTM A325 OR SAE GRADE 5. MINIMUM BREAKING STRENGTH OF WIRE ROPE IS 43,000 LB. WIRE ROPE IS TO BE TAUT.

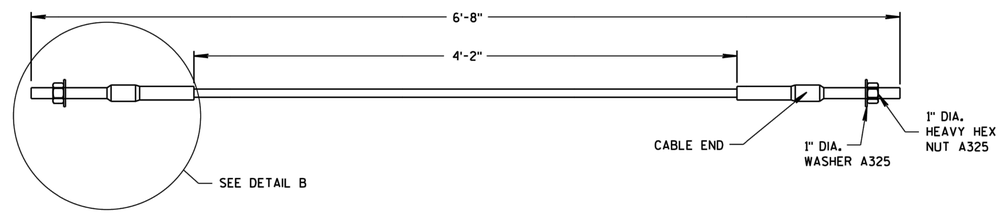

BCT ANCHOR CABLE

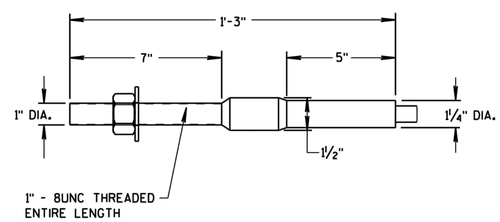

DETAIL B

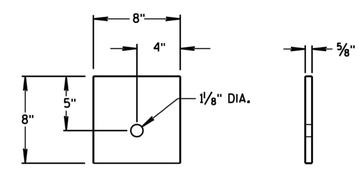

SIDE VIEW FRONT VIEW

ANCHOR CABLE
BEARING PLATE

MIDWEST GUARDRAIL
SYSTEM (MGS) TYPE 2 TERMINAL

STATE OF WISCONSIN
DEPARTMENT OF TRANSPORTATION

6

6

S.D.D. 14 B 47-2b

S.D.D. 14 B 47-2b

This Document, Either as Drawing or the Assemblage of Data Represents the Property of Pinnacle Construction Co. L.P. ("Company") ... without the written consent of Company. This document is to be returned to Company upon request.

C□□□TR□CTI□□ D□TAIL□

MA□□□TIC □AD□□R L□□□I□TIC□ C□□T□R

CTH "H" □ILLA□□□□PL□A□A□T PRAIRI□, □ I

Drai□in□ Pl□□ar

DRA□ □ □□ DAT□

P□□,LLC □□□□□

CCC □□□ □□□

□□□□□□A

□H□□T □□□

C□□□

PLAN I DESIGN I DELIVER
www.pinnacle-engr.com

PINNACLE ENGINEERING GROUP
ENGINEERING I NATURAL RESOURCES I SURVEYING

WISCONSIN OFFICE:
15850 W. BLUEMOUND ROAD
BROOKFIELD, WI 53005
(262) 754-8888
CHICAGO I MILWAUKEE : NATIONWIDE

P□□ □□□ □□□□□□□A

14B47 sheet c: Midwest Guardrail System (MGS) Type 2 Terminal: Terminal Ground Strut Details, Cable Barrier Anchor Details

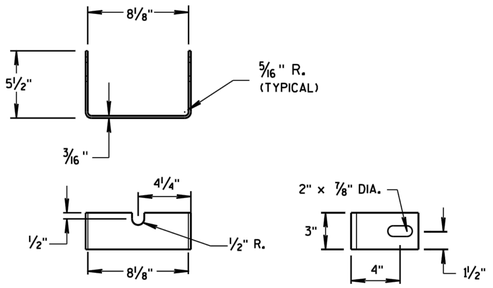

YOKE DETAIL

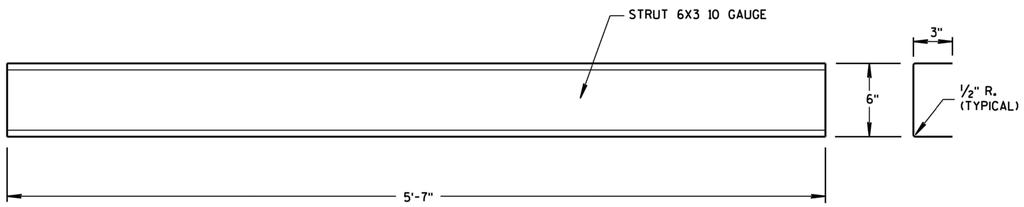

STRUT DETAIL

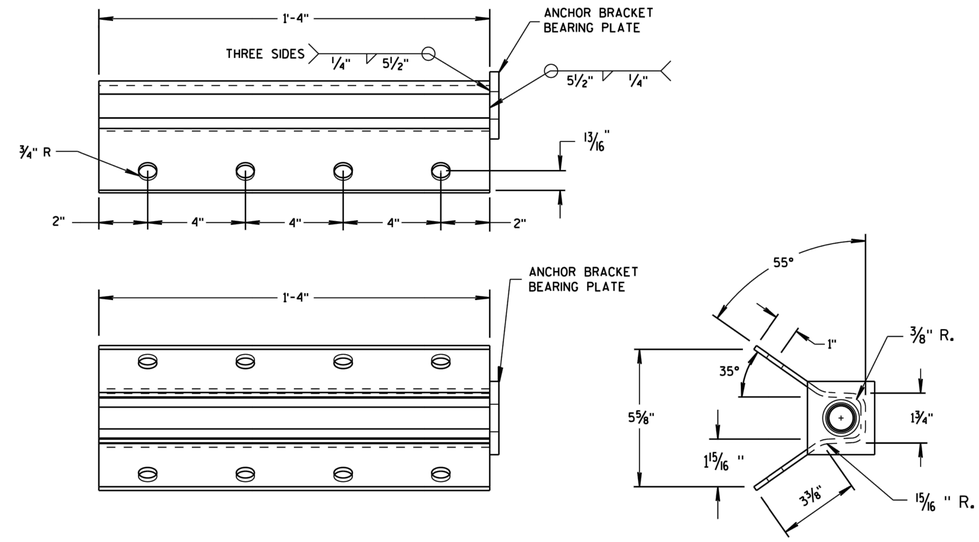

ANCHOR BRACKET

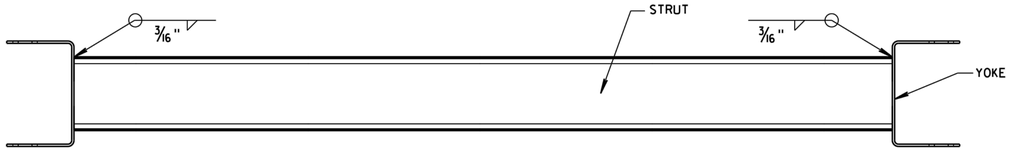

PLAN VIEW

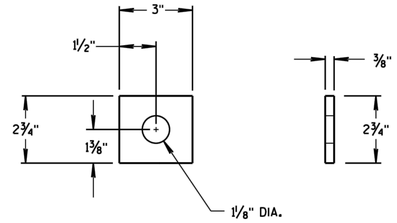

ANCHOR BRACKET
BEARING PLATE

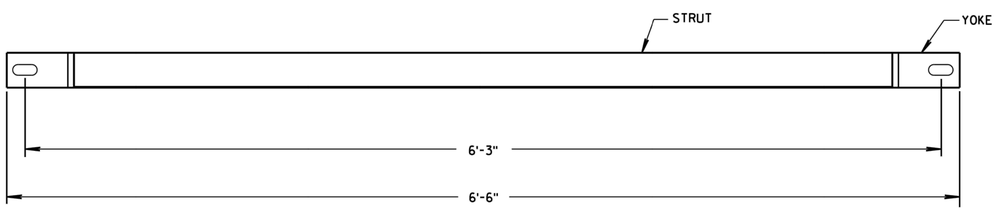

FRONT VIEW

GROUND STRUT DETAIL

6

S.D.D. 14 B 47-2c

MIDWEST GUARDRAIL
SYSTEM (MGS) TYPE 2 TERMINAL

STATE OF WISCONSIN
DEPARTMENT OF TRANSPORTATION

APPROVED
June 2014
DATE
FHWA

/S/ Jerry H. Zogg
ROADWAY STANDARDS DEVELOPMENT ENGINEER

6

S.D.D. 14 B 47-2c

This Document, Either as Drawing or the Assembling Of Elements Thereon, Is Property of Pinnacle Construction Co. L.P. ("Company") The Company Retains All Rights Including Patent Rights, Trade Secrets, Copyright, Trademark, Or Other Rights Without the written consent of Company. This document is to be used only for the purpose for which it is furnished and is not to be used for any other purpose or in any other manner without the written consent of Company. Reproduction of this document or any part thereof is prohibited. Recipient agrees to return this document to Company on demand.

			DAT
			R
	MAC		DAT
	MAC		
	MAC		
	MAC		
			R

C MM RC C TR CTI C LP
Cr ad Parcia rth
th
Cit Indu tr Cali mia
Tele hne
Licen e

C TR CTI D TAIL
RI IMPR M T PLA R
MA TIC AD R L TIC C T R
CTH "H" ILLA PLA ART PRAIRI I

Dra in Pt ar
1" = 1"
Use the dri ar to ensure dra in ha ent een reduced or enlarged ro ri inal ri ing. If ar is n t e ad 1 inch the ri inal ile dra in ha hanged.

DRA DAT
P LLC

CCC
A

H T

C

PLAN I DESIGN I DELIVER
www.pinnacle-engr.com

PINNACLE ENGINEERING GROUP
ENGINEERING I NATURAL RESOURCES I SURVEYING

WISCONSIN OFFICE:
15850 W. BLUEMOUND ROAD
BROOKFIELD, WI 53005
(262) 754-8888
CHICAGO I MILWAUKEE : NATIONWIDE

P A

REVIEWED: MS
DESIGNED: AS
DRAFTED: DC

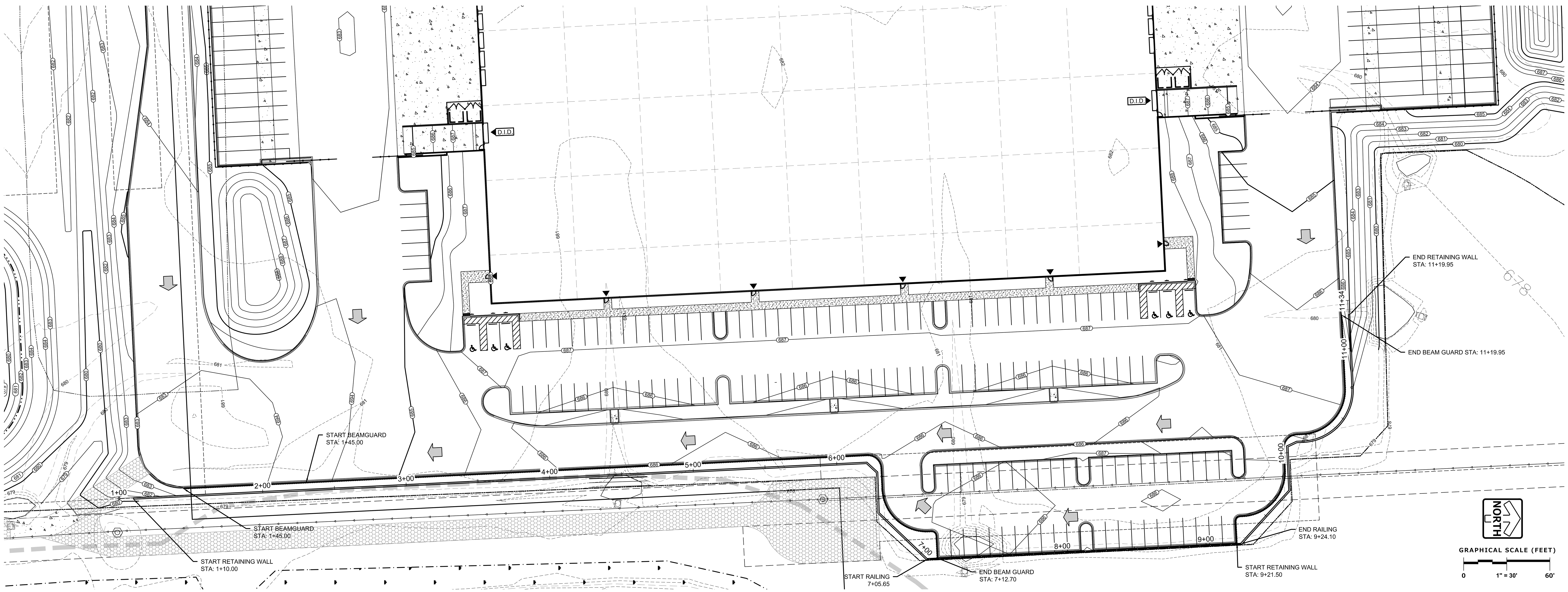

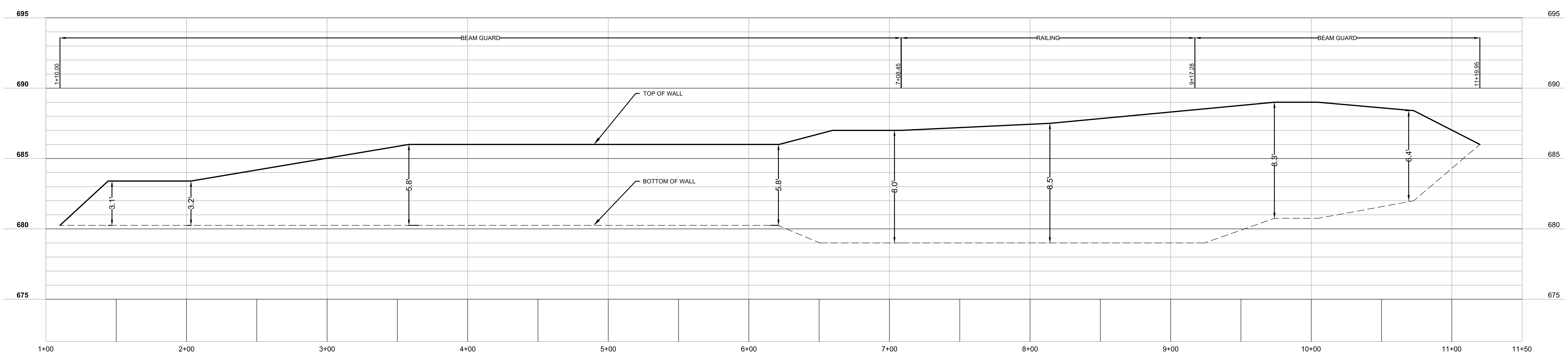

DRAFTED: DC
DESIGNED: AS
REVIEWED: MC

PLAN I DESIGN I DELIVER
www.pinnacle-engr.com

PINNACLE ENGINEERING GROUP
ENGINEERING I NATURAL RESOURCES I SURVEYING

WISCONSIN OFFICE:
15850 W. BLUEMOUND ROAD
BROOKFIELD, WI 53005
(262) 754-8888
CHICAGO I MILWAUKEE : NATIONWIDE

This Document, Either as Drawing or the Assemblage of Electronic Data, is the Property of Commerce Construction Co., L.P. ("Commerce")
... without the written consent of Commerce. ... without warranty of any kind either expressed or implied. ... and completeness. Commerce is not responsible for ... document. The acceptance or use of this document will ...

MAC	ADDR		
MAC	ADDR		
MAC	ADDR		
MAC			
		DATE	REVISION

CTH "H" ...

DRA... DATE
P...,LLC

CCC
...A

C...

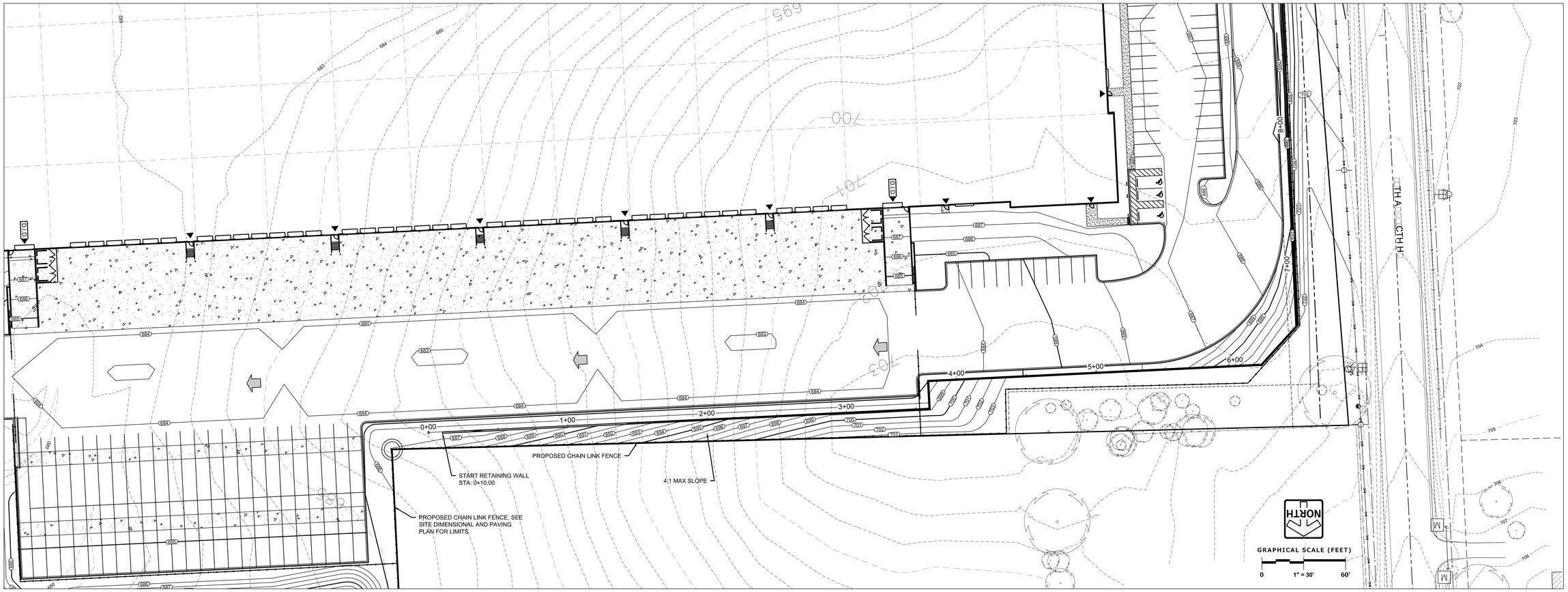

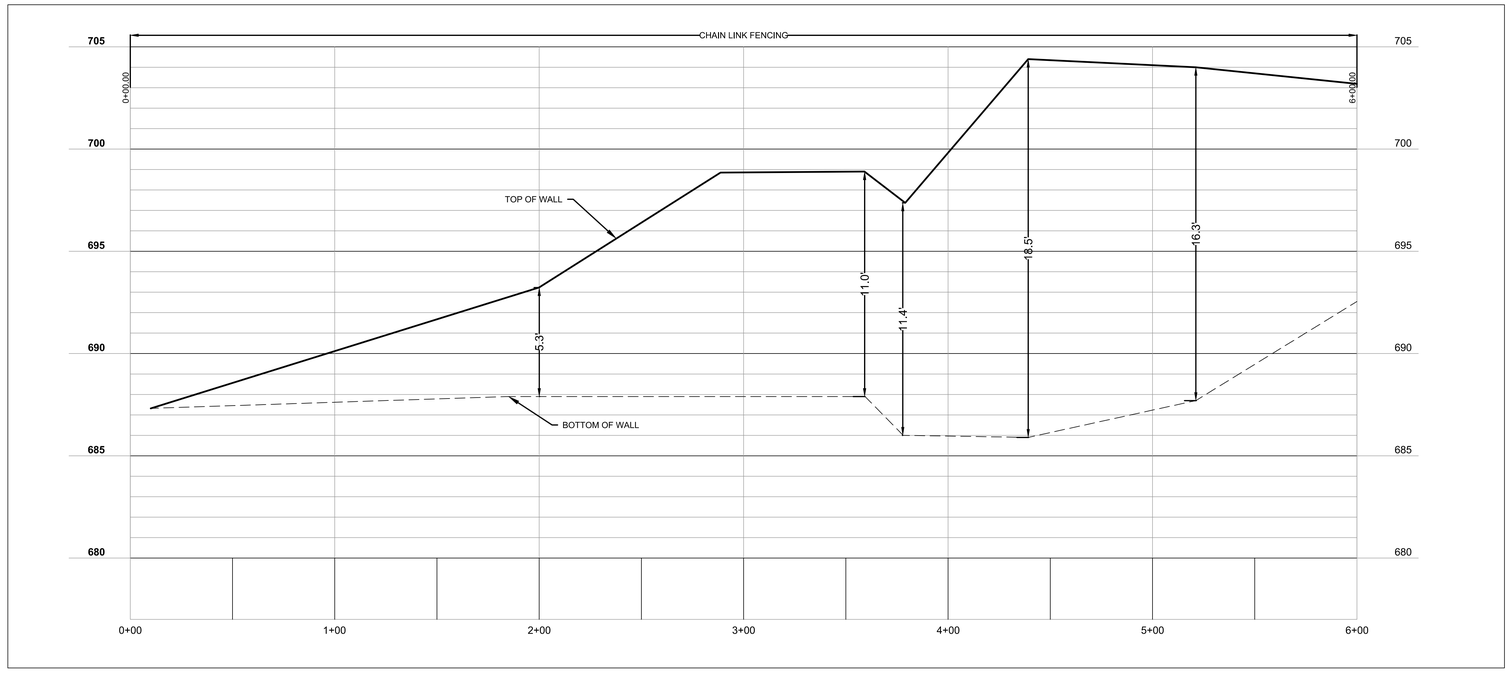

PLAN I DESIGN I DELIVER
www.pinnacle-engr.com

PINNACLE ENGINEERING GROUP
ENGINEERING I NATURAL RESOURCES I SURVEYING

WISCONSIN OFFICE:
15850 W. BLUEMOUND ROAD
BROOKFIELD, WI 53005
(262) 754-8888
CHICAGO I MILWAUKEE - NATIONWIDE

DRAFTED: DC
DESIGNED: AS
REVIEWED: MC

R TAI ALL PR IL
IMPR M T PLA R
MA TIC AD R L TIC C T R
CTH "H" ILLA PL A T PRAIRIE, I

DRA DAT
P,LLC
CCC
A
H T
C

DAT
R
DAT
R
ID T
ADDR ILLA C MM
ADDR ILLA C MM
ADDR ILLA C MM
MAC
MAC
MAC
MAC

C MM RC C TR CTI C L P
Cr ad Par a nh
Cli Indu tri Cali mia
Tele h ne
Licen e

The Document, Either as Drawing or the Assemblage of Drawings, Is Property of Pinnacle Construction Co., L.P. ("Contractor")
Contractor has not authorized, and does not authorize, any third party to use, reproduce, or modify the Document or any part thereof without express written consent of Contractor. Contractor's consent may be withheld in its sole and absolute discretion. Contractor's consent, if granted, shall be in writing and may be conditioned on payment of a fee or royalty. Any such use, reproduction or modification by third parties without Contractor's consent is at such third party's sole risk and Contractor shall have no liability for such use.

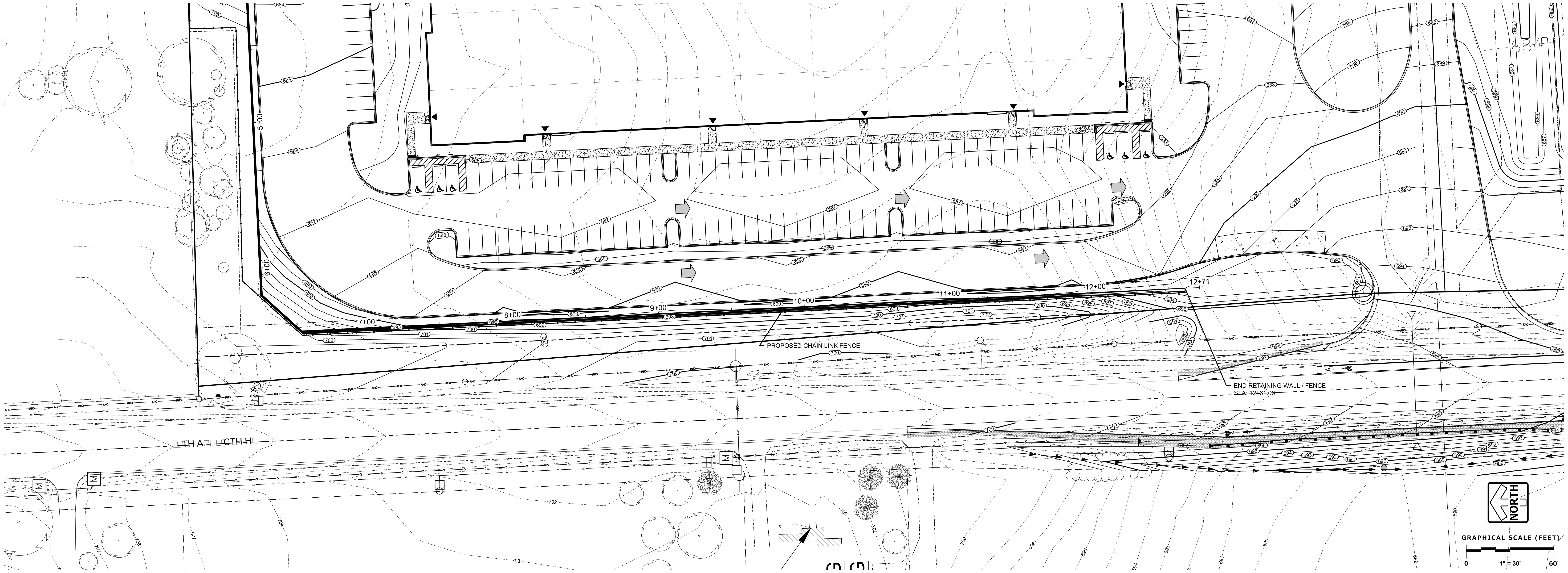

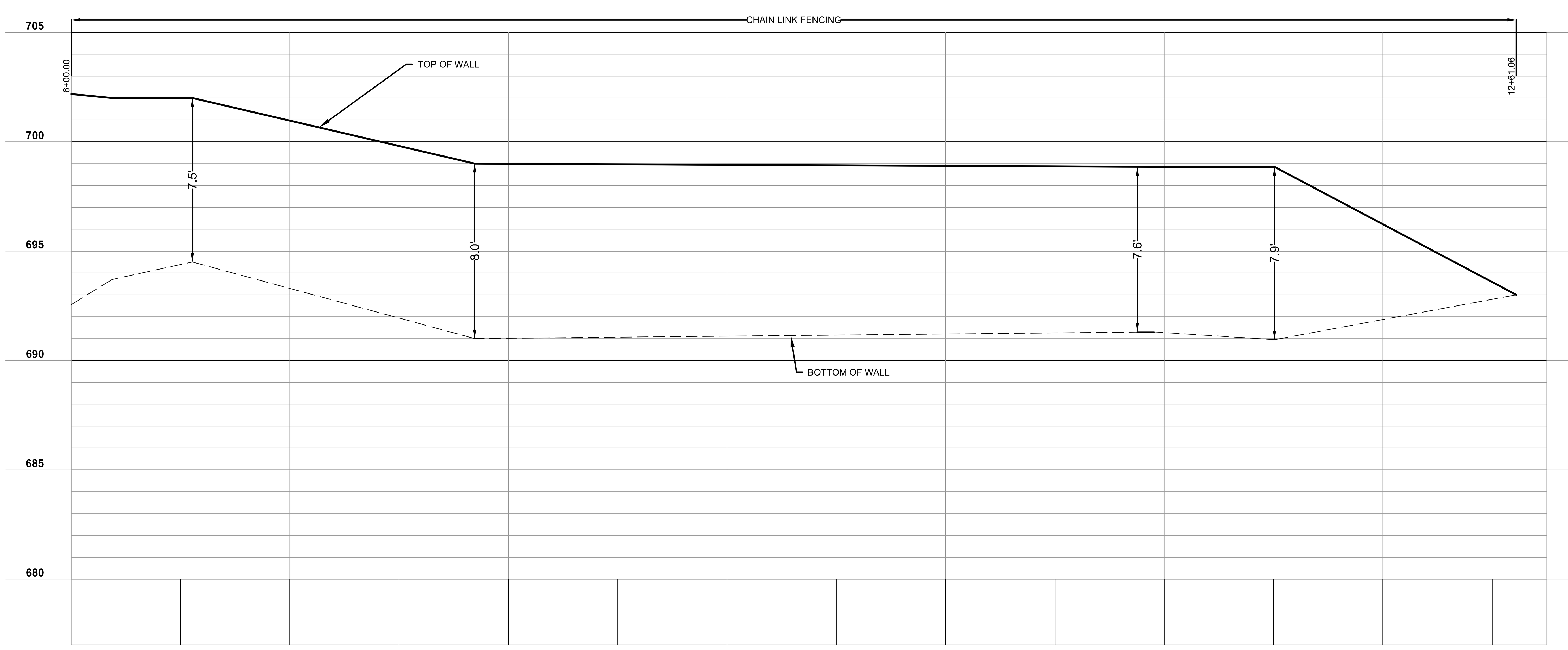

DRAFTED: DC
DESIGNED: AS
REVIEWED: MC

PLAN I DESIGN I DELIVER
www.pinnacle-engr.com

PINNACLE ENGINEERING GROUP
ENGINEERING I NATURAL RESOURCES I SURVEYING

WISCONSIN OFFICE:
15850 W. BLUEMOUND ROAD
BROOKFIELD, WI 53005
(262) 754-8888
CHICAGO I MILWAUKEE : NATIONWIDE

This Document, Either as Drawing or the Assemblage of Electronic Data, is the Property of Commerce Construction Co., L.P. ("Commerce")

R		DATE
ADDR	MAC	
ADDR	MAC	
ADDR	MAC	

COMMERCE CONSTRUCTION CO., L.P.
City of Industry, California

RETAINING WALL PROFILE
MAJESTIC LOGISTICS CENTER
CTH "H" VILLAGE OF PLEASANT PRAIRIE, WI

DRAWN BY: P, LLC
CCC
A
SHEET
C

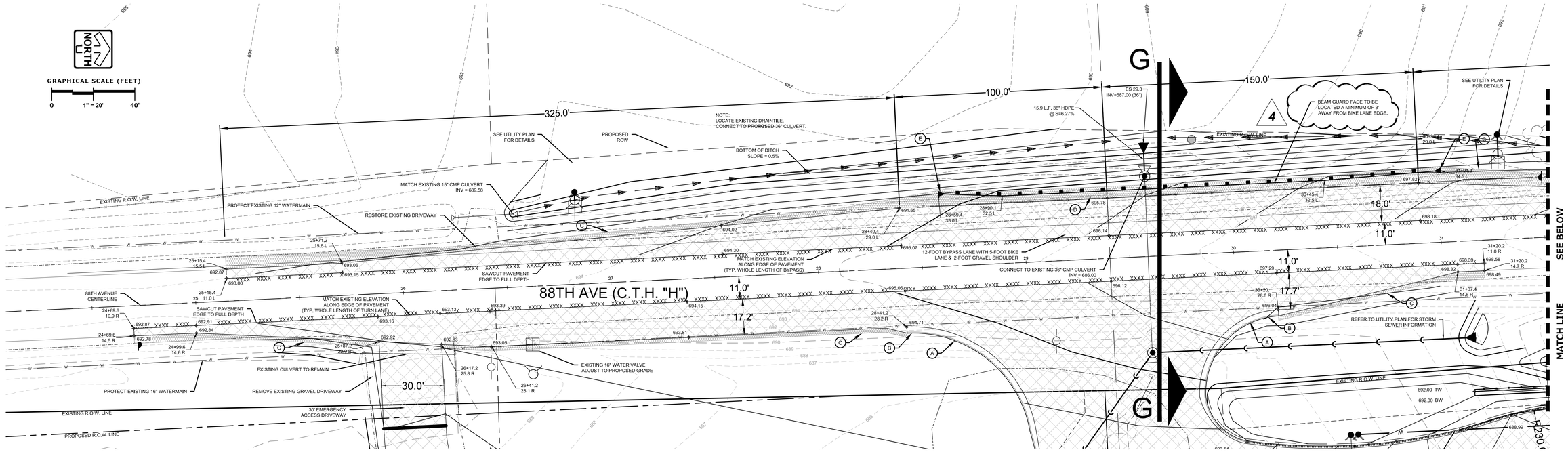

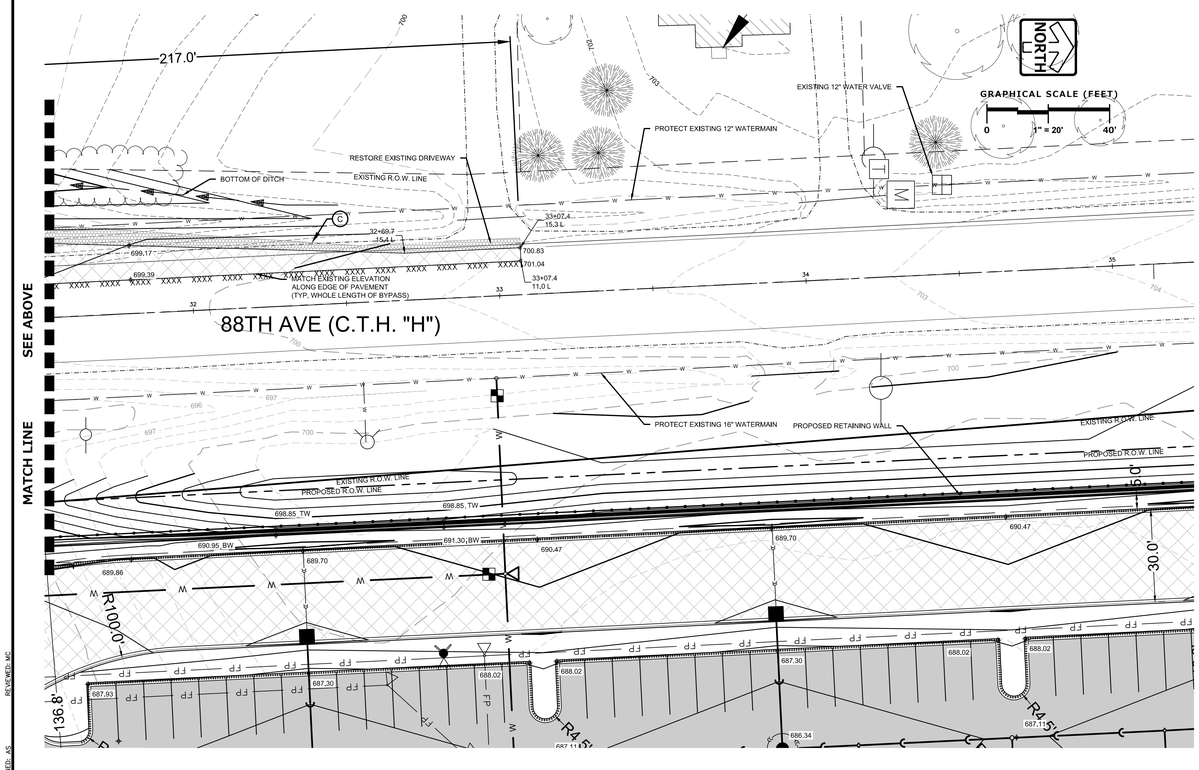

LEGEND

- HMA PAVEMENT
  -2" HMA TYPE 3 OVERLAY
- (A) 30" CONCRETE CURB & GUTTER (WISDOT TYPE J, 6" SLOPED)
- (B) END SECTION CURB & GUTTER WISDOT SSD 8D4
- (C) EDGE OF GRAVEL SHOULDER
- (D) MIDWEST GUARDRAIL SYSTEM (MGS), TYPE K (SEE WISDOT DETAILS)
- (E) MIDWEST GUARDRAIL SYSTEM (MGS) TERMINAL (SEE WISDOT DETAILS)
- XXXX FULL DEPTH SAW CUT

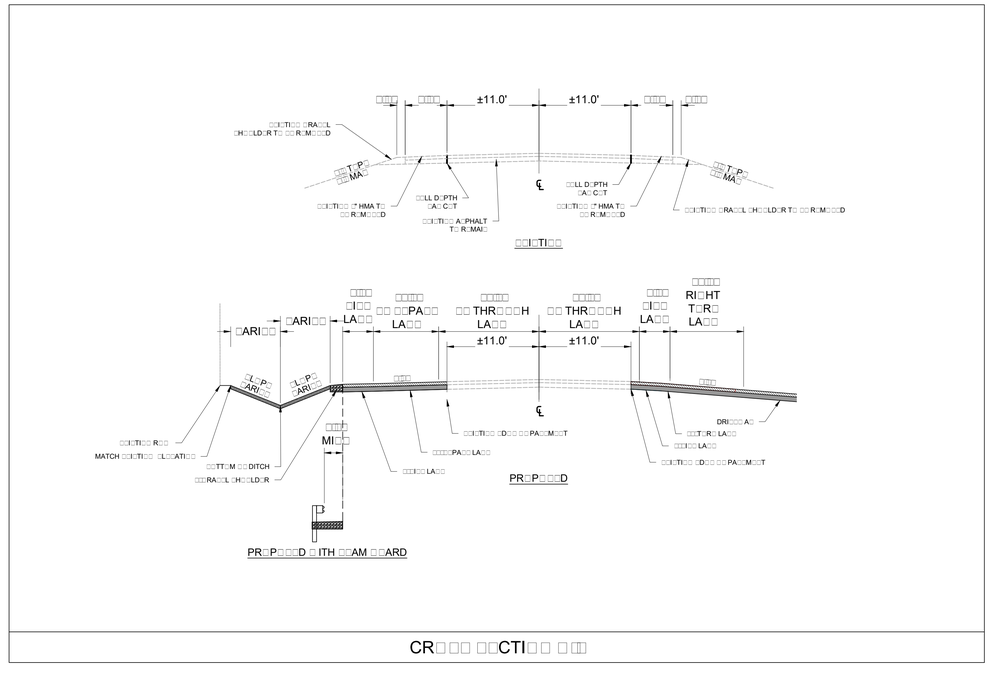

CROSS SECTIONS

PINNACLE ENGINEERING GROUP
ENGINEERING I NATURAL RESOURCES I SURVEYING
PLAN I DESIGN I DELIVER
www.pinnacle-engr.com
WISCONSIN OFFICE:
15850 W. BLUEMOUND ROAD
BROOKFIELD, WI 53005
(262) 754-8888
CHICAGO I MILWAUKEE : NATIONWIDE

CTH H RADI A D DRAI A PLA
RI IMPR M T PLA R
MA TIC AD R L TIC C T R
CTH "H" ILLA PL A T PRARIE, I

DRAFTED: DC
DESIGNED: AS
REVIEWED: MC

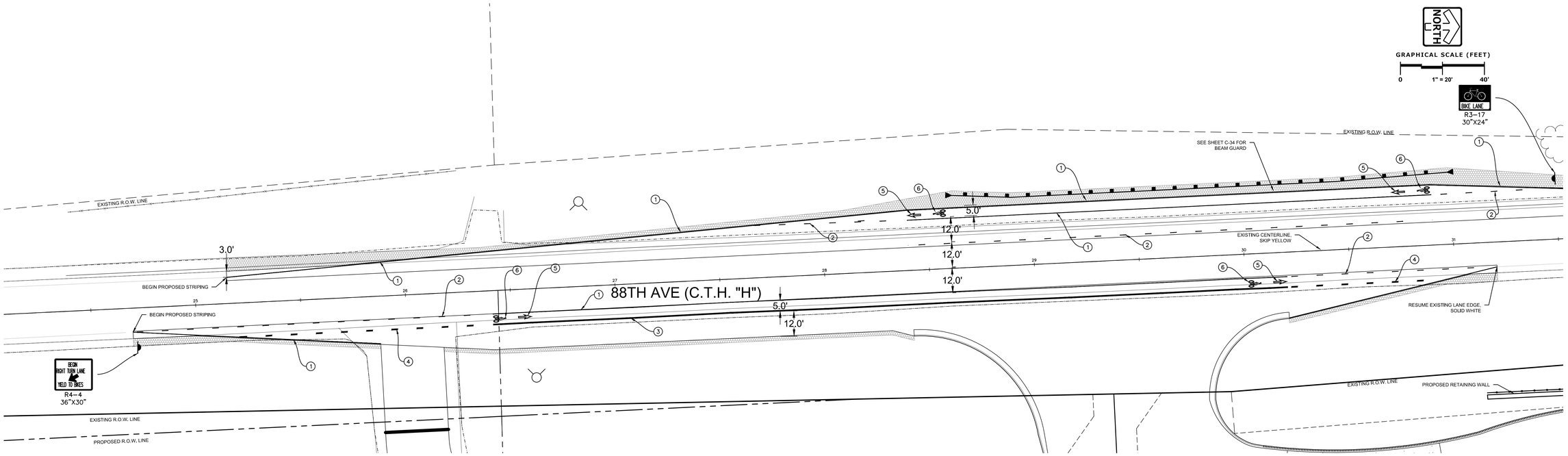

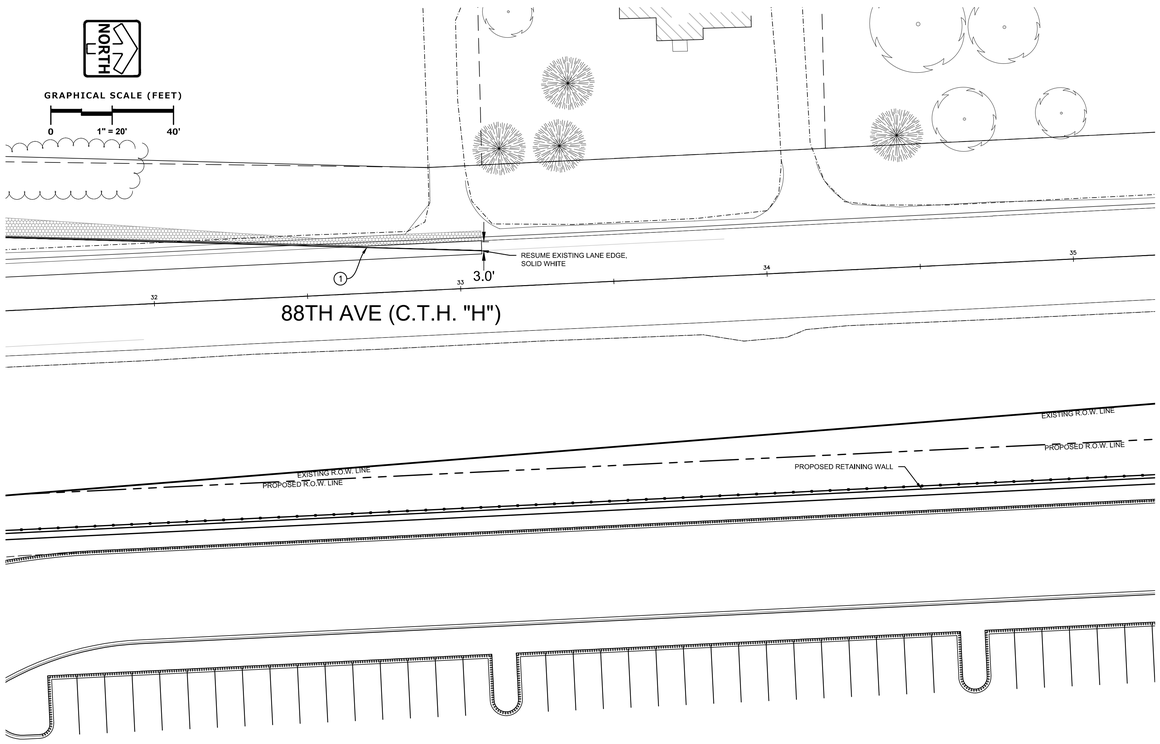

PAVEMENT MARKING LEGEND

1. EPOXY, 4-INCH (SOLID WHITE)
2. EPOXY, 4-INCH, 3' LINE, 9' GAP (SOLID WHITE)
3. EPOXY, 8-INCH (SOLID WHITE)
4. EPOXY, 8-INCH, 3' LINE, 9' GAP (SOLID WHITE)
5. ARROWS, EPOXY, BIKE LANE (WHITE)
6. SYMBOL, EPOXY, BIKE LANE (WHITE)

NOTES

1. CONTRACTOR SHALL CONSULT STRIPING COLOR WITH OWNER PRIOR TO CONSTRUCTION.
2. PROVIDE CONTRACTOR GRADE ACRYLIC, STRIPING PAINT FOR NEW ASPHALT OR COATED ASPHALT. APPLY MARKING PAINT AT A RATE OF ONE (1) GALLON PER THREE TO FOUR HUNDRED (300-400) LINEAL FEET OF FOUR (4) INCH WIDE STRIPES OR TO MANUFACTURER'S SPECIFICATION, WHICHEVER IS GREATER.
3. THOROUGHLY CLEAN SURFACES FREE OF DIRT, SAND, GRAVEL, OIL AND OTHER FOREIGN MATTER. CONTRACTOR RESPONSIBLE TO INSPECT EXISTING PAVEMENT SURFACES FOR CONDITIONS AND DEFECTS THAT WILL ADVERSELY AFFECT QUALITY OF WORK, AND WHICH CANNOT BE PUT INTO AN ACCEPTABLE CONDITION THROUGH NORMAL PREPARATORY WORK AS SPECIFIED.
4. DO NOT PLACE MARKING OVER UNSOUND PAVEMENTS. IF THESE CONDITIONS EXIST, NOTIFY OWNER. STARTING INSTALLATION CONSTITUTES CONTRACTOR'S ACCEPTANCE OF SURFACE AS SUITABLE FOR INSTALLATION.
5. LAYOUT MARKINGS USING GUIDE LINES, TEMPLATES AND FORMS. STENCILS AND TEMPLATES SHALL BE PROFESSIONALLY MADE TO INDUSTRY STANDARDS. "FREE HAND" PAINTING OF ARROWS, SYMBOLS, OR WORDING SHALL NOT BE ALLOWED. APPLY STRIPES STRAIGHT AND EVEN.
6. PROTECT ADJACENT CURBS, WALKS, FENCES, AND OTHER ITEMS FROM RECEIVING PAINT.
7. BARRICADE MARKED AREAS DURING INSTALLATION AND UNTIL THE MARKING PAINT IS DRIED AND READY FOR TRAFFIC.
8. REFER TO WISDOT STANDARD DETAIL DRAWINGS 15C8 AND 15C29 FOR MORE INFORMATION PERTAINING TO BYPASS LANE AND RIGHT-TURN LANE STRIPING.

"THE INFORMATION SHOWN ON THIS DRAWING CONCERNING TYPE AND LOCATION OF UNDERGROUND UTILITIES IS NOT GUARANTEED TO BE ACCURATE OR ALL INCLUSIVE. THE CONTRACTOR IS RESPONSIBLE FOR MAKING HIS OWN DETERMINATIONS AS TO THE TYPE AND LOCATION OF UNDERGROUND UTILITIES AS MAY BE NECESSARY TO AVOID DAMAGE THERETO. IF ADDITIONAL UTILITIES ARE KNOWN TO EXIST IN THE PROPERTY, THE OWNER WILL PROVIDE EXISTING PLANS OF OTHER UTILITIES SERVING THE SITE AND THE BUILDING THAT OTHERWISE CANNOT BE LOCATED BY A VISUAL OBSERVATION OF THE PROPERTY OR OF WHICH THE SURVEYOR WOULD HAVE NO KNOWLEDGE".

PLAN I DESIGN I DELIVER
www.pinnacle-engr.com
PINNACLE ENGINEERING GROUP
ENGINEERING I NATURAL RESOURCES I SURVEYING
WISCONSIN OFFICE:
15850 W. BLUEMOUND ROAD
BROOKFIELD, WI 53005
(262) 754-8888
CHICAGO I MILWAUKEE : NATIONWIDE

This Document, Either as Drawing or the Assembling of Data Contained Herein, Is the Property of Construction Co. L.P. ("Consultant").
Consultant's Ownership Rights in the Document, Whether in Hard Copy Or Electronic Form, Is Not Subject to Any Claim of Ownership Or Right by Any Other Person or Entity. Consultant Retains Its Ownership Rights in the Document, Including Its Right to Reuse the Information Contained in the Document, Without the Written Consent of Consultant. This Document Is Provided "As Is" and Consultant Makes No Representations or Warranties Of Any Kind, Express or Implied, Including Without Limitation, Any Implied Warranty of Fitness for a Particular Purpose or Merchantability. Consultant Shall Not Be Liable for Any Loss or Damage Arising Out of or Resulting from Any Reuse of the Document or Any Data Contained in the Document Prepared by Consultant, Including Any Loss of Profits, Business Interruption, or Loss of Data. No Other Person or Entity Is Entitled to Rely on the Document or Any Data Contained in the Document Prepared by Consultant Without the Express Written Consent of Consultant.

				DAT
				R
				DAT
				R

	MAC	
	MAC	
	MAC	
	MAC	

	ID T	
	ADDR ILLA C MM T	
	ADDR ILLA C MM T	
	ADDR ILLA C MM T	
	R	

C MM RC C TR CT C LP
Cr Tr ad Par rth
th
Cit hou tr Cali mia
Tele h ne
Licen e

CTH H PA M T MAR IL D A D IL A PLA
R IMPR M T PLA R
MA TIC AD R L TIC C T R
CTH "H" ILLA PL A T PRAIRIE, I

Dra In Pl t ar
0 1
If this bar is not 1" in size, the drawing has been reduced or enlarged from original plans. Adjust scale accordingly.

DRA DAT
P LLC

CCC
A

HOT
C

REVIEWED: MC
DESIGNED: AS
DRAFTED: DC

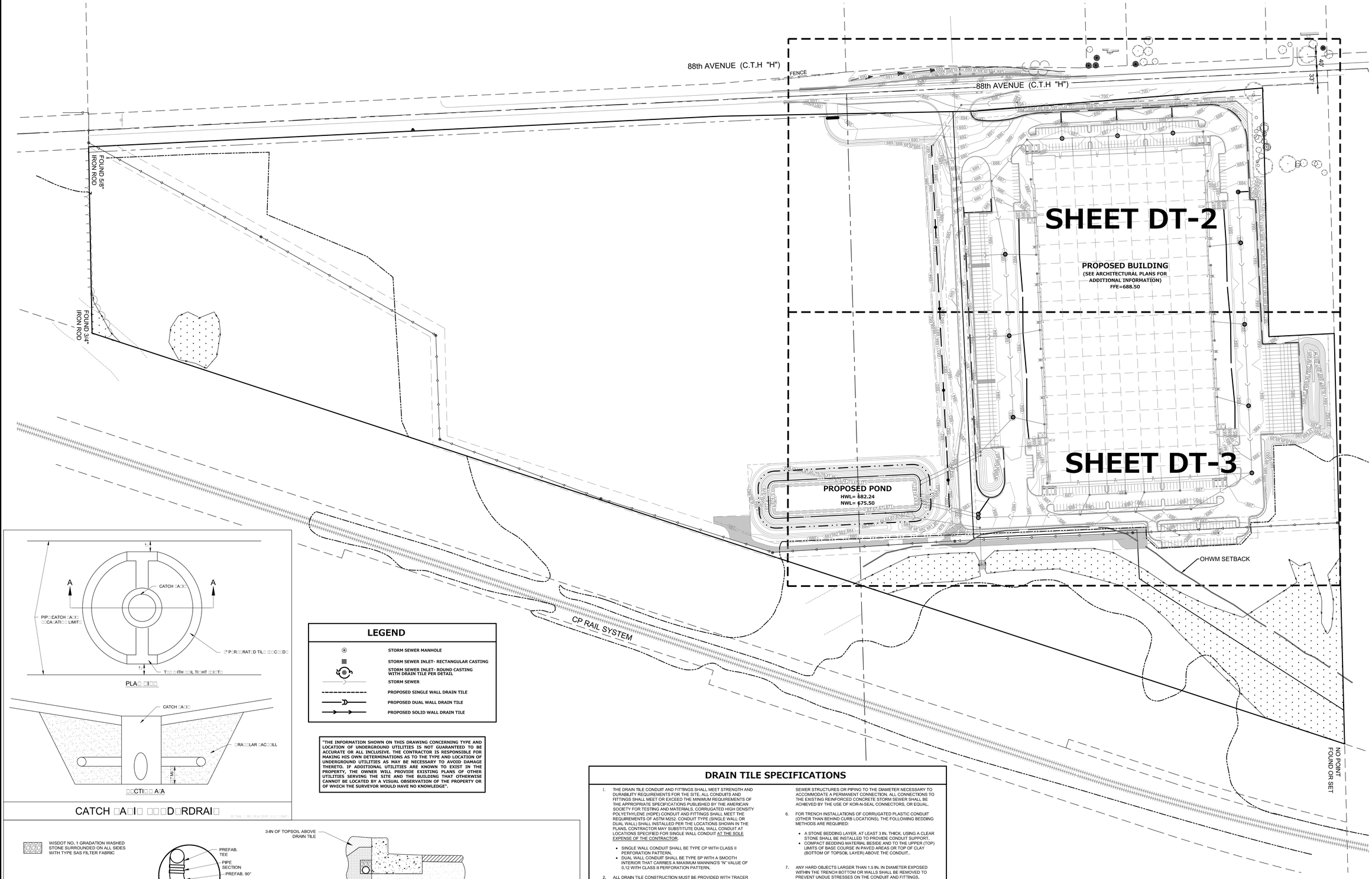

CATCH □A□□ □□□D□RDRAI□

LEGEND

- STORM SEWER MANHOLE
- STORM SEWER INLET- RECTANGULAR CASTING
- STORM SEWER INLET- ROUND CASTING WITH DRAIN TILE PER DETAIL
- STORM SEWER
- PROPOSED SINGLE WALL DRAIN TILE
- PROPOSED DUAL WALL DRAIN TILE
- PROPOSED SOLID WALL DRAIN TILE

"THE INFORMATION SHOWN ON THIS DRAWING CONCERNING TYPE AND LOCATION OF UNDERGROUND UTILITIES IS NOT GUARANTEED TO BE ACCURATE OR ALL INCLUSIVE. THE CONTRACTOR IS RESPONSIBLE FOR MAKING HIS OWN DETERMINATIONS AS TO THE TYPE AND LOCATION OF UNDERGROUND UTILITIES AS MAY BE NECESSARY TO AVOID DAMAGE THERETO. IF ADDITIONAL UTILITIES ARE KNOWN TO EXIST IN THE PROPERTY, THE OWNER WILL PROVIDE EXISTING PLANS OF OTHER UTILITIES SERVING THE SITE AND THE BUILDING THAT OTHERWISE CANNOT BE LOCATED BY A VISUAL OBSERVATION OF THE PROPERTY OR OF WHICH THE SURVEYOR WOULD HAVE NO KNOWLEDGE".

DRAIN TILE SPECIFICATIONS

1. THE DRAIN TILE CONDUIT AND FITTINGS SHALL MEET STRENGTH AND DURABILITY REQUIREMENTS FOR THE SITE. ALL CONDUITS AND FITTINGS SHALL MEET OR EXCEED THE MINIMUM REQUIREMENTS OF THE APPROPRIATE SPECIFICATIONS PUBLISHED BY THE AMERICAN SOCIETY FOR TESTING AND MATERIALS. CORRUGATED HIGH DENSITY POLYETHYLENE (HDPE) CONDUIT AND FITTINGS SHALL MEET THE REQUIREMENTS OF ASTM M252. CONDUIT TYPE (SINGLE WALL OR DUAL WALL) SHALL INSTALLED PER THE LOCATIONS SHOWN IN THE PLANS. CONTRACTOR MAY SUBSTITUTE DUAL WALL CONDUIT AT LOCATIONS SPECIFIED FOR SINGLE WALL CONDUIT AT THE SOLE EXPENSE OF THE CONTRACTOR.
   - SINGLE WALL CONDUIT SHALL BE TYPE CP WITH CLASS II PERFORATION PATTERN.
   - DUAL WALL CONDUIT SHALL BE TYPE SP WITH A SMOOTH INTERIOR THAT CARRIES A MAXIMUM MANNING'S "N" VALUE OF 0.12 WITH CLASS II PERFORATION PATTERN.
2. ALL DRAIN TILE CONSTRUCTION MUST BE PROVIDED WITH TRACER WIRE OR OTHER APPROVED METHODS IN ORDER TO BE LOCATED IN ACCORD WITH 182.0715(2R) OF THE STATUTES. CONTRACTOR SHALL PROVIDE THE ENGINEER NOTICE OF LOCATION METHOD PRIOR TO THE START OF CONSTRUCTION.
3. A MAXIMUM TRENCH WIDTH OF 2-FT SHALL BE MAINTAINED FOR ALL DRAIN TILE INSTALLATION WITH THE EXCEPTION OF CONNECTION POINTS TO THE EXISTING STORM SEWER SYSTEM IN WHICH CASE THE CONTRACTOR SHALL LIMIT DISTURBANCE AS POSSIBLE.
4. THE MINIMUM DEPTH OF COVER (FINISH GRADE TO TOP PIPE) SHALL BE:
   - CONCRETE PAVED AREAS - 2.0-FT
   - ASPHALT PAVED AREAS - 2.5-FT
   - BEHIND CURB - 0.5-FT
   - OTHER LANDSCAPED/GRASS/PERVIOUS AREAS - 2.0-FT
5. CONNECTION TO THE EXISTING STORM SEWER SYSTEM SHALL ACHIEVED BY CORING THE EXISTING REINFORCED CONCRETE STORM SEWER STRUCTURES OR PIPING TO THE DIAMETER NECESSARY TO ACCOMMODATE A PERMANENT CONNECTION. ALL CONNECTIONS TO THE EXISTING REINFORCED CONCRETE STORM SEWER SHALL BE ACHIEVED BY THE USE OF KOR-N-SEAL CONNECTORS, OR EQUAL.
6. FOR TRENCH INSTALLATIONS OF CORRUGATED PLASTIC CONDUIT (OTHER THAN BEHIND CURB LOCATIONS), THE FOLLOWING BEDDING METHODS ARE REQUIRED:
   - A STONE BEDDING LAYER, AT LEAST 3 IN. THICK, USING A CLEAR STONE SHALL BE INSTALLED TO PROVIDE CONDUIT SUPPORT.
   - COMPACT BEDDING MATERIAL BESIDE AND TO THE UPPER (TOP) LIMITS OF BASE COURSE IN PAVED AREAS OR TOP OF CLAY (BOTTOM OF TOPSOIL LAYER) ABOVE THE CONDUIT..
7. ANY HARD OBJECTS LARGER THAN 1.5 IN. IN DIAMETER EXPOSED WITHIN THE TRENCH BOTTOM OR WALLS SHALL BE REMOVED TO PREVENT UNDUE STRESSES ON THE CONDUIT AND FITTINGS.
8. PRE MANUFACTURED FITTINGS (SUCH AS: WYES, TEES, BENDS, CAPS, ETC) OF THE SAME MATERIAL AS THE CONDUIT SHALL BE USED AT ALL CONNECTIONS AND DEFLECTIONS GREATER THAN 22.5 DEGREES.
9. IF NOT CONNECTED TO A STRUCTURE, THE UPPER END OF EACH SUBSURFACE DRAIN TILE SHALL BE CAPPED WITH A TIGHT-FITTING EXTERNAL CAP OF THE SAME MATERIAL AS THE CONDUIT.
10. AT ALL TIMES THE DRAIN TILE SYSTEM SHALL BE KEPT CLEAN AND PROTECTED AGAINST UNDERMINING OF THE CAPACITY OF THE CONDUIT AND DAMAGE DURING CONSTRUCTION. TYPICAL CAPACITY UNDERMINING INCLUDES ENTRY OF CONSTRUCTION MATERIALS, TRASH, AND RODENTS INTO THE CONDUIT.

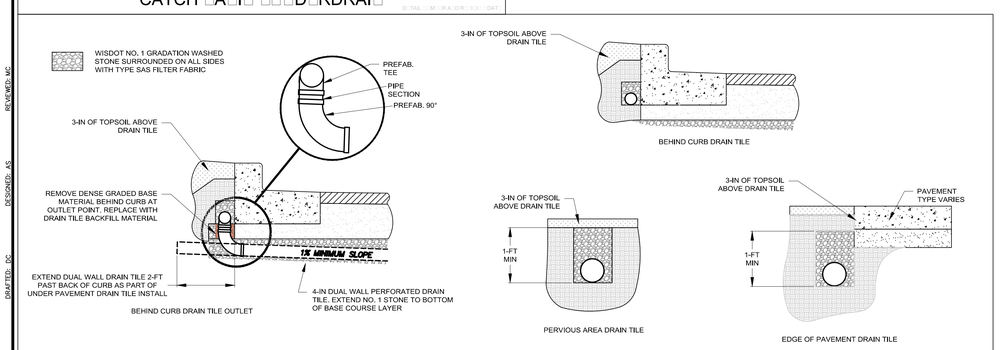

DRAI□TIL□

REVIEWED: MJC
DESIGNED: AS
DRAFTED: DC

PLAN | DESIGN | DELIVER
www.pinnacle-engr.com

PINNACLE ENGINEERING GROUP
ENGINEERING | NATURAL RESOURCES | SURVEYING
P□□ □□ □□ □□□□□□□A

WISCONSIN OFFICE:
15850 W. BLUEMOUND ROAD
BROOKFIELD, WI 53005
(262) 754-8888
CHICAGO | MILWAUKEE | NATIONWIDE

This Documents, Either as Drawing or the Assemblage of Specifications, Is the Property of Commercial Construction Co. L.P. ("Commercial") and Is Not Transferable to Any Other Persons or Entities. Reuse, in Whole or in Part, Without Express Written Consent of Commercial, Is Illegal. Violators Will Be Prosecuted. Commercial Retains Its Ownership Rights Regardless of Any Claim of Ownership Based on Payment for Services Rendered. Any Such Claim Must Be Established by Express Written Agreement Signed by Commercial.

				DAT□
				R□
	MAC			DAT□
	MAC			R□
	MAC			
	MAC			
	MAC		

LEGEND

Symbol	Description
⊙	STORM SEWER MANHOLE
■	STORM SEWER INLET- RECTANGULAR CASTING
	STORM SEWER INLET- ROUND CASTING WITH DRAIN TILE PER DETAIL
	STORM SEWER
- - - -	PROPOSED SINGLE WALL DRAIN TILE
	PROPOSED DUAL WALL DRAIN TILE
	PROPOSED SOLID WALL DRAIN TILE

"THE INFORMATION SHOWN ON THIS DRAWING CONCERNING TYPE AND LOCATION OF UNDERGROUND UTILITIES IS NOT GUARANTEED TO BE ACCURATE OR ALL INCLUSIVE. THE CONTRACTOR IS RESPONSIBLE FOR MAKING HIS OWN DETERMINATIONS AS TO THE TYPE AND LOCATION OF UNDERGROUND UTILITIES AS MAY BE NECESSARY TO AVOID DAMAGE THERETO. IF ADDITIONAL UTILITIES ARE KNOWN TO EXIST IN THE PROPERTY, THE OWNER WILL PROVIDE EXISTING PLANS OF OTHER UTILITIES SERVING THE SITE AND THE BUILDING THAT OTHERWISE CANNOT BE LOCATED BY A VISUAL OBSERVATION OF THE PROPERTY OR OF WHICH THE SURVEYOR WOULD HAVE NO KNOWLEDGE".

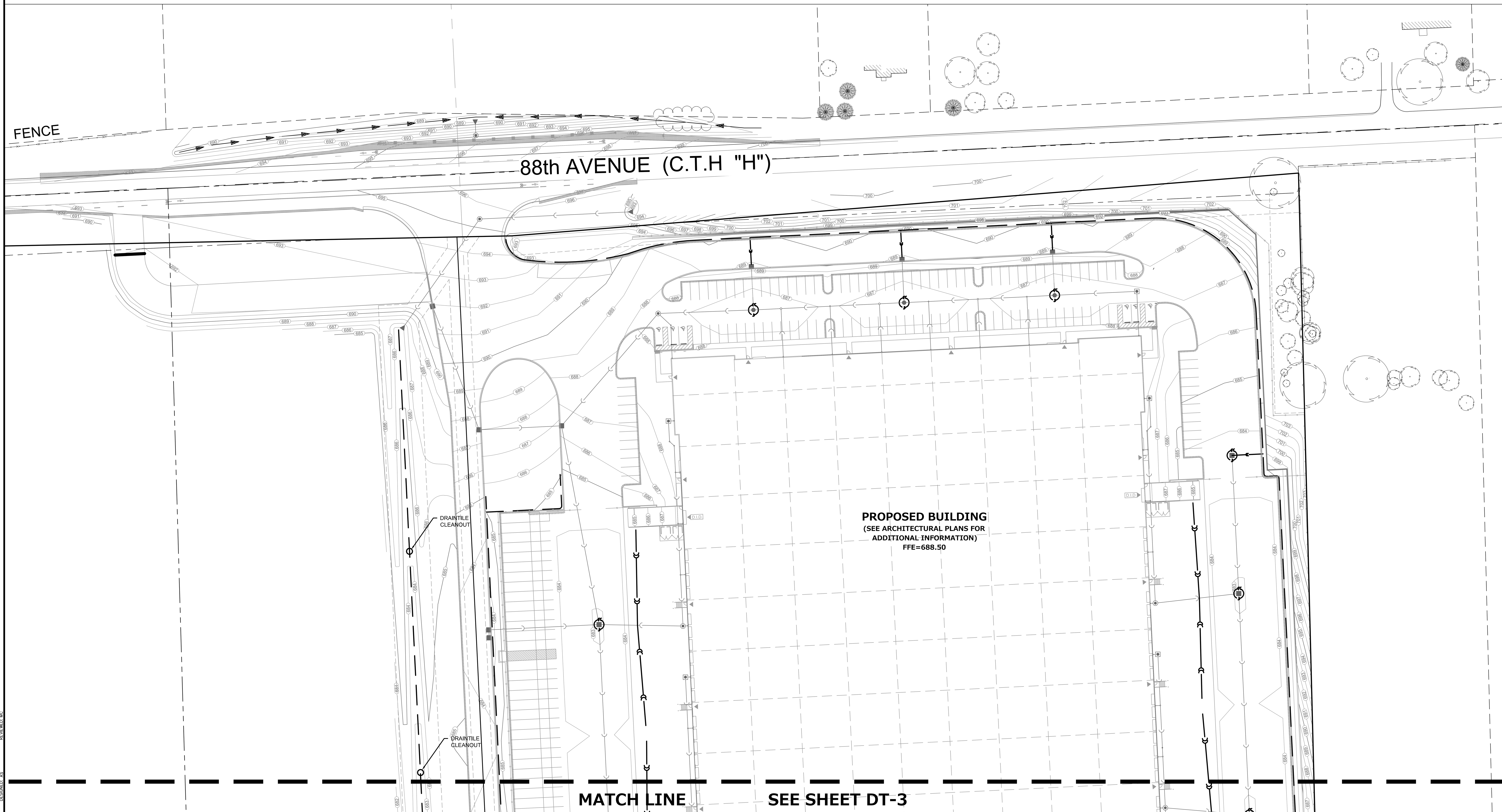

NORTH

GRAPHICAL SCALE (FEET)

0 1" = 40' 80'

REVIEWED: MC

DESIGNED: AS

DRAFTED: DC

PLAN I DESIGN I DELIVER

www.pinnacle-engr.com

PINNACLE ENGINEERING GROUP

ENGINEERING I NATURAL RESOURCES I SURVEYING

WISCONSIN OFFICE:
15850 W. BLUEMOUND ROAD
BROOKFIELD, WI 53005
(262) 754-8888
CHICAGO I MILWAUKEE : NATIONWIDE

This Document, Either as Drawing or the Assemblage of Electronic Data, is the Property of Commerce Construction Co., L.P. ("Commerce")

without the written consent of Commerce. This document ... without warranty of any kind either expressed or implied. ... and completeness. Commerce is not responsible for ... document. The acceptance or use of this document will ...

ADDR...	...ILLA... COMM...T...	MAC	
ADDR...	...ILLA... COMM...T...	MAC	
ADDR...	...ILLA... COMM...T...	MAC	
R...I...I...			DAT...

C...MM...RC... C...TR...CTI... C..., L.P.

Telephone

License

...TILIT... DRAI... TIL... PLA...

...I...RI... IMPR...M...T... PLA... ...R

MA...TIC ...AD...R L...I...TIC... C...T...R

CTH "H" ...ILLA... PL...A...T PRAIRI..., ...I

DRA... DAT...

P..., LLC

CCC

A

...H...T

DT...

LEGEND

- STORM SEWER MANHOLE
- STORM SEWER INLET- RECTANGULAR CASTING
- STORM SEWER INLET- ROUND CASTING WITH DRAIN TILE PER DETAIL
- STORM SEWER
- PROPOSED SINGLE WALL DRAIN TILE
- PROPOSED DUAL WALL DRAIN TILE
- PROPOSED SOLID WALL DRAIN TILE

"THE INFORMATION SHOWN ON THIS DRAWING CONCERNING TYPE AND LOCATION OF UNDERGROUND UTILITIES IS NOT GUARANTEED TO BE ACCURATE OR ALL INCLUSIVE. THE CONTRACTOR IS RESPONSIBLE FOR MAKING HIS OWN DETERMINATIONS AS TO THE TYPE AND LOCATION OF UNDERGROUND UTILITIES AS MAY BE NECESSARY TO AVOID DAMAGE THERETO. IF ADDITIONAL UTILITIES ARE KNOWN TO EXIST IN THE PROPERTY, THE OWNER WILL PROVIDE EXISTING PLANS OF OTHER UTILITIES SERVING THE SITE AND THE BUILDING THAT OTHERWISE CANNOT BE LOCATED BY A VISUAL OBSERVATION OF THE PROPERTY OR OF WHICH THE SURVEYOR WOULD HAVE NO KNOWLEDGE".

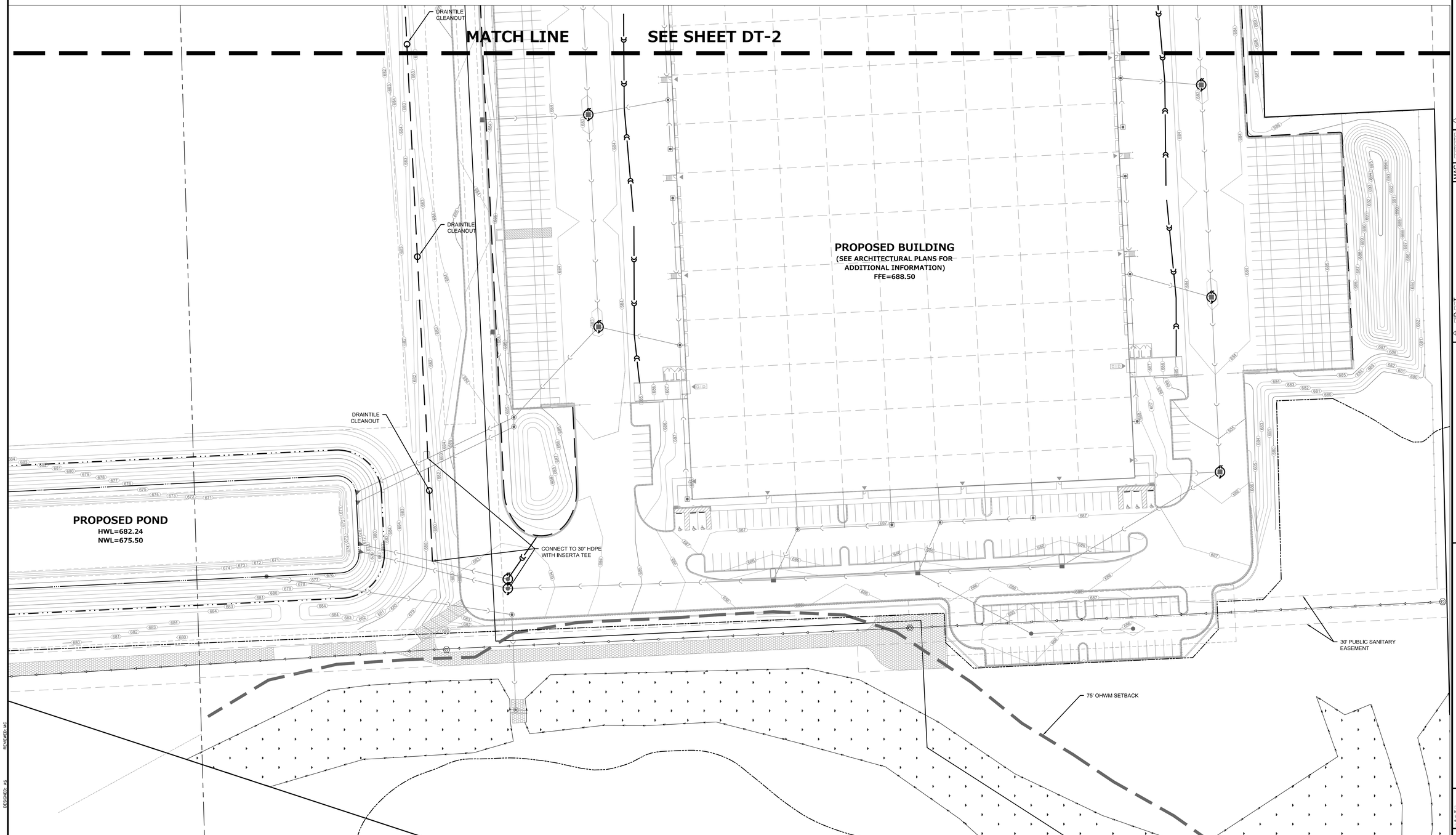

NORTH

GRAPHICAL SCALE (FEET)

0 1" = 40' 80'

PLAN I DESIGN I DELIVER
www.pinnacle-engr.com

PINNACLE ENGINEERING GROUP
ENGINEERING I NATURAL RESOURCES I SURVEYING

WISCONSIN OFFICE:
15850 W. BLUEMOUND ROAD
BROOKFIELD, WI 53005
(262) 754-8888
CHICAGO I MILWAUKEE : NATIONWIDE

P□□ □□□ □□□□□□□□A

REVIEWED: MC
DESIGNED: AS
DRAFTED: DC

This Document, Either as Drawing or the Assembling of Drawings, Is the Property of Construction Co. L.P. ("Contractor") and Is Protected by Copyright and Other Laws and Treaties. It Is Not Permitted to Be Reproduced, Used, Or Disclosed to Others Without the Written Consent of Contractor. This Document Is Also Protected Under Trade Secret Laws as Well as Other Laws Prohibiting Its Use for Any Purpose Other than Its Intended Purpose. Any Such Use Without Contractor's Express Written Consent Is Prohibited and Will Be Prosecuted to the Fullest Extent of the Law.

			DAT□
			R□
MAC			DAT□
MAC			
MAC			
MAC			
			R□

□D □T
ADDR□ □□ □ILLA□ C□MM□T□
ADDR□ □□ □ILLA□ C□MM□T□
ADDR□ □□ □ILLA□ C□MM□T□
ADDR□ □□ □ILLA□ C□MM□T□

C□MM□RC□ C□□□TR□CTI□ □ C□□LP□
□□□□ Cr□□rad□Par□□a□□rth
□□th □□□r
Cit□ □Indu□tr□, Cali□mia □□□□□□□
Tele□h□ne □□□□□□□□□□
Licen□e □□□□□□□□

□TILIT□ DRAI□ TIL□ PLA□
□□□I□□□RI□□ IMPR□□□M□□T□ PLA□□ □□R
MA□□□TIC □AD□□R L□□I□TIC□C□□T□R
CTH "H" □ILLA□□□ PL□A□A□T PRAIR□□ □ I

Dra□in□ Pl□t □ar
□□a□ th□ □□□ar t□ □□h□□ dra□in□ ha□ n□t □een reduced □r enlarged □□ □□ □□inal □□ th□ □□□ar □□ n□t □□ad□ □□□□h □□□ the □□□□al □□a □□dra□in□ ha□ □hanged

DRA□ □ □□ DAT□
P□□,LLC

CCC □□□ □□□
□□□□□□A

□H□□T □□□

DT□□

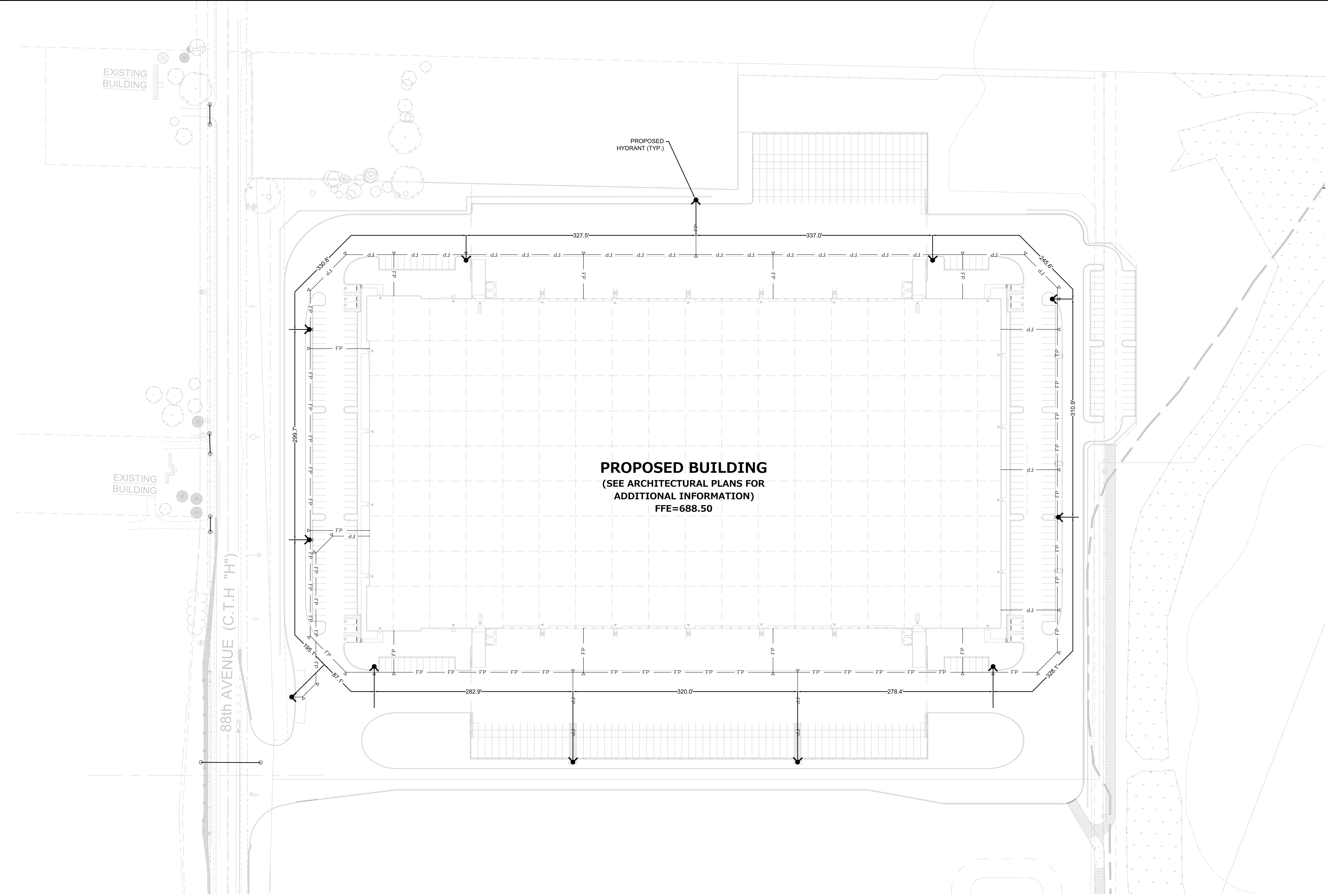

NORTH

GRAPHICAL SCALE (FEET)

0 1" = 50' 100'

PLAN I DESIGN I DELIVER
www.pinnacle-engr.com

PINNACLE ENGINEERING GROUP
ENGINEERING I NATURAL RESOURCES I SURVEYING

WISCONSIN OFFICE:
15850 W. BLUEMOUND ROAD
BROOKFIELD, WI 53005
(262) 754-8888
CHICAGO I MILWAUKEE : NATIONWIDE

DRAFTED: DC DESIGNED: AS REVIEWED: MC

This Document, Either as Drawing or the Assemblage of Electronic Data, is the Property of Commerce Construction Co., L.P. ("Commerce") ... without the written consent of Commerce. This document ... without warranty of any kind either expressed or implied. ... and completeness. Commerce is not responsible for ... document. The acceptance or use of this document will ...

DATE

REVISIONS

DATE

REVISIONS

Telephone

License

CTH "H"

DRA

P, LLC

DATE

CCC

A

C

□□ILDI□□ A
MA□□□TIC □AD□□R L□□I□TIC□ C□□T□R
CTH "H" □ILLA□□ □□ PL□A□A□T PRAIRI□, □ I

A□□R□□IATI□□□

A□□□	A□CH□R □□LT
A□C□	A□PHALT C□□CR□T□
A□C	AIR C□□DITI□□I□□
AC□PLA□□	AC□□□TIC PLA□T□R
AC□T□	AC□□□TIC TIL□
AD□□	AD□AC□□T
AI□C	AM□RICA□ I□□TIT□T□ □□ □T□□L C□□□TR□CTI□□
ALL□□ □	ALL□□ A□L□
ALT□	ALT□R□AT□
AL□M□	AL□MI□□M
ARCHL□	ARCHIT□CT□RAL
A□TM	AM□RICA□ □□CI□T□ □□R T□□TI□□ A□D MAT□RIAL□
A□□□	A□□□□□
□□□□	□□TT□M □□ □□AM
□D□	□□ARD
□LD□□	□□ILDI□□
□L□□	□L□C□
□L□□□	□L□C□I□□
□L□D□	□□□□L□□ARD
□M□	□□AM
□□□□	□□□□DAR□ □AILI□□
□□T□	□□TT□M
□□PL□	□A□□ PLAT□
□R□□	□□ARI□□
□□□□	□□TH □ID□□
□T□ □□	□□T□ □□□
□□□ □	□□TT□M □□ □ ALL
C□□C□	CALI□□R□IA □□□R□□ C□MMI□□I□□
C□M□	C□M□□T
C□R□T□	C□RAMIC TIL□
C□□	CA□T IR□□
C□P□	CA□T□I□□PLAC□
CL□□	C□ILI□□
CLR□	CL□AR
C□□	C□MPA□□
C□L□	C□L□M□
C□MP□	C□MP□□ITI□□
C□□C□	C□□CR□T□
C□□□□	C□□□□CTI□□
C□□□T□	C□□□TR□CTI□□
C□□T□	C□□TI□□□□□
C□□TR□	C□□TRACT□R
C□□□	C□□□T□R□□□□
D□PT□	D□PARTM□□T
D□T□	D□TAIL
D□□□	D□□□LA□ □IR
DIA□	DIAM□T□R
DIM□	DIM□□□I□□
D□□	DITT□
DR□	D□□R
D□□□	D□□ □□P□□T
D□ □□	DRA□ I□□
□□	□A□T
□A□	□ACH
□□□□	□ACH □AC□
□L□	□L□□ATI□□
□L□CT□	□L□CTRICAL
□□□□	□□□□ □AILI□□
□□□R□	□□□□I□□□R
□□□	□□□AL
□□□IP□	□□□IPM□□T
□□□□	□ACH □ID□
□□□ □	□ACH □ A□
□□I□T□	□□I□TI□□
□□P□	□□P□□□D
□□□□	□□PA□□I□□ □□I□T
□□T□	□□T□RI□R
□D□□	□□□□DATI□□
□□□□	□I□I□H □L□□R
□□□□	□I□I□H □RAD□
□H□□ □□□	□LATH□AD □ □□D □CR□□
□I□□	□I□I□H
□L□	□L□□ LI□□
□LR□	□L□□R
□LR□□	□L□□RI□□
□L□H□□	□LA□HI□□
□□□M□	□AC□ □□ MA□□□R□
□□□□	□AC□ □□ □T□D
□RM□□	□RAMI□□
□□□□	□I□I□H □□R□AC□
□T□□	□□□TI□□
□□RR□	□□RRI□□
□A□	□A□□□
□AL□	□ALL□□
□AL□□	□AL□A□I□□D
□□□□	□□□□RAL
□L□	□LA□□
□L□□	□L□□D□LAMI□AT□D □□AM
□LP□	□L□□D□LAMI□AT□D P□RLI□
□L□LAM	□L□□D□LAMI□AT□D
□R□	□RAD□
□□P□	□□P□□M
H□	H□RI□□□TAL
H□□□	H□□□ □I□
H□C□	H□LL□□ C□R□
HDR□	H□AD□R
H□R□	HA□□□R
HT□	H□I□HT
H□M□	H□LL□□ M□TAL
H□R□	H□RI□□□TAL
HRD□ D□	HARD□ □□D
H□□□	HI□H □TR□□□TH
H□□ □HTR□	H□T □ AT□R H□AT□R
I□□□□	I□□□RMATI□□
I□D□	I□□ID□ DIAM□T□R
I□□□L□	I□□□LATI□□
I□T□	I□T□RI□R
IC□□	I□T□R□ATI□□AL C□□□□R□□C□ □□ □□ILDI□□ □□□ICIAL□
□□T□	□□I□T
□T□	□□I□T
LA□□	LA□ □CR□□
LD□R□	L□D□□R
L□□	L□□□
LH□	L□□ H□DR□□□□ □L□CTR□D□
LLH	L□□□ L□□ H□RI□□□TAL
LL□	L□□□ L□□ □□RTICAL
L□C□	L□CATI□□
LT□ T	LI□HT□ □I□HT
MA□□	MA□IM□M
M□□□	MACHI□□ □□LT
M□CH□	M□CHA□ICAL
M□T□	M□TAL
M□□□□	M□□□A□I□□
M□R□	MA□□□ACT□R□R
MI□□	MI□IM□M
MI□C□	MI□C□LLA□□□□□
MLD□□	M□□LDI□□
M□□□	MA□□□R□ □P□□I□□
M□LL□	M□LLI□□
□□	□□RTH
□AT□	□AT□RAL
□□IC□	□□T I□ C□□TRACT
□□T□□	□□T T□ □CAL□
□LR□	□AIL□R
□□□	□□M□□R
□□D□	□□T□ID□ DIAM□T□R
□P□□□	□P□□I□□
□□□A□	□□□IC□ □□ □TAT□ ARCHIT□CT
□□□H□A□	□CC□PATI□□AL □A□□T□ □ H□ALTH ADMI□I□TRATI□□
□□T□□□	□□T T□ □□T
PART□□	PARTITI□□
P□L□	PR□P□RT□ LI□□
PL□	PLAT□
PLA□□	PLA□T□R
PLM□□	PL□M□I□□
PL□□ D□	PL□□ □□D
P□L□	PA□□L
P□P□	P□□ □R P□L□
PR□	PAIR
PR□□A□□	PR□□A□RICAT□D
P□T□D□□	PR□□□□R□ TR□AT□D D□□□LA□ □IR
R□	RI□□R
RAD□	RADI□□
RA□T□	RA□T□R
R□I□□□	R□I□□□RC□M□□T
R□PT□	R□P□RT
R□□□IR□D	R□□□IR□D
R□□□	R□□I□□D □R R□□I□I□□
RM□	R□□M
R□ D□	R□D□ □□D
□□	□□□□TH
□□C□	□□LID C□R□
□CH□	□CH□D□L□
□CR□	□CR□□□
□□CT□	□□CTI□□
□HT□	□H□□T
□HT□□	□H□ATHI□□
□H□ R□	□H□□ □R
□IM□	□IMILAR
□LID□□	□LIDI□□
□□M□□□	□H□□T M□TAL □CR□□
□P□C□	□P□CI□ICATI□□□
□P□I□□P□	□P□CIAL I□□P□CTI□□
□□□□	□TAI□L□□□ □T□□L
□T□	□TR□□T
□TA□□□	□TA□□□R□D
□TD□	□TA□DARD
□TI□□□	□TI□□□□□R
□TL□	□T□□L
□TR□	□TR□CT□RAL
□□□P□CL□	□□□P□□D□D C□ILI□□
□□M□	□□MM□TRICAL
T□	TR□AD
T □ □	T□P A□D □□TT□M
T □ □	T□□□□□ A□D □R□□□□
T□□□	T□P □□ □□AM
T□C□	T□P □□ C□R□
TH□□	THIC□
T□L□	T□P □□ L□D□□R
T□□□	T□P □□ □AIL □R T□□□AIL
T□□	TAP□R□D □T□□L □IRD□R
T□□ □	T□P □□ □ ALL
T□P□	T□PICAL
□□□□C□	□□I□□RM □□ILDI□□ C□D□
□□□□□	□□L□□□ □□T□D □TH□R□ I□□
□□	□□RTICAL
□□RT□	□□RTICAL
□T□	□I□□L TIL□
□ □	□ □□T
□ □	□ ITH
□ AI□	□ AI□□C□T
□ C□	□ AT□R CL□□□T
□ D□	□ □□D
□ I□	□ R□□□□HT IR□□
□ □□	□ ITH□□T
□ □ □	□ □LD□D □ IR□ □A□RIC
□D□	□ARD

DIR□CT□R□

□□ □□R
MA□□□TIC R□ALT□ C□MPA□□
□□□□□ CR□□□R□AD□ P□□ □□□□ □□TH □LR□
CIT□ □□ I□D□□TR□, CA □□□□□□□□□□
T□L□□□□□□□□□□□□□□

ARCHIT□CT
□AM□□ R□□□RT□□□
C□MM□RC□ C□□□TR□CTI□□ C□□
□□□□□ CR□□□R□AD□ P□□ □□□□ □□TH □LR□
CIT□ □□ I□D□□TR□, CA □□□□□□□□□□
T□L□□□□□□□□□□□□□□
□A□□□□□□□□□□□□□□□
□□ail□r□□ert□□n□ c□□ □ercel□c□□

□□□T□CH□ICAL
PA□L □□□I□□□
□IL□□ □□□I□□□RI□□ A□□□CIAT□□, I□C□
□□ □ □□□□□ □□H□□□□ DRI□□, □□IT□ A□,
□ A□□□□HA, □ I □□□□□
T□L□□□□□□□□□□□□□□
□A□□□□□□□□□□□□□□□
□□ail□□il□au□e□ □ile□enar□c□□

□TR□CT□RAL □□□I□□□R
PATRIC□ D□R□□□□LD□
PI□RC□ □□□I□□□R□ I□C
□□□ □□□R□AD□ A□ A□□□, □□IT□ □□□
MIL□ A□□□□, □ I □□□□□
T□L□□□□□□□□□□□□□□
□A□□□□□□□□□□□□□□□
□□ail□□dr□ □ierceen□ineer□c□□

CI□IL
ADAM R□ART□
PI□□ACL□ □□□I□□□RI□□ □R□□P
□□□□□ □ □□L□□M□□□D RD, □□IT□ □□□
□R□□□□I□LD, □ I □□□□□
T□L□□□□□□□□□□□□□□
□A□□□□□□□□□□□□□□□
□□ail□ada□ art□□ □innacle□en□r□c□□

LA□D□CAP□
H□LL□R □ A□□□CIAT□□, LLC
□□□ R□D□ □□D C□□RT
RACI□□, □ I □□□□□
T□L□□□□□□□□□□□□□□
□A□□□□□□□□□□□□□□□
□□ail□da□id□ □da□idheller□c□□

M□CHA□ICAL, PL□M□I□□

□L□CTRICAL

□IR□ PR□T□CTI□□

□ICI□IT□ MAP

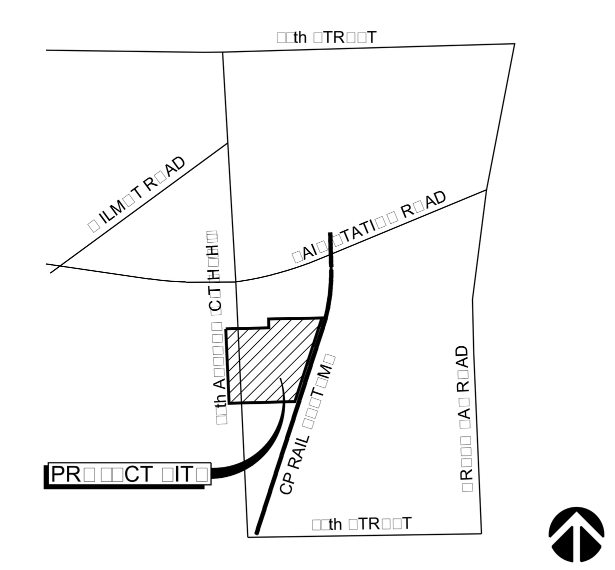

□□□□RAL □□T□□

□□□□RAL

□□ ALL □ □R□ □HALL C□□□□RM T□ TH□ □□□□ I□C□ I□T□R□ATI□□AL □□ILDI□□ C□D□ A□D □ILLA□□ □□ PL□A□A□T PRAIRI□, □ I□C□□□I□ R□□□IR□M□□T□ A□D □TH□R C□D□□ APPLICA□L□ T□ TH□ PR□□□CT□I□ TH□ □□□□T □□A C□□□LICT □ ITH C□D□ R□□□IR□M□□T□ A□D IT□M□ CALL□D □□T □□ PLA□□, THAT C□D□ □R CALL□□□T □ HICH □□TA□LI□H□□ TH□ HI□H□R □TA□DARD □HALL TA□□ PR□C□D□□C□□

□□ C□□TRACT□R □HALL □□RI□□ ALL DIM□□□I□□□ A□D C□□DITI□□□ AT TH□ □□□ □IT□ A□D R□P□RT A□□ DI□CR□PA□CI□□ T□ TH□ ARCHIT□CT□ □□□I□□□R □□R I□T□RPR□TATI□□ A□D□□R C□RR□CTI□□□C□□T □□ C□RR□CTI□□ □ □R□ □A□□D □□ MI□I□T□RPR□TATI□□ □□ TH□ C□□TRACT□R □□ □□R□P□RT□D DI□CR□PA□CI□□ □HALL □□ □□R□□ □□ TH□ C□□TRACT□R□

□□ □□□TILATI□□ □□ □□□□□CT □□ILDI□□ □HALL C□MPL□ □ ITH TH□ PR□□I□I□□ □□ □□□□I□□C□

□□ A□□ □□T□R□ □T□RA□□ A□D HA□DLI□□ □□HA□ARD□□□ MAT□RIAL□ □HALL C□MPL□ □ ITH □□□□ I□T□R□ATI□□AL □□ILDI□□ C□D□□ APPR□□AL□ M□□T □□ □□TAI□□D □R□M TH□ □IR□ D□PARTM□□T A□D □□ILDI□□ D□PARTM□□T PRI□R T□ □CC□PA□C□□

□□ MA□IM□M □LAM□□□PR□AD CLA□□I□ICATI□□□ □□ □I□I□H MAT□RIAL□ □□□D □□ I□T□RI□R □ ALL□ A□D C□ILI□□□ □HALL □□T □□C□□D CLA□□ I AT □□CL□□□D □□RTICAL □□IT□ A□□, CLA□□ II AT □TH□R □□IT□ A□□ A□D CLA□□ III AT R□□M□ A□D AR□A□ □ H□R□ APPR□□□D □PRI□□L□R □□□T□M PR□T□CTI□□ I□ PR□□ID□D□TH□ □LAM□ □PR□AD CLA□□I□ICATI□□ RATI□□ MA□ □□ R□D□C□D □□□ CLA□□I□ICATI□□, □□T I□ □□ CA□□ □HALL MAT□RIAL□ HA□I□□ A CLA□□I□ICATI□□ □R□AT□R THA□ CLA□□ III □□ □□□D□

□□ □IR□ □PRI□□L□R □□□T□M PLA□□ □HALL □□ □□□MITT□D T□ A□D APPR□□□D □□ □IR□ D□PARTM□□T A□D □□ILDI□□ D□PARTM□□T PRI□R T□ I□□TALLATI□□□□ H□□ □□R□I□□ M□R□ THA□ □□□ □PRI□□L□R□, A□T□MATIC □PRI□□L□R □□□T□M□ □HALL □□ □□P□R□I□□D □□ A□ APPR□□□D C□□TRAL, PR□PRI□TAR□ □R R□M□T□ □TATI□□ □□R□IC□ □R A L□CAL ALARM □HICH □ILL □I□□ A□ A□DI□L□ □I□□AL AT A C□□□TA□TL□ ATT□□D□D L□CATI□□□

□□ ALL DR□□ ALL C□□□TR□CTI□□ M□□T □□ A MI□IM□M □□ □□" □□L□□□ □TH□R□I□□ □□T□D□□□□ T□P□ □ AT C□RRID□R□ A□D □HA□T□□

□□ □□I□MIC R□□TRAI□T□C□MPL□ □ ITH R□C□MM□□D□D □TA□DARD □□R □□I□MIC R□□TRAI□T □□ DIR□CT H□□□ □□□P□□D□D C□ILI□□ A□□□M□LI□□ P□R □□□□ I□□C□C□D□□

□□ ATTACHM□□T □□ TH□ R□□TRAI□T □ IR□□ T□ TH□ □TR□CT□R□ A□□□□ □HALL □□ AD□□□AT□ □□R TH□ L□AD IMP□□□D□

□□□ DIM□□□I□□□ AR□ T□ □□ □AC□ □□ □T□D □R C□□CR□T□ □□L□□□ □□T□D □TH□R□ I□□□

□□□ □L□□ATI□□□ AR□ T□ T□P □□ C□□CR□T□ □L□□R□

□□□ PR□□ID□ □IR□ □□TI□□□I□H□R□ I□ ACC□RDA□C□ □ ITH □□PA □TA□DARD □□□□ □□IC□

□□□ ALL □LA□I□□ □HALL C□□□□RM T□ CHAPT□R □□, □□□□ □DITI□□ I□□C□ A□D C□□□□M□R PR□D□CT □A□□T□ □TA□DARD□ □□R ARCHIT□CT□RAL□

□□□ □□L□□□ □□□I□□□L□ □H□□ □, D□□R L□CATI□□□ □□T L□CAT□D □□ DIM□□□I□□□ □HALL □□ C□□T□R□D I□ □ ALL □R □HALL □□ L□CAT□D □I□□ □□□I□CH□□ □R□M □I□I□H □ ALL T□ □D□□ □□ D□□R □□C□□

□□□ □P□CI□ICATI□□□, □□□□D □□PARAT□L□, AR□ A PART □□ THI□ C□□TRACT□

□□□ H□ATI□□ A□D □□□TILATI□□ D□CT□ P□□□TRATI□□ □H□□R C□RRID□R □R □CC□PA□C□ □□PARATI□□□ □HALL □□ PR□□ID□D □ ITH DAMP□R□ □ ITH □H□□R RATI□□ A□D C□MPL□ □ ITH □□□□ I□□C□C□D□□

□□□ □I□□□ □□ □□□IPM□□T PAD□, □A□□□, □□CL□□□R□□ A□D □P□□I□□□ AR□ APPR□□IMAT□ □□L□□C□□TRACT□R □HALL □□RI□□ ALL DIM□□□I□□□ □ ITH MA□□□ACT□R□R A□D PHA□□ HI□ □ □R□ A□ R□□□IR□D□

□□□ ALL □□T□RI□R □ ALL □P□□I□□□, □LA□HI□□, C□□□T□R□LA□HI□□ A□D □□PA□□I□□ □□I□T□, □HALL □□ C□□□TR□CT□D I□ □□CH A MA□□□R A□ T□ MA□□ TH□M □ □ATH□RPR□□□□

□□□ □□T □□□D□

□□□ PR□□ID□ APPR□□□D □AL□□□□PARATI□□ □□T□ □□□ ALL DI□□IMILAR MAT□RIAL□ A□D AL□MI□□M I□ C□□TACT□ACC□PTA□L□ MAT□RIAL□ AR□ THIC□ □□DI□D □IT□MI□□□□ PAI□T A□D □□□PR□□□ □H□□T □A□□□T□□

□□□ P□D□□TRIA□ PR□T□CTI□□ □HALL □□ PR□□ID□D A□ R□□□IR□D □□ TH□ C□□□T□ A□D □□T I□ PLAC□ PRI□R T□ □TARTI□□ A□□ PHA□□ □□ □ □R□ □ H□R□ PR□T□CTI□□ I□ R□□□IR□D□

□□□ □IR□ □T□P□, □L□C□I□□ A□D □RAMI□□ M□M□□R□ PI□RC□D □□R □TILIT□ R□□□ R□□□IR□ PAC□I□□ □□□AL T□ □IR□ R□□I□TA□C□ PRI□R T□ □□CH PI□RCI□□□

□□□ TH□ □□□CTI□□ □□ TH□ R□□□ A□D □□RTICAL □□R□AC□ □HALL □□ □LA□H□D I□ A MA□□□R T□ MA□□ TH□M □ AT□RPR□□□□

□□□ PR□□ID□ C□MPL□T□ T□MP□RAR□ □TILITI□□ D□RI□□ C□□□TR□CTI□□ P□R PLA□□ A□D □P□CI□ICATI□□□□

□□□ L□□□R T□P□ HARD□ AR□ I□ R□□□IR□D □□ ALL D□□R□□

□□□ I□ ACC□RDA□C□ □ ITH □□□□ I□□C□, A□□ □LA□□ □□□□□CT T□ H□MA□ IMPACT □HALL □□ □A□□T□ □LA□□□

□□□□ □□ □T□RA□□ □□HA□ARD□□□ □R □LAMMA□L□ MAT□RIAL□ □R C□MPL□ □ ITH □IR□ C□D□ □□CTI□□ □□□□

□□□ ALL □ □ATH□R PR□□□I□□ □HALL C□MPL□ □ ITH □□□□ I□□C□

□□□R□□ C□□□□R□ATI□□

□□ □□ILDI□□ A□D □□ILDI□□ □L□M□□T□ □HALL C□□□□RM T□ R□□□IR□M□□T□ □□ □□□□ "M□D□L □□□R□□ C□D□"□

□□IT D□□R□

□□ □□IT D□□R□ □HALL □□ □P□□A□L□ □R□M TH□ I□□ID□ □ ITH□□T TH□ □□□ □□A □□□ □R A□□ □P□CIAL □□□□ L□D□□ □R □□□□RT □□C□PT THAT □□T□RI□R D□□R□ MA□ □□ L□C□□D I□ TH□ □□LL□□I□□ I□ PR□□ID□D□

A□ A L□C□I□□ D□□IC□ THAT □ ILL □□ R□ADIL□ DI□TI□□□I□HA□L□ A□ L□C□□D□

□□ A D□RA□L□ □I□□ P□□T□D □□ □R AD□AC□□T T□ TH□ D□□R □TATI□□ "THI□ D□□R T□ R□MAI□ □□L□C□□D D□RI□□ □□□I□□□□ H□□R□" I□ L□TT□R□ □□T L□□□ THA□ □" HI□H □□ A C□□TRA□TI□□ □AC□□R□□□D□

□□IT □I□□□

□□ PR□□ID□ A□ □□IT □I□□ □ ITH L□TT□R□ HA□I□□ PRI□CIPAL □TR□□□ □□T L□□□ THA□ □□" □ ID□ A□D AT L□A□T □" HI□H AT ALL □L□□R□ MAR□□D "□□IT"□

PR□MI□□□ ID□□TI□ICATI□□□

□□ APPR□□□D □□M□□R□ □R ADDR□□□□□ □HALL □□ PR□□ID□D I□ □□CH A P□□ITI□□ A□ T□ □□ PLAI□L□ □I□I□L□ A□D L□□I□L□ □R□M TH□ □TR□□T □R R□AD □R□□TI□□ TH□ PR□P□RT□□

ACC□□□I□LIT□

□□ILDI□□ □ □□ILDI□□ □L□M□□T□ □HALL C□□□□RM T□ □□□□ I□□C□ A□D A□□□I□□□□□ □DITI□□□

I□ □IT□ D□□□L□PM□□T

A□ HA□DICAPP□D PAR□I□□ □PAC□□

□□ PAR□I□□ □PAC□□□□HALL □□ ID□□TI□I□D □□ □I□□ □ ITH TH□ I□T□R□ATI□□AL □□M□□L □□ ACC□□□I□ILIT□ □I□□□□□M□□□T□D □□ A P□□T □R □ ALL I□ □R□□T □□ □PAC□□ □I□□ □HALL □□ R□□L□CT□RI□□D, □ HIT□ □□ DAR□ □L□□ □AC□□R□□□D, AT L□A□T □□ □□□I□□I□ AR□A, A□D M□□□T□D □□" A□□□□ □RAD□ □□R P□□T □ H□□ I□ A PATH □□ TRA□□L, □R □□" A□□□□ □RAD□ □□R □ ALL M□□□TI□□□

□□ I□ ADDITI□□, □□R□AC□ □□ PAR□I□□ □PAC□□□□□HALL □□ ID□□TI□I□D □□ □ITH□R □□ TH□ □□LL□□I□□ □CH□M□□□

□A□ □□TLI□I□□ □R PAI□TI□□ □PAC□ I□ □L□□ □ ITH C□□TRA□TI□□ C□L□R PR□□IL□ □I□□ □□□ H□□LCHAIR □ ITH □CC□PA□T, □R□□

□□□ I□T□R□ATI□□AL □□M□□L □□ ACC□□□I□ILIT□ I□ □ HIT□ □□ □L□□ □AC□□R□□□D, □□" □ □□", □I□I□L□ □ H□□ □□HICL□ I□ PAR□□D□

□□ □ACH □□TRA□C□ T□ □□□□□TR□□T PAR□I□□ □ACILIT□ □R □ACH HA□DICAPP□D PAR□I□□ □PAC□□□□□HALL AL□□ HA□□ A □I□□ □□" □ □□" □TATI□□ THAT □□A□TH□RI□□D □□HICL□□□□PAR□I□□ I□ HA□DICAPP□D □PAC□□□□MA□ □□ □□□□□CT T□ T□□ □A□ A□□

□□ ALL □□ILDI□□ □□TRA□C□ THAT AR□ ACC□□□I□L□ T□ A□D □□A□L□ □□ PH□□ICALL□ HA□DICAPP□D□PH□□ICALL□ DI□A□L□D P□R□□□□ □HALL □□ ID□□TI□I□D □ ITH AT L□A□T □□□ □TA□DARD □I□□ DI□PLA□I□□ TH□ I□T□R□ATI□□AL □□M□□L □□ ACC□□□I□ILIT□ A□D □ ITH ADDITI□□AL DIR□CTI□□AL □I□□□, A□ R□□□IR□D, T□ □□ □I□I□L□ T□ P□R□□□□ AL□□□ APPR□ACHI□□ P□D□□TRIA□ □ A□□□

II□ □□TRA□C□□ A□D CIRC□LATI□□

A□ D□□R□, □□□TI□□L□□ A□D C□RRID□R□

□□ THR□□H□LD □HALL □□ □□ HI□H□R THA□ □□" A□□□□ TH□ □L□□R□ □D□□ T□ □□□□L□D □ ITH A □L□P□ □□ □R□AT□R THA□ □I□ □I□ M□R□ THA□ □□"□

□□ □□T□RI□R L□□□L LA□DI□□ MA□ □L□P□ □P T□ □□" P□R □□□T I□ A□□ DIR□CTI□□ □□R □□R□AC□ DRAI□A□□□

□□ D□□R HARD□ AR□ □HALL □□ □□ TH□ L□□□R □R P□□H□P□LL T□P□ M□□□T□D □□" T□ □□" A□□□□ TH□ □L□□R A□D □□ □P□RA□L□ □ ITH A MA□□□□□□RT □□ □□□L□□□□□R □□T□RI□R D□□R□ A□D □L□□□ □□R I□T□RI□R D□□R□□

□□ TH□ L□□ □R □□" □□ TH□ D□□R □HALL □□ □□ □M□□TH, PLA□□ □□R□AC□ □□□ R□C□□□ □R TRAP□□□C□PT AT A□T□MATIC A□D □LIDI□□ D□□R□□

□□ C□RRID□R□ □HALL □□ □□" MI□IM□M I□ □ IDTH □R A□ R□□□IR□D □□ □CC□PA□T L□AD□C□RRID□R□ □□R□I□□ L□□□ THA□ □□ □CC□PA□T□ MA□ □□ □□" □ ID□□

□□ □TAIR□ A□□

□□ HA□DRAIL□ □HALL □□ □ □□" T□ □ □□" I□ □RIPPI□□ CR□□□ □□CTI□□ A□D □□□□" CL□AR □□ AD□AC□□T □ ALL□

□□ TR□AD□ □HALL HA□□ □M□□TH, R□□□D□D □R CHAM□□R□D □□P□□□D □D□□□ A□D □□ □LIP R□□I□TA□T□

□□ □□□I□□ □HALL □□T PR□□□CT M□R□ THA□ □ □□" PA□T □AC□ □□ TH□ RI□□R □□L□□ □

□□ □□T □□□D

□□ TH□ □PP□R APPR□ACH A□D L□□ □R TR□AD □□ □ACH □LI□HT □□ I□T□RI□R □TAIR□ □HALL □□ MAR□□D □ ITH A C□□TRA□TI□□ C□L□R□D □TRIP □" I□ □ IDTH□

□□ □□ □□T□RI□R □TAIR□ □ACH TR□AD □HALL □□ MAR□□D A□ □□T□D I□ IT□M □A□□□□□

PR□□□CT □□MMAR□

□IT□ AR□A	□ □□□□□ ACR□□
□□ILDI□□ AR□A	□ □□□,□□□ □□□□
□□ILDI□□ □R□□P	□ □ □□□
□□ILDI□□ T□P□	□ II □ □□LL□ □PRI□□L□R□D
ALL□□ A□L□ AR□A	□ □□LIMIT□D □□R T□P□ II □ □□LL□ □PRI□□L□R□D □ ITH □□□□□□□ARD□
PAR□I□□ PR□□ID□D	□ □□□
HA□DICAP PAR□I□□ PR□□ID□D	□ □□
T□TAL PAR□I□□ PR□□ID□D	□ □□□
TRAIL□R □PAC□□ PR□□ID□D	□ □□□

□□T□□□□R □IT□, LA□D□CAPI□□ A□D PAR□I□□, □□□ □H□□T M□□

APPLICA□L□ C□D□□

R□□□R□□C□ □□□□ I□C, IPC, I□C, IMC, I□CC, □□□□ ICC, A□□I

C□MM□RC□ C□□□TR□CTI□□ C□□, L.P□

□H□□T TITL□

□□ILDI□□ A
MA□□□TIC □AD□□R L□□I□TIC□ C□□T□R
CTH "H" □ILLA□□ □□ PL□A□A□T PRAIRI□, □ I

Dra□in□ Pl□t □ar

DRA□ □ □□ DAT□
D□ □□□ □□□□□□□

CCC □□□ □□□
□□□□□

□H□□T □□□
T□□□

□H□□T I□D□□

□H□□T □□□	D□□CRIPTI□□
	LA□D□CAP□
L□□□	□□□RALL LA□D□CAP□ PLA□
L□□□	□□LAR□□D LA□D□CAP□ PLA□
L□□□	□□LAR□□D LA□D□CAP□ PLA□
L□□□	□□LAR□□D LA□D□CAP□ PLA□
L□□□	□□LAR□□D LA□D□CAP□ PLA□
L□□□	LA□D□CAP□ □□T□□, □CH□D□L□□ □ D□TAIL□

□H□□T □□□	D□□CRIPTI□□
	□L□CTRICAL
	PL□M□I□□
	□IR□ PR□T□CTI□□

□H□□T □□□	D□□CRIPTI□□
	□TR□CT□RAL
□□□□	□□□□RAL □□T□□
□□□□	□TR□CT□RAL □CH□D□L□□
□□□□	□□□RALL □□□□DATI□□ PLA□
□□□□	□□□□DATI□□ PLA□ □AR□A A
□□□□	□□□□DATI□□ PLA□ □AR□A □
□□□□	□□□□DATI□□ PLA□ □AR□A C
□□□□	□□□□DATI□□ PLA□ □AR□A D
□□□□	□□□RALL R□□□ □RAMI□□ PLA□
□□□□	R□□□ □RAMI□□ PLA□ □AR□A A
□□□□	R□□□ □RAMI□□ PLA□ □AR□A A
□□□□	R□□□ □RAMI□□ PLA□ □AR□A A
□□□□	R□□□ □RAMI□□ PLA□ □AR□A A
□□□□	□TR□CT□RAL D□TAIL□
□□□□	□TR□CT□RAL D□TAIL□
□□□□	□TR□CT□RAL D□TAIL□
□□□□	□TR□CT□RAL D□TAIL□
	M□CHA□ICAL

□H□□T □□□	D□□CRIPTI□□
	ARCHIT□CT□RAL
A□□	MA□T□R □IT□ PLA□
A□□	□IT□ PLA□
A□□	PARTIAL □IT□ PLA□
A□□	PARTIAL □IT□ PLA□
A□□	□□□RALL □L□□R PLA□
A□□	PARTIAL □L□□R PLA□
A□□	PARTIAL □L□□R PLA□
A□□	PARTIAL □L□□R PLA□
A□□	PARTIAL □L□□R PLA□
A□□	□□□RALL □□T□RI□R □L□□ATI□□□
A□□	PARTIAL □□T□RI□R □L□□ATI□□□
A□□	□□T□RI□R □L□□ATI□□□
A□□	□□□RALL □□T□RI□R PAI□T □L□□ATI□□□
A□□	PARTIAL □□T□RI□R PAI□T □L□□ATI□□□
A□□	□□T□RI□R PAI□T □L□□ATI□□□
A□□	□□LAR□□D □□TR□ A□D □□□□IT PLA□
A□□	□□LAR□□D □□TR□ A□D □□□□IT PLA□
A□□	PARTIAL □□LAR□□D □□T□RI□R □L□□ATI□□□
A□□	PARTIAL □□LAR□□D □□T□RI□R □L□□ATI□□□
A□	□ALL □□CTI□□□
A□□	□□ILDI□□ □□CTI□□, RAMP PLA□ A□D □□CTI□□□
A□□	RAMP □□CTI□□□, □CR□□□□ ALL PLA□ □ □L□□ATI□□
A□□	□CR□□□□ ALL PLA□ A□D □L□□ATI□□
A□□	□CR□□□□ ALL PLA□ A□D □L□□ATI□□
A□□	□□□RALL R□□□ PLA□
A□□	PARTIAL R□□□ PLA□
A□□	PARTIAL R□□□ PLA□
A□□	PARTIAL R□□□ PLA□
A□□	PARTIAL R□□□ PLA□
A□□	D□□R □CH□D□L□□, D□□R T□P□□ A□D □I□D□□ T□P□□
A□□□	□L□CTRICAL A□D P□MP R□□M □L□□R PLA□ □ □□CTI□□□
A□□□	□L□CTRICAL A□D P□MP R□□M □□CTI□□□
AD□	MI□C□LLA□□□□□ D□TAIL□
AD□	MI□C□LLA□□□□□ D□TAIL□
AD□	MI□C□LLA□□□□□ D□TAIL□
AD□	MI□C□LLA□□□□□ D□TAIL□
AD□	MI□C□LLA□□□□□ D□TAIL□
AD□	MI□C□LLA□□□□□ D□TAIL□
AD□	MI□C□LLA□□□□□ D□TAIL□

□H□□T □□□	D□□CRIPTI□□
T□□	TITL□ □H□□T
T□□	□H□□T I□D□□
T□□	TITL□ □□ □TA□DARD D□TAIL□
T□□	TITL□ □□ □TA□DARD D□TAIL□
	CI□IL
C□□	C□□□R □H□□T
C□□	□□I□TI□□ C□□DITI□□□
C□□	□IT□ DIM□□□I□□AL A□D PA□I□□ PLA□
C□□	□IT□ DIM□□□I□□AL A□D PA□I□□ PLA□
C□□	□IT□ DIM□□□I□□AL A□D PA□I□□ PLA□
C□□	□RADI□□ PLA□
C□□	□RADI□□ PLA□
C□□	□RADI□□ PLA□
C□□	□RADI□□ PLA□
C□□□	□TILIT□ PLA□
C□□□	□TILIT□ PLA□
C□□□	□TILIT□ PLA□
C□□□	□IT□ □TA□ILI□ATI□□ PLA□
C□□□	□IT□ □TA□ILI□ATI□□ PLA□
C□□□	□IT□ □TA□ILI□ATI□□ PLA□
C□□□	□IT□ □TA□ILI□ATI□□ PLA□
C□□□	C□□□TR□CTI□□ D□TAIL□
C□□□	C□□□TR□CTI□□ D□TAIL□
C□□□	C□□□TR□CTI□□ D□TAIL□
C□□□	C□□□TR□CTI□□ D□TAIL□
C□□□	CTH H □RADI□□ A□D DRAI□A□□ PLA□
C□□□	CTH H PA□□M□□T MAR□I□□ A□D □I□□A□□ PLA□
DT□□	□TILIT□ DRAI□ TIL□ PLA□
DT□□	□TILIT□ DRAI□ TIL□ PLA□
DT□□	□TILIT□ DRAI□ TIL□ PLA□

This Document, Either as Drawing or the Assemblage of Electronic Data, is the Property of Commerce Construction Co., L.P. ("Commerce"). The acceptance or use of this document will be construed as an acceptance of the foregoing.

DAT□ | □□ | R□□I□I□□□

C□MM□RC□ C□□□TR□CTI□□ C□,L.P□
Cit□ □□ Indu□tr□, Cali□rnia
Tele□h□ne
Licen□e

□H□□T I□D□□

□□ILDI□□ A

MA□□□TIC □AD□□□R L□□I□TIC□ C□□T□R

CTH "H" □ILLA□□ □□ PL□A□A□T PRAIRI□, □I

Dra□in□ Pl□t □ar

DRA□ □ □□ DAT□

CCC □□□ □□□

□H□□T □□□

T□□

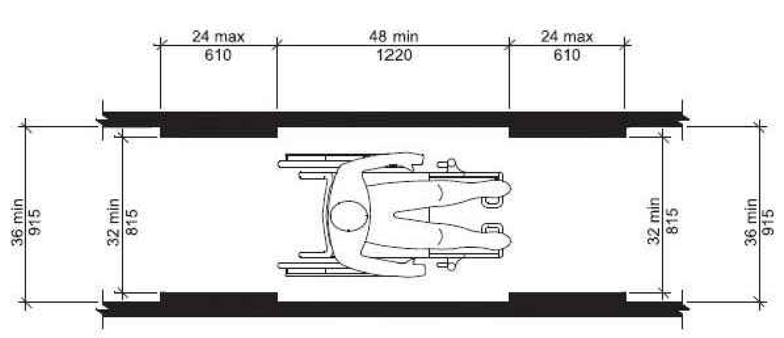

CLEAR WIDTH OF AN ACCESSIBLE ROUTE

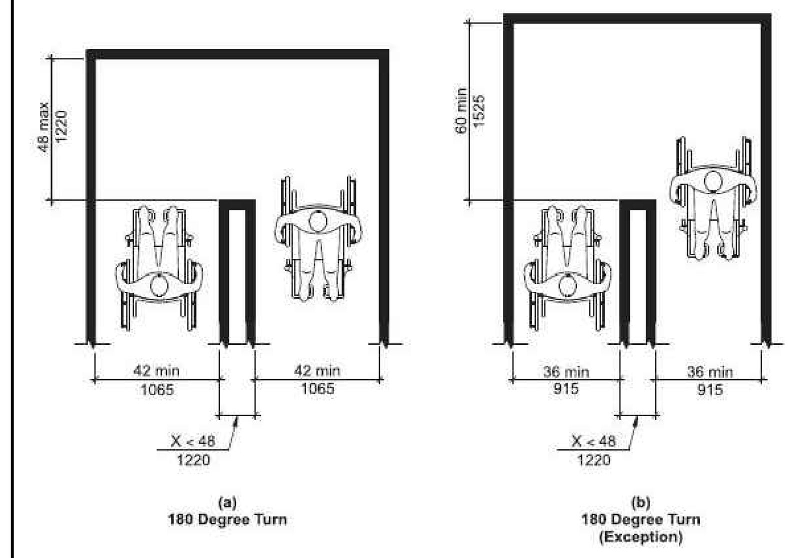

CLEAR WIDTH AT 180° TURN

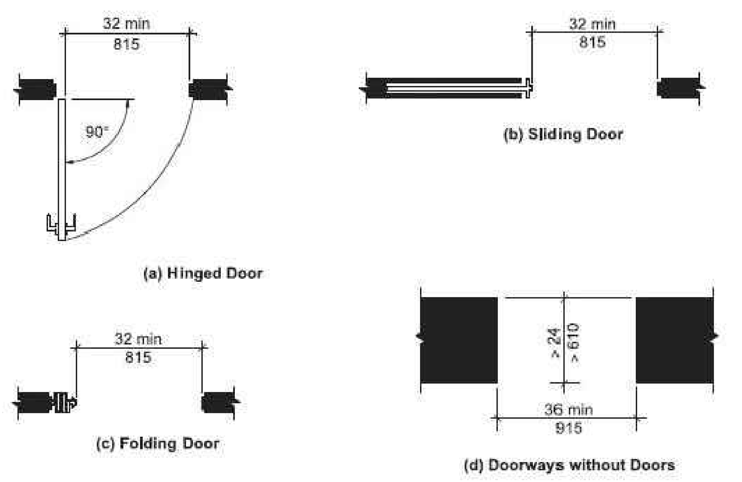

CLEAR WIDTH OF DOORS AND ...

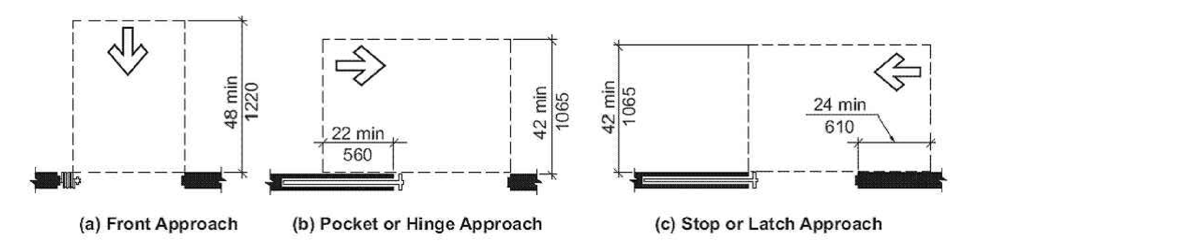

MANEUVERING CLEARANCE AT SLIDING AND FOLDING DOORS

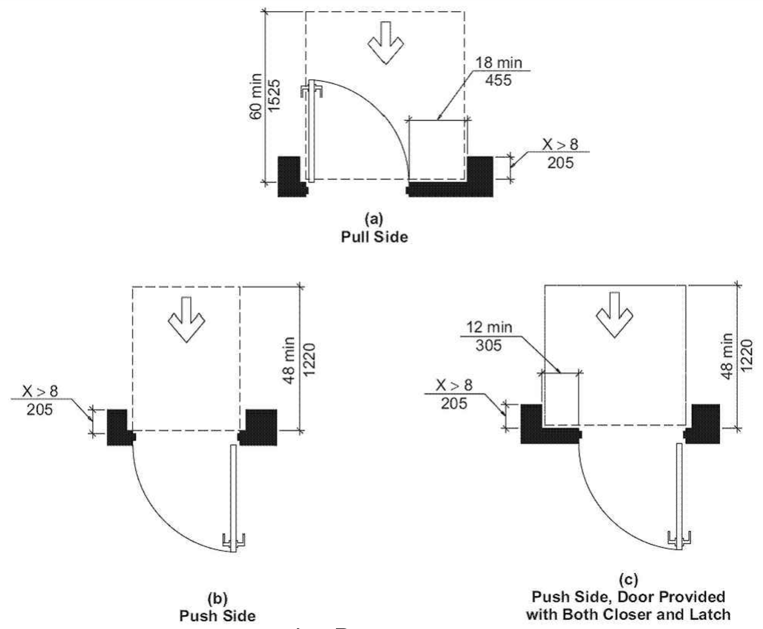

MANEUVERING CLEARANCE AT RECESSED DOORS

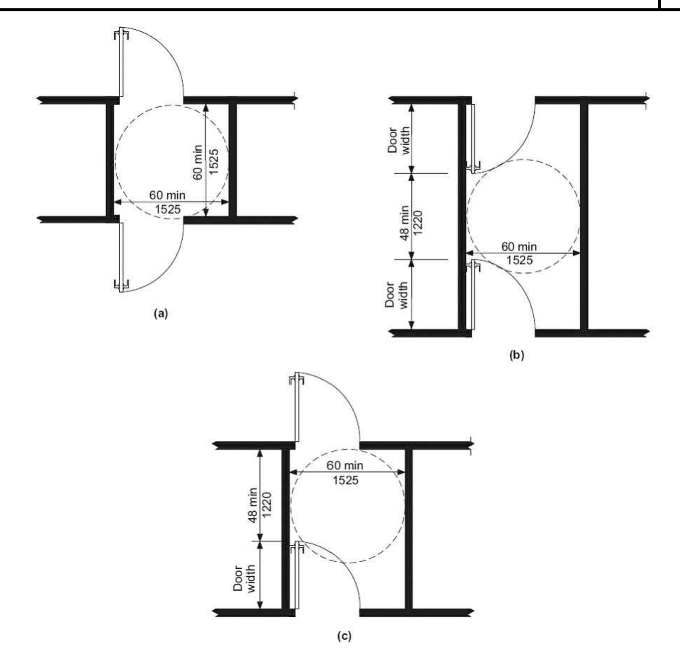

TWO DOORS IN A SERIES

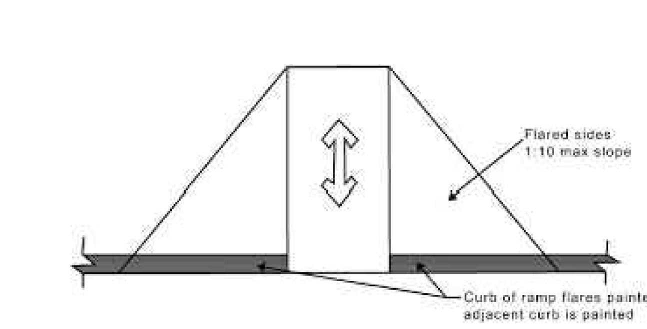

LANDINGS

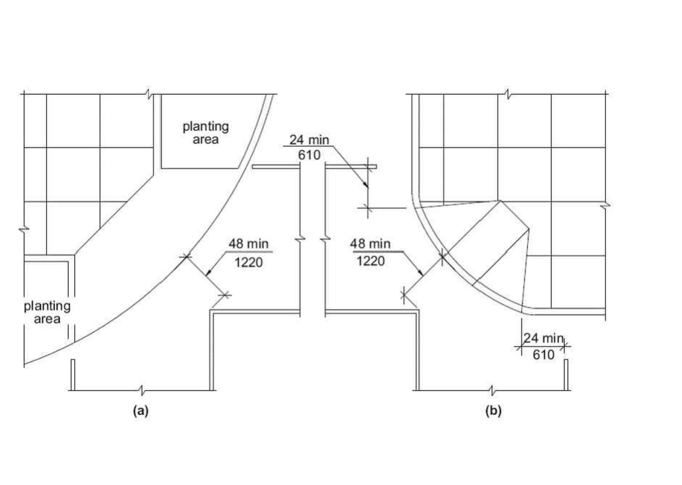

DIAGONAL CURB RAMPS

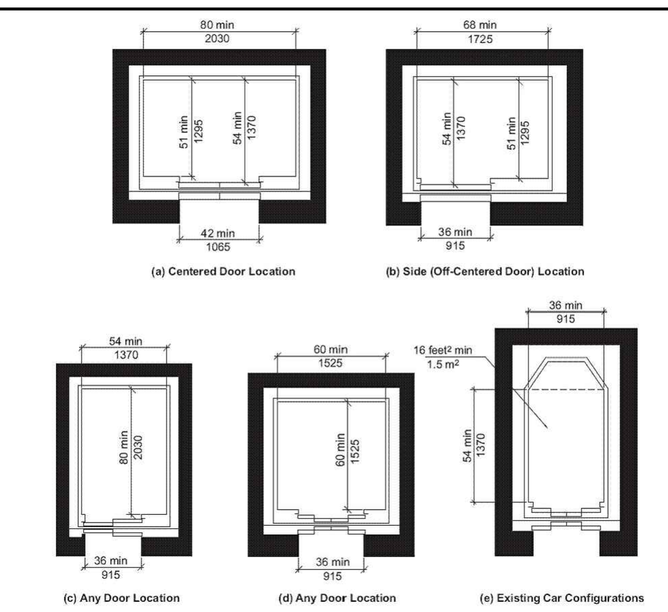

INSIDE DIMENSIONS OF ELEVATOR CARS

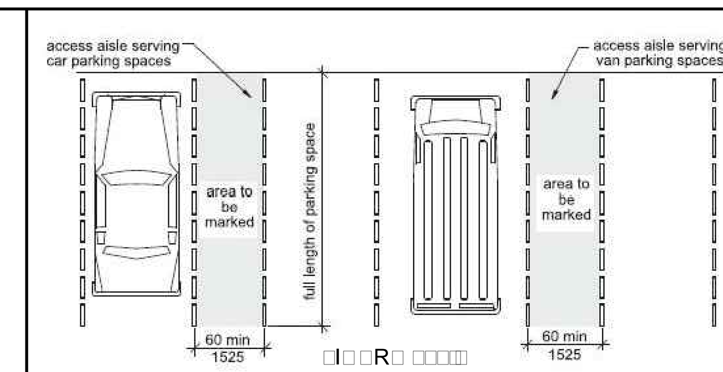

502.1 GENERAL. Accessible car and van parking spaces shall comply with Section 502.

502.2 Vehicle Space Size. Car parking spaces shall be 96 inches minimum in width. Van Parking spaces shall be 132 inches minimum in width.

EXCEPTION: Van parking shall be permitted to be 96 inches minimum in width where the adjacent access aisle is 96 inches minimum in width.

502.3 VEHICLE SPACE MARKING. Car and van parking spaces shall be marked to define the width. Where parking spaces are marked with lines, the width measurements of parking spaces and adjacent access aisles shall be made from the centerline of the markings.

EXCEPTIONS: Where parking spaces or access aisles are not adjacent to another parking space or access aisle, measurements shall be permitted to include the full width of the line defining the parking space or access aisle.

502.4 ACCESS AISLE. Car or van parking spaces shall have an adjacent access aisle complyinh with Section 502.4.

502.4.1 LOCATION. Access aisles shall adjoin an accessible route. Two parking spaces shall be permitted to share common access aisle. Access aisles shall not overlap with the vehicular way. Parking spaces shall be permitted to have access aisles placed on either side of the car or van parking space. Van parking spaces that are angled shall have access aisles located on the passenger side of the parking space.

502.4.2 WIDTH. Access aisles serving car and van parking spaces shall be 60 inches minimum in width.

502.4.3 LENGTH. Access aisles shall extend the full length of the parking space they serve.

502.4.4 MARKING. Access aisles shall be marked so as to discourage parking in them. Where access aisles are marked with lines, the width measurements of access aisles and adjacent parking spaces shall be made from the centerline of the markings.

EXCEPTION. Where access aisles or parking spaces are not adjacent to another access aisle or parking space, measurements shall be permitted to include the full width of the line defining the access aisle or parking space.

502.5 FLOOR SURFACES. Parking spaces and access aisles shall comply with Section 302 and have surface slopes not steeper than 1:48. Access aisles shall be at the same level as the parking spaces they serve.

502.6 VERTICAL CLEARANCE. A vertical clearance of 98 inches minimum shall be provided at the following locations:

1. Parking spaces for vans.
2. The access aisles serving parking spaces for vans.
3. The vehicular routes serving parking spaces for vans.

502.7 IDENTIFICATION. Where accessible parking spaces are required to be identified by signs, the signs shall include the International Symbol of Accessibility complying with Section 703.6.3.1. Signs identifying van parking spaces shall contain the designation "van accessible." Such signs shall be 60 inches minimum above the floor of the parking space, measured to the bottom of the sign.

502.8 RELATIONSHIP TO ACCESSIBLE ROUTE. Parking spaces and access aisles shall be designed so that cars and vans, when parked, cannot obstruct the required clear width of adjacent accessible routes.

PARKING SPACE ACCESS AISLE

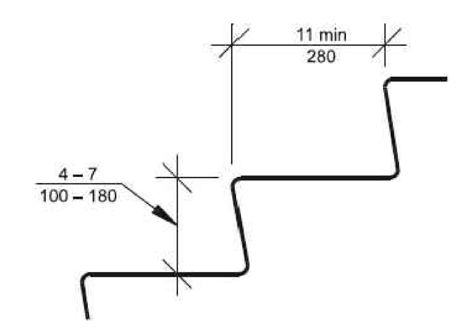

TREADS AND RISERS FOR ACCESSIBLE STAIRS

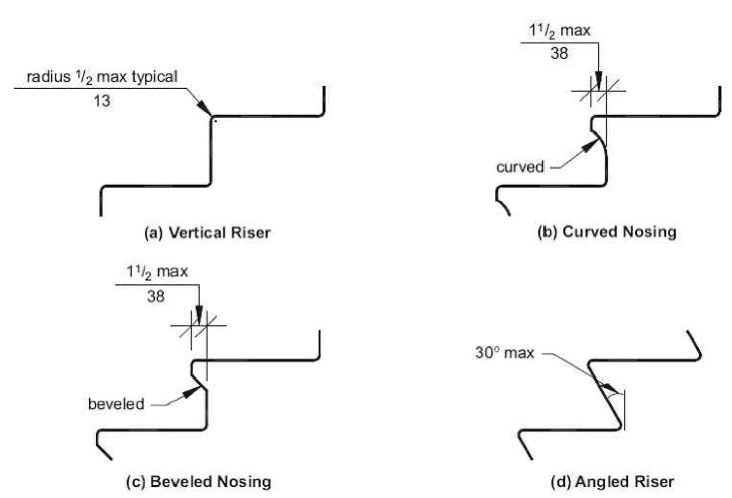

STAIR NOSINGS

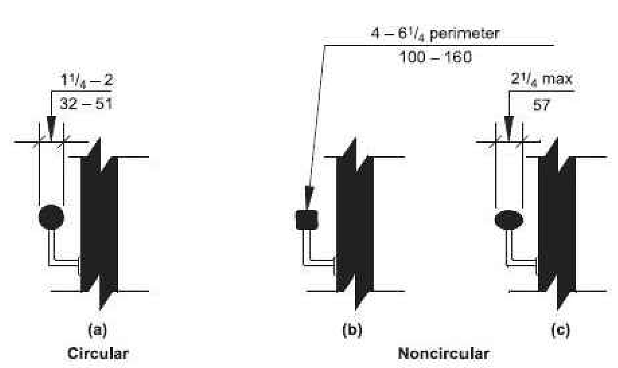

HANDRAIL CROSS SECTIONS

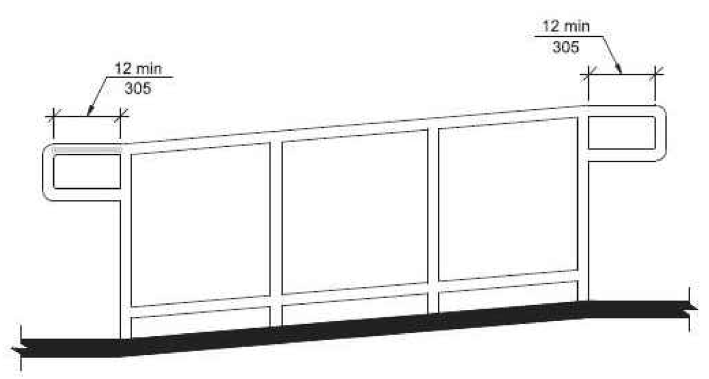

TOP AND BOTTOM HANDRAIL EXTENSIONS AT RAMPS

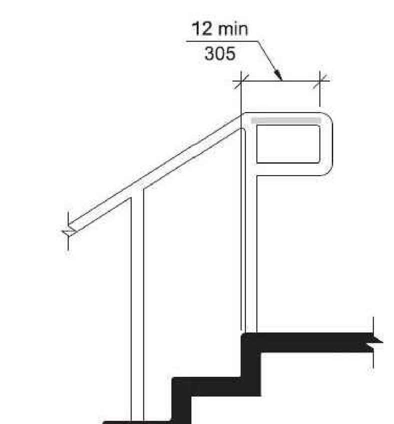

TOP HANDRAIL EXTENSIONS AT STAIRS

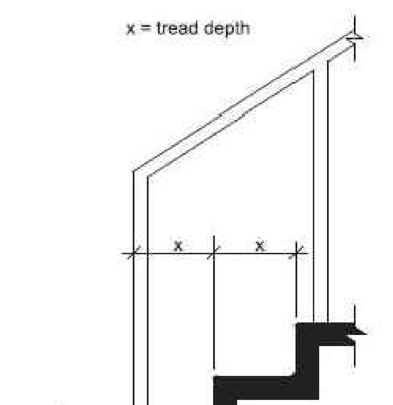

BOTTOM HANDRAIL EXTENSIONS AT STAIRS

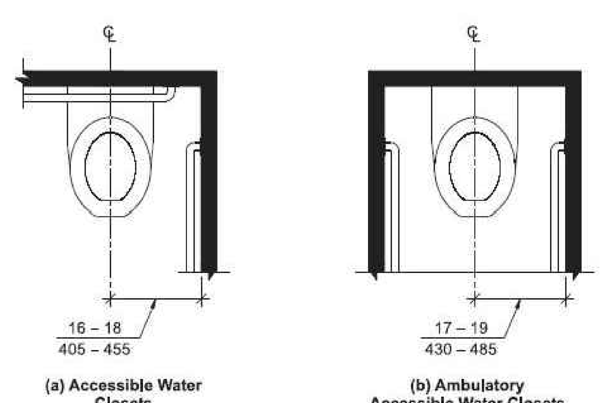

WATER CLOSET LOCATION

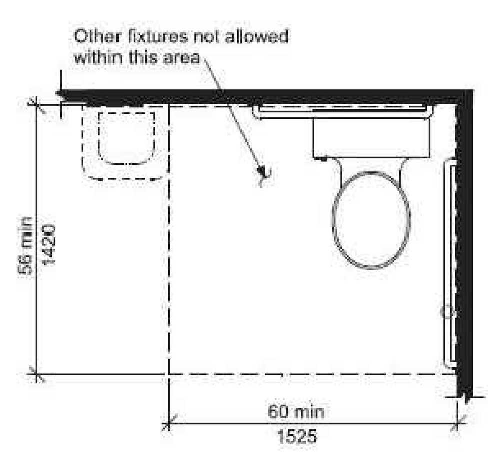

□I□□ □□ CL□RA□C□ □□ WATER

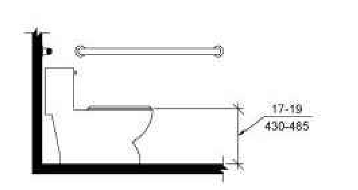

WATER CLOSET SEAT HEIGHT

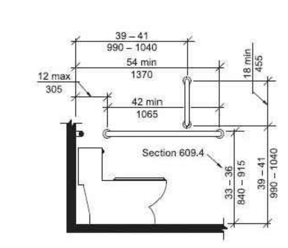

SIDE WALL GRAB BAR FOR WATER CLOSET

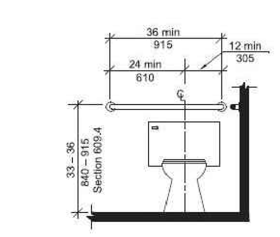

REAR GRAB BAR FOR WATER CLOSET

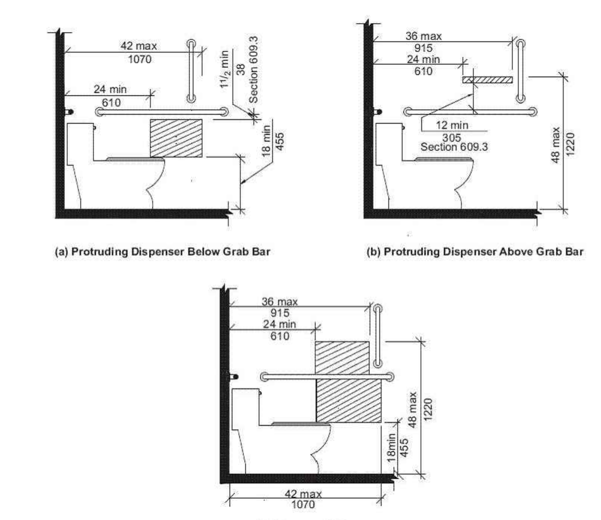

DISPENSER OUTLET LOCATION

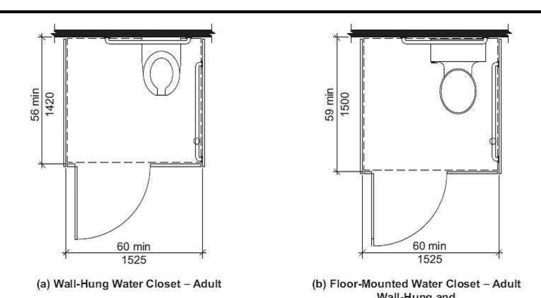

WHEELCHAIR ACCESSIBLE TOILET COMPARTMENT

NOTES:
ALL BUILDING COMPONENTS SHALL COMPLY WITH ADA STANDARDS A...

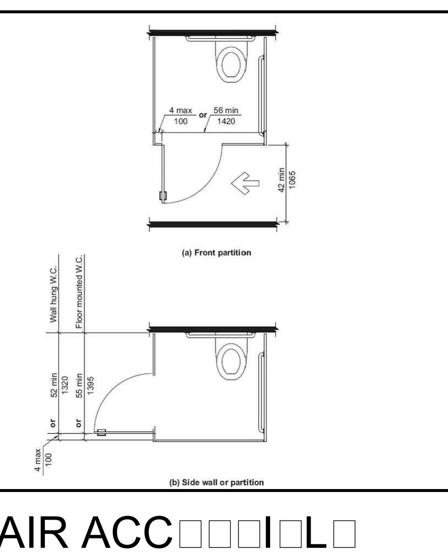

WHEELCHAIR ACCESSIBLE COMPARTMENT DOOR OPENINGS

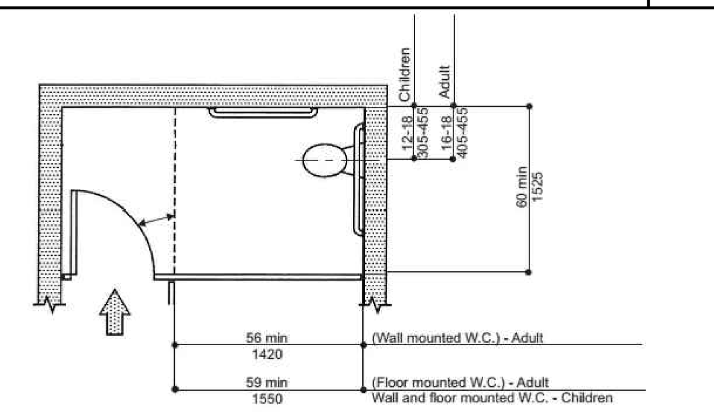

WHEELCHAIR ACCESSIBLE COMPARTMENT DOOR OPENINGS ALTERNATE

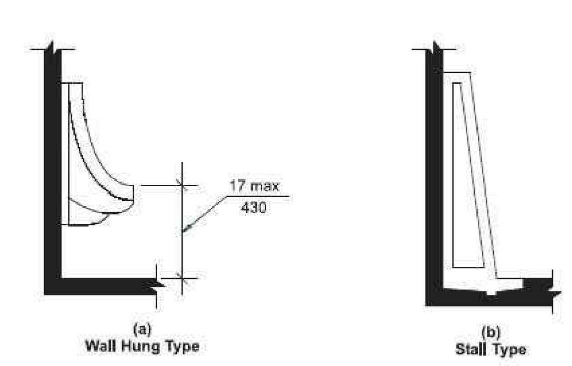

HEIGHT OF URINALS

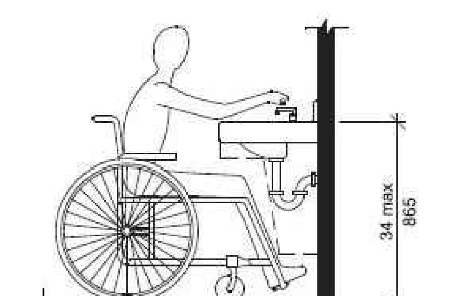

HEIGHT OF LAVATORIES AND SINKS

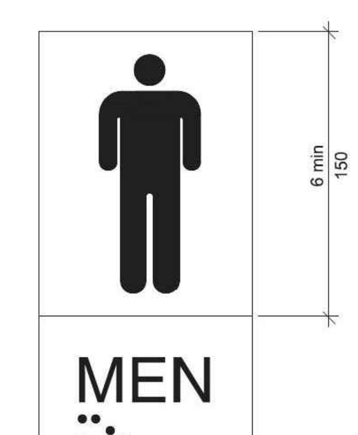

PICTOGRAM FIELD

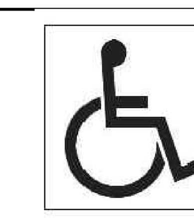

INTERNATIONAL SYMBOL OF ACCESSIBILTY

This Document, Either as Drawing or the Assemblage of Electronic Data, is the Property of Commerce Construction Co., L.P. ("Commerce"). ... without the written consent of Commerce. This document ... without warranty of any kind either expressed or implied. ... and completeness. Commerce is not responsible for ... document. The acceptance or use of this document will ...

COMMERCE CONSTRUCTION CO., L.P.

TITLE: STANDARD DETAILS

BUILDING A

MA□□□TIC □AD□□□R L□□I□TIC□ C□□T□R

CTH "H" □ILLA□□ □□ PL□A□A□T PRAIRI□, □I

Drawing Plot Bar

CCC

SHEET

T

□□T□□
ALL □LD□□C□MP□□□□T□ □HALL C□MPL□
□ ITH A□□I □TA□DARD□ A□□□□□□□□□

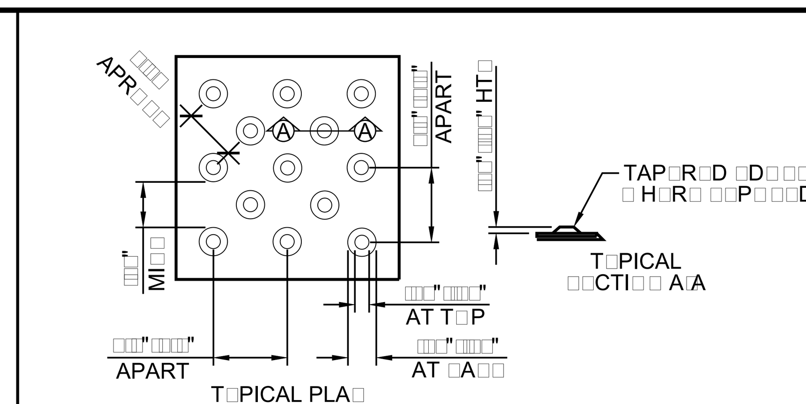

□□T□□D□T□CTA□L□ □ AR□I□□□ □HALL C□□TRA□T □I□□ALL□ □ ITH AD□□□ AL□I□□ □□R□AC□□, □ITH□R LI□HT□□□DAR□, □R DAR□□□□LI□HT□TH□ MAT□RIAL □□□D T□ PR□□ID□ C□□TRA□T □HALL □□ A□ I□T□□RAL PART □□ TH□ □□R□AC□□

□□T□□D□T□CTA□L□ □ AR□I□□□ AT C□R□ RAMP□ □HALL □□T□□D □□" I□ TH□ DIR□CTI□□ □□ TRA□□L □□R TH□ □□LL □ IDTH □□ TH□ RAMP R□□ L□□□ □" MA□□□□ □ACH □ID□, □□CL□DI□□ A□□ □LAR□D □ID□□, A□D L□CAT□D □□ □D□□ □□AR□□T TH□ C□R□ I□ □" □□" □R□M TH□ LI□□ AT TH□ □AC□ □□ TH□ C□R□ MAR□I□□ TH□ TRA□□ITI□□ □T□ □□ TH□ C□R□ A□D TH□ □□TT□R, □TR□□T, □R HI□H□ A□□D□T□CTA□L□ □ AR□I□□□ □□ PARALL□L C□R□ RAMP□ □HALL □□ PLAC□D □□ TH□ T□R□I□□ □PAC□ AT TH□ □L□□H TRA□□ITI□□ □T□ □□TH□ □TR□□T A□D □ID□□ AL□ □□R TH□ □□LL □ IDTH □□ TH□ T□R□I□□ □PAC□ AT TH□ □L□□H TRA□□ITI□□ L□□□ □" MA□□□ACH □ID□□

□I□□ A□D □PACI□□ □□ TR□□CAT□D D□M□□

TR□□CAT□D D□M□□

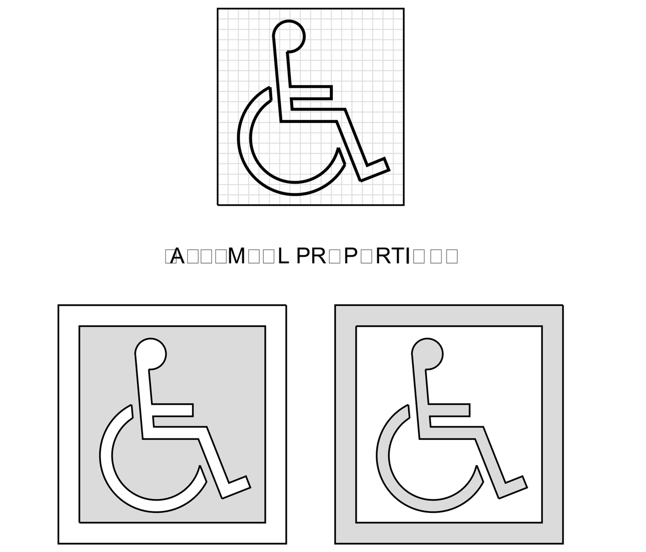

□A□□□M□□L PR□P□RTI□□□

□□□DI□PLA□ C□□DITI□□□

TH□□□ DIA□RAM□ ILL□□TRAT□ TH□ □P□CI□IC R□□□IR□M□□T□ □□ TH□□□ R□□□LATI□□□ A□D AR□ I□T□□D□D □□L□ A□ A□ AID □□R □□ILDI□□ D□□I□□ A□D C□□□TR□CTI□□□

I□T□R□ATI□□AL □□M□□L □□ ACC□□□I□ILIT□

INTERNATIONAL SYMBOL OF ACCESSIBILITY

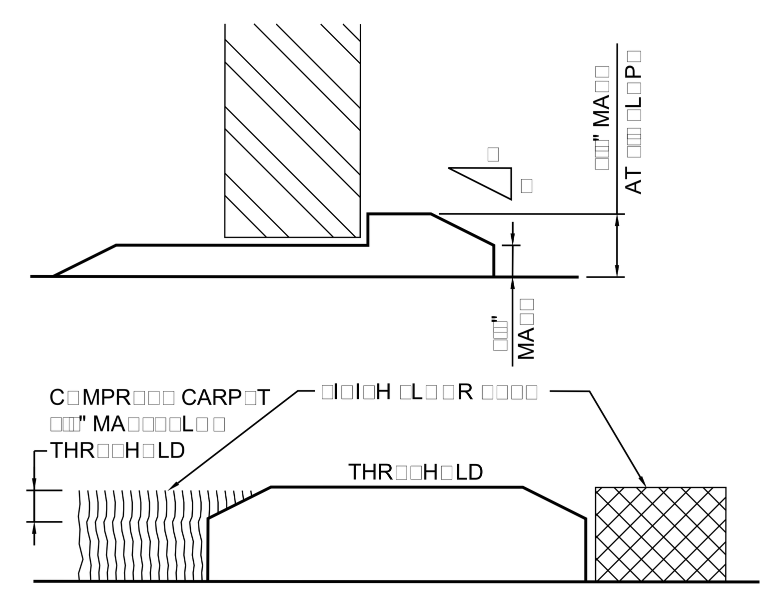

TH□□□ DIA□RAM□ ILL□□TRAT□ TH□ □P□CI□IC R□□□IR□M□□T□ □□ TH□□□ R□□□LATI□□□ A□D AR□ I□T□□D□D □□L□ A□ A□ AID □□R □□ILDI□□ D□□I□□ A□D C□□□TR□CTI□□□

THR□□H□LD□

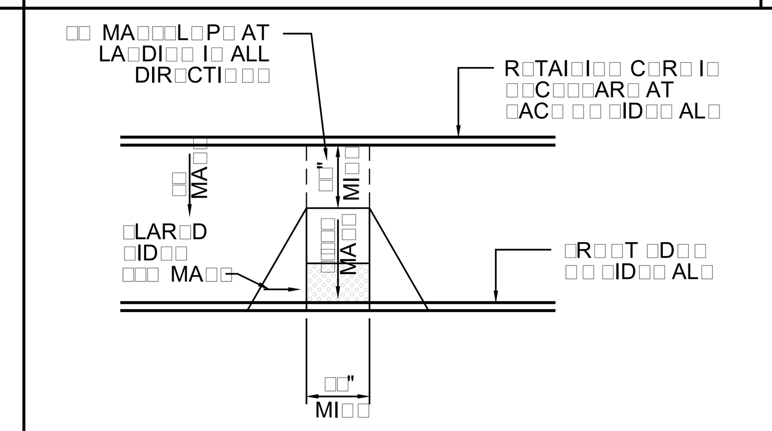

P□RP□□DIC□LAR C□R□ RAMP D□TAIL

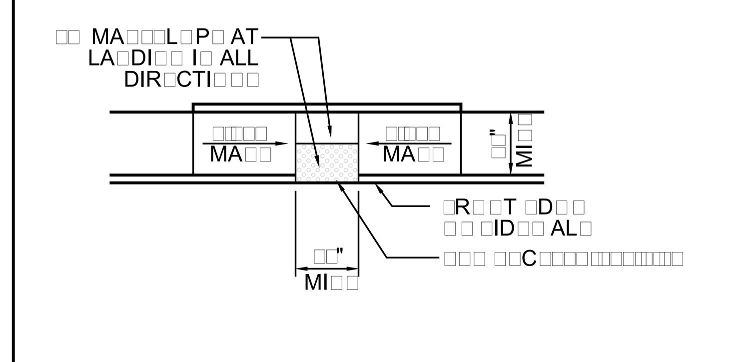

PARALL□L C□R□ RAMP D□TAIL

C□R□ RAMP D□TAIL

Thi□ □i□n □hall □e □□□ted at all entrance□t□ c□□ □ercial □r re□idential area□that ha□e de□i□nated □ire lane□□

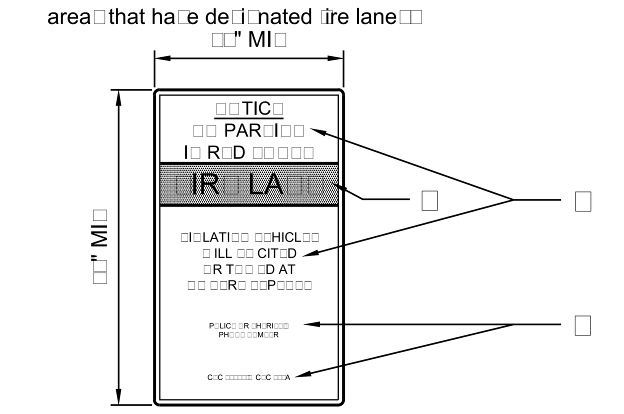

- □□ The □□rd□"□IR□ LA□□" □hall □e □hite re□lecti□e □n red □ac□□r□und □ac□□r□und and n□ □□aller than □" in hei□ht□
- □□ Letterin□ □hall □e red □n □hite re□lecti□e □ac□□r□und, n□ □□aller than □" in hei□ht□□□r area□□ith □IR□ LA□□ □i□n□□nl□and n□re□cur□in□□It □a□read "□□ PAR□I□□ I□ MAR□□D □□□□□"□
- □□ Letterin□ □hall □e red □n □hite re□lecti□e □ac□□r□und, n□ □□aller than □" in hei□ht□
- □□ The □i□n □hall □e n□ □□aller than □□" □ide □□ □□" hi□h□
- □□ The □i□n □hall □e □ecurel□□ □unted □acin□ the directi□n □□tra□el and clearl□ □i□i□le t□ □nc□□in□ tra□ic enterin□ the de□i□nated area□□i□n□ □hall □e □□dura□le □aterial and in□talled □er □uideline□ □□r "□i□n M□untin□"□

□IR□ LA□□ □□TRA□C□ □I□□

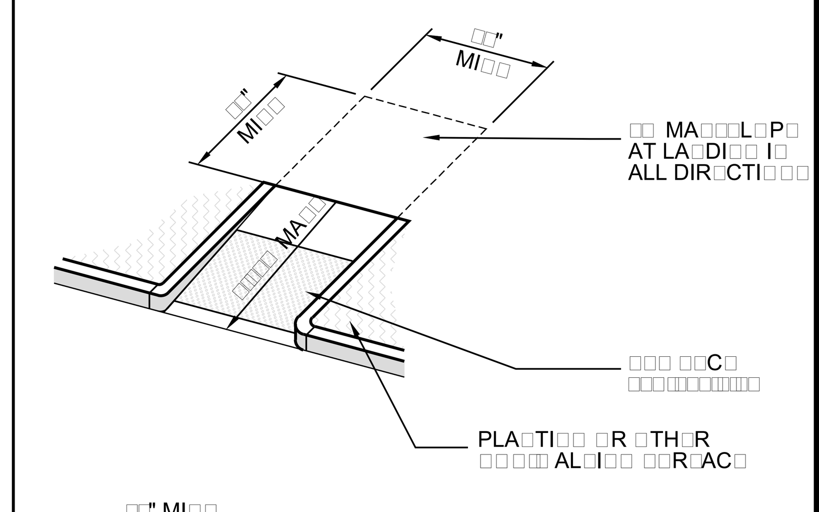

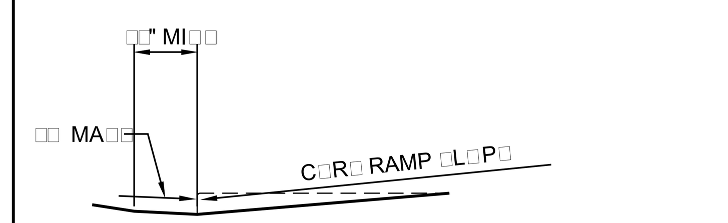

C□□□T□R □L□P□ □□ □□R□AC□□ AD□AC□□T T□ C□R□ RAMP□

C□R□ RAMP D□TAIL

ALL TRA□□IC □I□□□ □HALL □□ □A□□D □□ ACR□LIC P□L□□R□THA□□ □□ □□C□PRIM□R □□ AL□M□, □□RI□□ □ □CIT□ □RD□

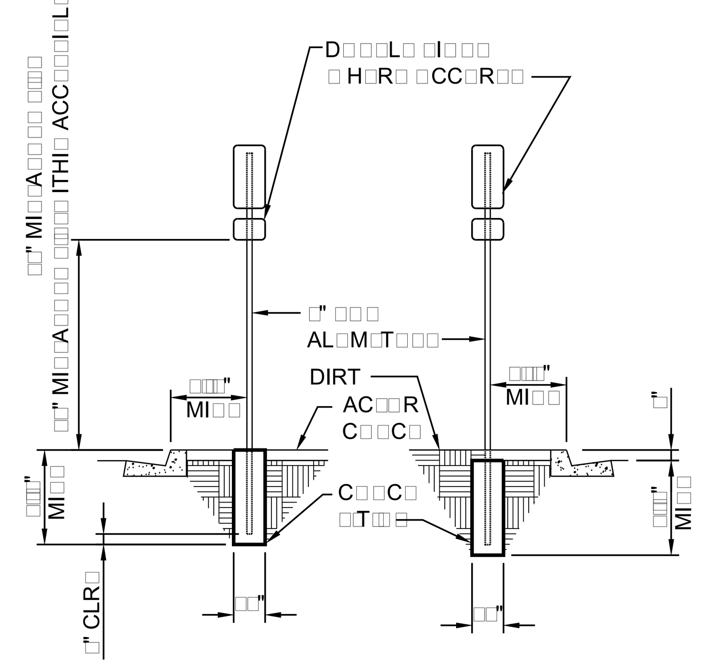

PA□□D AR□A□ PLA□T□D AR□A□

P□□T□D TRA□□IC □I□□

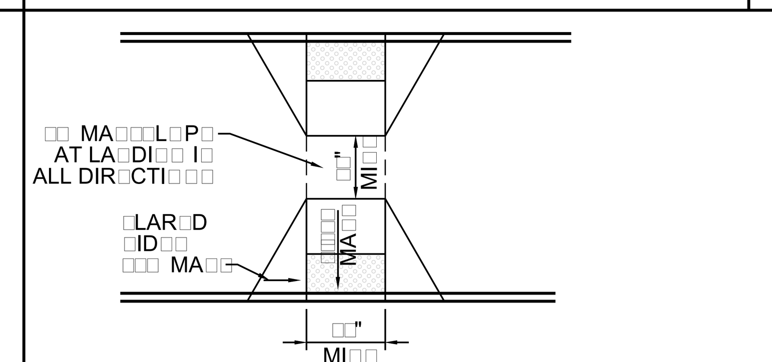

C□R□ RAMP AT I□LA□D

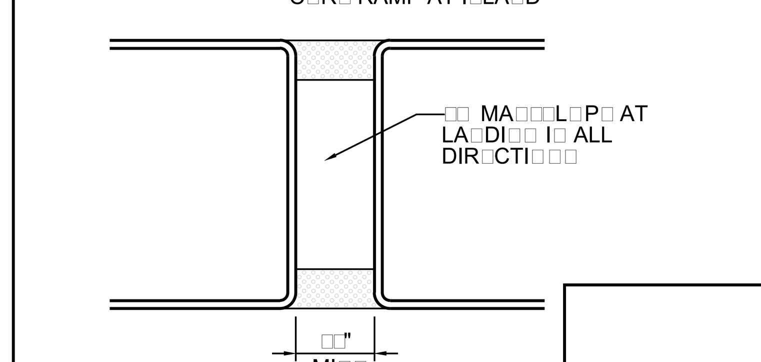

C□T THR□□□H AT I□LA□D

I□LA□D□ I□ CR□□□I□□□

C□R□ D□TAIL

This Document, Either as Drawing or the Assemblage of Electronic Data, is the Property of Commerce Construction Co., L.P. ("Commerce")

C□MM□RC□ C□□□TR□CTI□□ C□□,L.P□
□□□□□ Cr□□□r□ad□Par□□a□□□rth
□i□th □l□□r
Cit□□□Indu□tr□, Cali□□rnia □□□□□□□□□□
Tele□h□ne □□□□□□□□□□□□□□
Licen□e □□□□□□□□□□

TITL□ □□ □TA□DARD D□TAIL□
□□ILDI□□ A
MA□□□TIC □AD□□R L□□I□TIC□ C□□T□R
CTH "H" □ILLA□□ □□ PL□A□A□T PRAIRI□, □I

Dra□in□ Pl□t □ar

DRA□□ □□ DAT□
CCC □□□ □□□
□H□□T □□□
T□□□

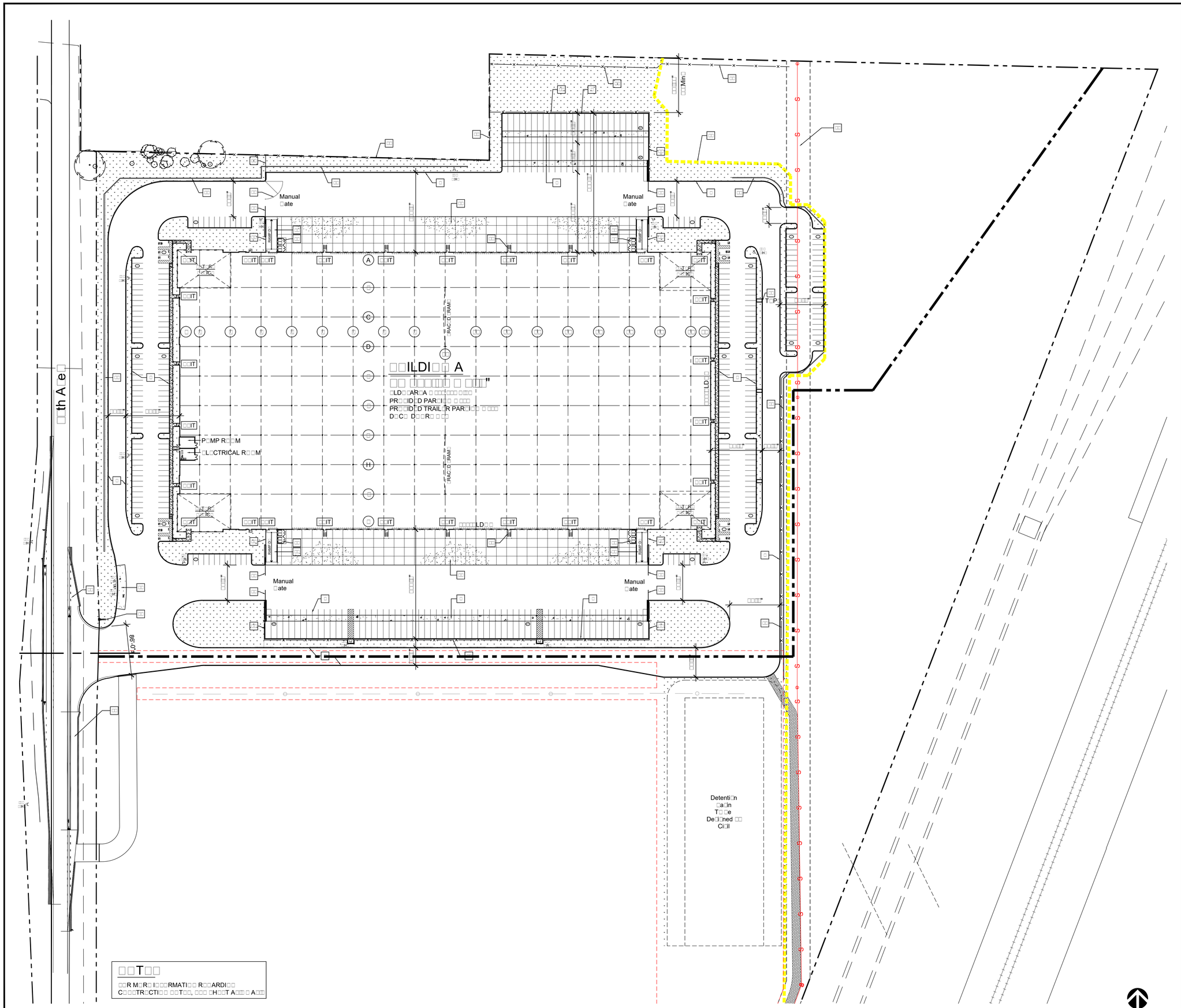

SITE LEGENDS

HA DICAPP D PAR PAC
TRA H CL R
P T I DICAT R AL
IR PRI L R RI R
C CTI C TR L AL
LI HT TA DARD
IR H DRA T
I TI IR H DRA T
P P T D
C TR CTI T
TR T LI HT TH R
C TR CTI T
PP T I P R P L P R
C IL D
LA D CAP D AR A
TRIP D AR A
C CR T PA I P R
C IL D
A PHALTIC C CR T PA I
P R C IL D
C C AL R TAR H
C C RAMP M D R M
MI C C LA
TRA RM R PAD
C CR T AL
C IL D
C R T AI ALL
C IL D
PAR PAC
R LA D
C R LA D
PAR PAC
D R A L
I T R MAI
CATCH A
PLA H L C
PIP ARD
D P T
A M T R
T RM DRAI
R LI
AT R LI
IR MAI
D LIT TA DARD
L CTRICAL D
LIT TA DARD
L CTRICAL D
RD R DRAI
D R L DRAI
CID CA T IR D P T
PR ID TAMP R
ITCH ILDI
TRA C
M IT R D AT
MI IR ACC
T A IT
C T PA L
PP P R P L
R
P C PIP T C R
AD
CATCH A
A IR ACC
T A IT
C T PA L
PP P R P L

T

MI IR ACC R AD H A

H IR H DRA T L CATI
CI IL D

A
A
A
A

PLA

T

R M R I RMATI R ARDI
C TR CTI T, H T A A

MA T R IT PLA

CAL

A

C MM RC C TR CTI C L P
Cr rad Par a th
Cli Indu tr Cali mia
Tele h ne
Licen e

MA T R IT PLA
ILDI A
MA TIC AD R L I TIC C T R
CTH "H" ILLA PL A T PRAIRI , I

Dra in Pl 1 ar
DRA DAT
D
CCC

H T
A

This Document, Either in Drawing or Electronic Form, is the Property of Ames Construction Co. L.P. ("Construction") and may not be used by any person or entity for any purpose or in any form, in a manner or to a extent, not expressly authorized by Construction. This document is a trade secret of the Texas Uniform Trade Secrets Act, Sec. 134A.001 et seq. of the Texas Business and Commerce Code and shall be treated as such. Any use, in any manner, of this document or any part thereof, without the written consent of Construction, is prohibited. Any person or entity who obtains this document agrees to be bound by the foregoing restrictions and to return this document upon request of Construction. Any person or entity who uses this document in a manner not authorized by Construction agrees to pay Construction all damages, costs and expenses incurred by Construction as a result of such use.

DAT
R
DAT
R
R

This Document, Either as Drawing or the Assemblage of Electronic Data, is the Property of Commerce Construction Co., L.P. ("Commerce")
without the written consent of Commerce. This document
without warranty of any kind either expressed or implied.
and completeness. Commerce is not responsible for
document. The acceptance or use of this document will
RAMP D
Manual
ELECTRICAL ROOM
A
CTH "H"
A Architectural

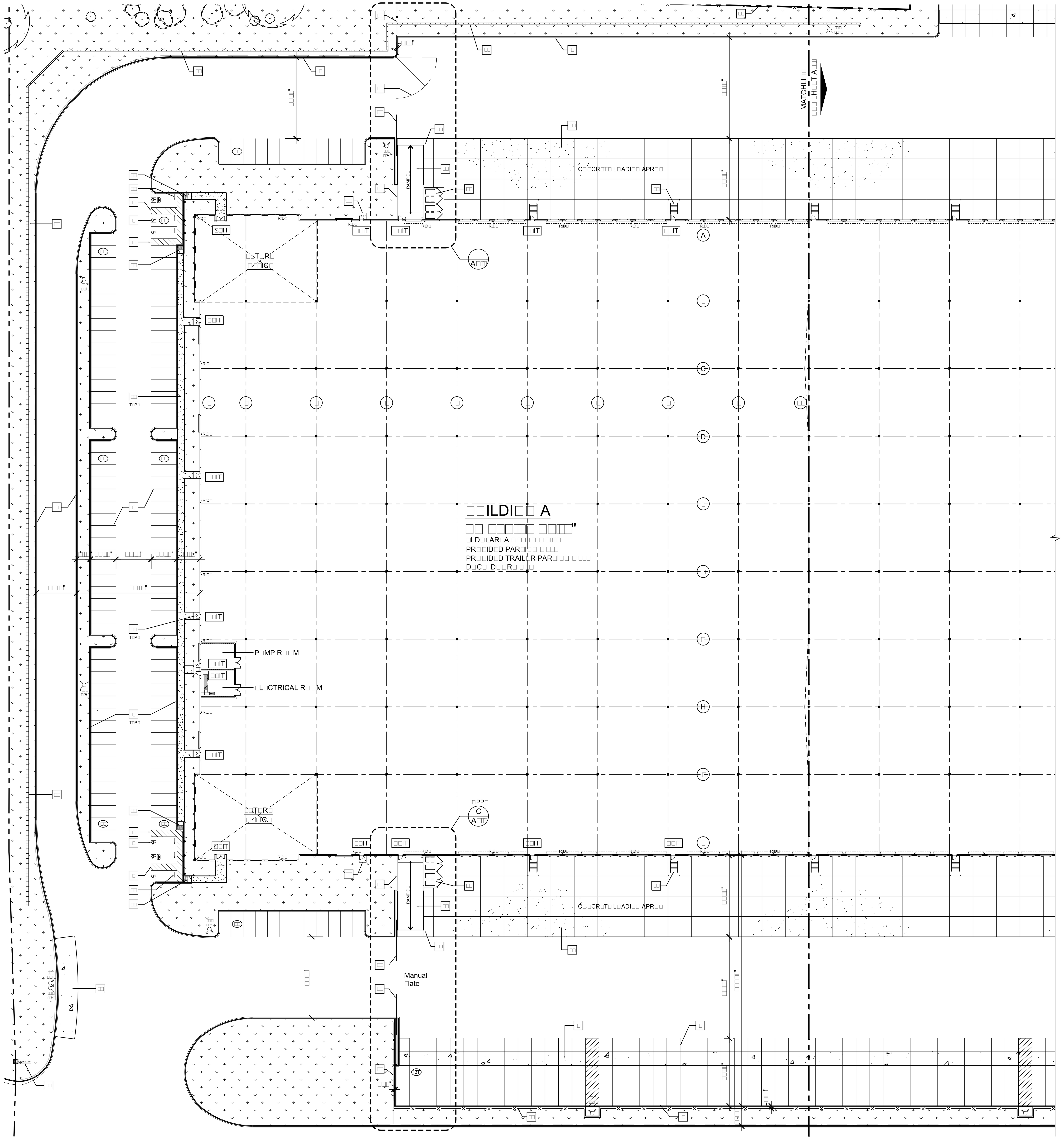

PARTIAL □IT□ PLA□

□CAL□□ □" □ □□□□" A

C□□□TR□CTI□□ □□T□□

□	C□□□TR□CT T□P□□□ D□□R□□ HA□DICAPP□D □TALL P□R D□TAIL □/T□□□
□	PAI□T □TALL □TRIPI□□ □□ PA□□M□□T P□R C□□□T□ D□TAIL□
□	PAI□T HCP □A□ ACC□□□I□L□ L□ADI□□ AR□A □□□" MI□□
□	C□□□TR□CT P□□T□D HA□DICAP □I□□ P□R □LD□□C□D□, A□D P□R D□TAIL □/T□□□
□	C□□□TR□CT RI□□□□ □□TT□R □ □C□□CR□T□ C□R□ P□R CI□IL DRA□I□□□
□	C□□□TR□CT P□□T□D "□T□P" TRA□□IC □I□□ P□R DTL□ □□/AD□ A□D P□R CI□IL D□ □□□
□	□T□P □I□□ A□D □T□P □AR, □□□ D□TAIL □□/AD□
□	□□□" □ ID□ R□I□□□RC□D C□□CR□T□ D□LL□ PAD□□□□ CI□IL DRA□I□□□□
□	□□□" □TRIP□D HA□DICAP □AL□
□□	C□□CR□T□ □ID□□ AL□ □□□" MI□□□ □□" THIC□ C□□CR□T□ □ITH A □R□□M □I□I□H □□□R □" □□ □T□□□ □A□□□
□□	TA□ C□MPLAI□T C□R□ RAMP □□□□ □L□P□ □MA□□T□P□
□□	C□□C□L□ADI□□ APR□□,□□□ D□TAIL □□/AD□, □□□ □TR□D□ □□□□ CI□IL D□ □□□
□□	□" THIC□ C□□C□□T□□P □□I□□□□□" □ □□□" D□, □□□ D□TAIL □/AD□
□□	□□ARD P□□T, □□□ D□TAIL □□/AD□
□□	□□T□RI□R □TAIR□, □□□ D□TAIL □/AD□
□□	RAMP□, □□□ □H□□T A□□
□□	□H□□L □T□P P□R D□TAIL □□/AD□
□□	□□□" MI□□C□□CR□T□ □ID□□ AL□
□□	PR□CA□T C□□CR□T□ PA□□L
□□	□IR□ H□DRA□T, □□□ CI□IL D□ □□□
□□	LI□HT □TA□DARD□, □□□ □L□CTRICAL D□ □□□ A□D □□□ ARCH□D□ □□D□TAIL □□/AD□
□□	PR□□ID□ MA□□AL CHAI□LI□□ □LIDI□□ □AT□
□□	PR□□ID□ □□□□" □IDTH □□I□□ □AT□
□□	□□□ □□□" HI□H CHAI□LI□□ □□□C□, □□□ D□TAIL □/AD□
□□	M□□□M□□T □I□□, □□□ D□TAIL □/AD□
□□	□□□ ACC□L□RATI□□ LA□□
□□	□□□ D□C□L□RATI□□ LA□□
□□	□L□□DPLAI□ L□CATI□□
□□	□A□ITAR□ □□□ □R □A□□M□□T L□CATI□□
□□	P□MP□R PAD, □□□ CI□IL D□ □□□
□□	R□TAI□I□□ □ALL P□R CI□IL D□ □□□
□□	□□I□TI□□ CHAI□LI□□ □□□C□
□□	TRA□H □□CL□□□R□, □□□ D□TAIL □/AD□
□□	PR□P□□□D C□□CR□T□ □L□M□ □T□P□

□□T□□
□□R M□R□ I□□□RMATI□□ R□□ARDI□□ □RADI□□ PLA□, □□□ CI□IL DRA□I□□□ □H□□T C□□ □ C□□

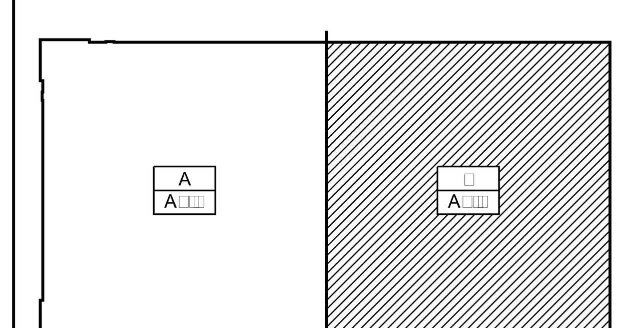

□□□PLA□

This Document, Either as Drawing or the Assemblage of Electronic Data, is the Property of Commerce Construction Co., L.P. ("Commerce"). Thi□ d□cu□ent, includin□ all electr□nic data attached therein, □a□ n□t □e re□r□duced, di□tri□uted, □□dified, u□ed □r i□□le□ented in an□ □a□ in □h□le □r in □art, without the written consent of Commerce. This document □hall n□t □e ta□en a□ a□□urtenant t□, a□□□ciated □ith, □r a□ a re□lace□ent □□r the □□□icial □ealed d□cu□ent, and i□ without warranty of any kind either expressed or implied. An□ □er□□n □r □r□ani□ati□n □ a□in□ u□e □□□r rel□in□ u□□n thi□ d□cu□ent i□ re□□□n□i□le □□r c□n□ir□in□ it□ accurac□ and completeness. Commerce is not responsible for edited □r re□r□duced □er□i□n□ □□ di□ital data □□□ thi□ document. The acceptance or use of this document will □e c□n□trued a□ an acce□tance □□ the □re□i□□□.

DAT□ | □□ | R□□I□I□□ | DAT□ | □□ | R□□I□I□□

C□MM□RC□ C□□□TR□CTI□□ C□,L.P□
□□□□□ Cr□□□r□ad □ Par□□a□ □□rth
□i□th □l□□r
Cit□ □□ Indu□tr□, Cali□□rnia □□□□□□□□□
Tele□h□ne □□□□□□□□□□□□□
Licen□e □□□□□□□□□

PARTIAL □IT□ PLA□

□□ILDI□□ A
MA□□□TIC □AD□□R L□□I□TIC□ C□□T□R
CTH "H" □ILLA□□ □□ PL□A□A□T PRAIRI□, □I

Dra□in□ Pl□t □ar
□" □"
□□e thi□ □□t □ar t□ c□n□ir□ dra□in□ ha□ n□t □een reduced □r enlar□ed □r□□ □ri□inal□ I□ thi□ □□t □ar i□ n□t e□actl□ □ inch l□n□ the □h□□ical □i□e □□ dra□in□ ha□ chan□ed□

DRA□ □ □□ D□ □□□ DAT□ □□□□□□□□

CCC □□□ □□□ □□□□□

□H□□T □□□
A□□□

□□A□□ Architectural□□□□□□□M□LC □ld□A Architectural□□□□□□□A□□□□d□□

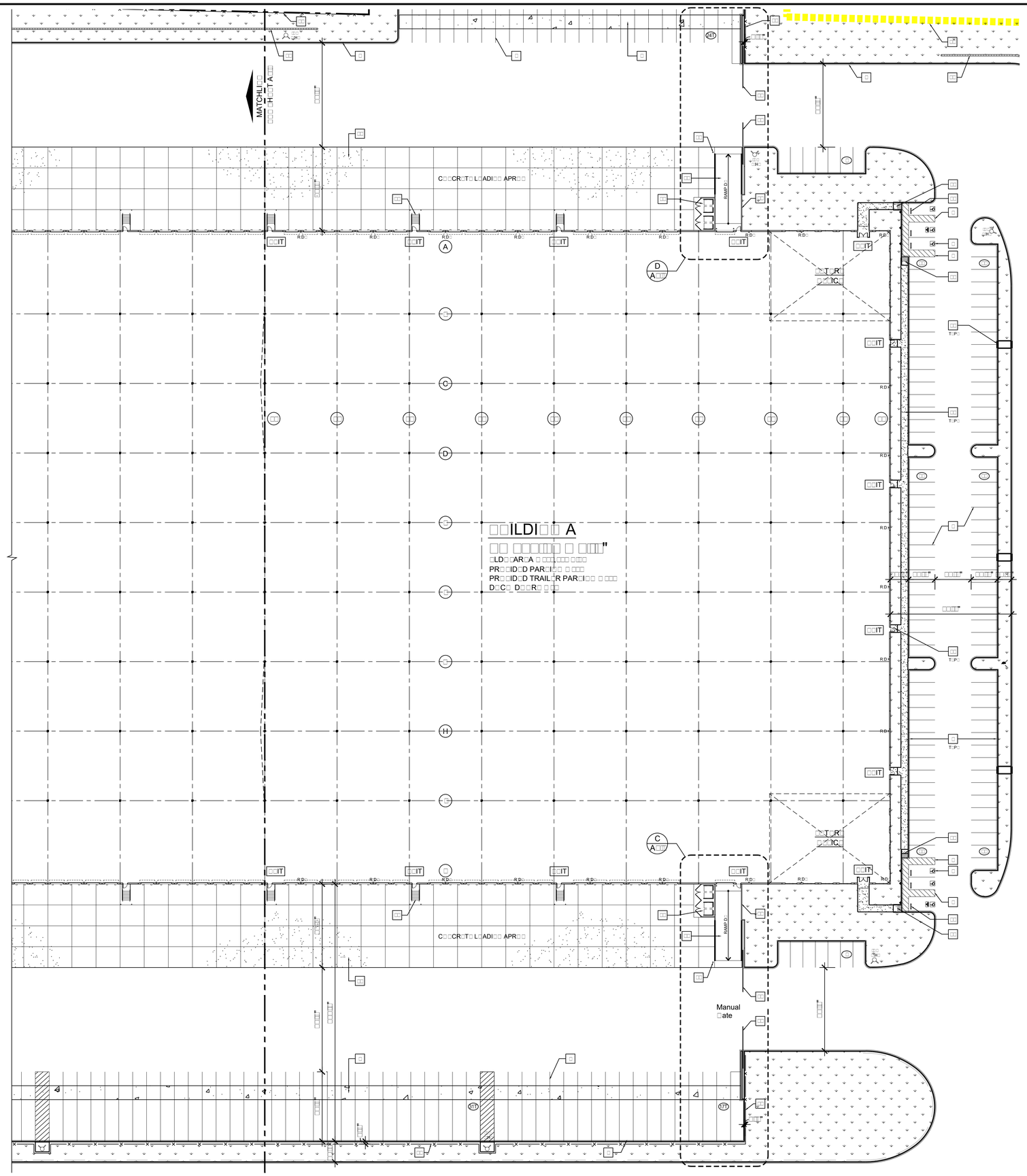

PARTIAL □IT□ PLA□

□CAL□□
□" □ □□□□"

C□□□TR□CTI□□ □□T□□

- C□□□TR□CT T□P□□□D□□R□□ HA□DICAPP□D □TALL P□R D□TAIL (T□□)
- PAI□T □TALL □TRIPI□□ □□ PA□□M□□T P□R C□□□T□ D□TAIL□
- PAI□T HCP □A□ ACC□□□□L□□L□ADI□□ AR□A □□□□" MI□□
- C□□□TR□CT P□□T□D HA□DICAP □I□□ P□R □LD□□C□D□, A□D P□R D□TAIL (T□□)
- C□□□TR□CT RI□□□□ □□TT□R □ □C□□CR□T□ C□R□ P□R CI□IL DRA□ I□□□
- C□□□TR□CT P□□T□D "□T□P" TRA□□IC □I□□ P□R DTL□ (AD□) A□D P□R CI□IL D□ □□□
- □T□P □I□□ A□D □T□P □AR, □□□ D□TAIL (AD□)
- □□□□" □ ID□ R□□□□RC□D C□□CR□T□ D□LL□ PAD□□□□ CI□IL DRA□ I□ □□□
- □□□" □TRIP□D HA□DICAP □ AL□
- C□□CR□T□ □ID□□ AL□ □□□" MI□□ □□" THIC□ C□□CR□T□ □ ITH A □R□□M □□□H □□□R □" □□ □T□□□ □A□□□
- TA□ C□MPLAI□T C□R□ RAMP □□□ CL□P□ □MA□□T□P□□
- C□□C□L□ADI□□ APR□□,□□□ D□TAIL (AD□), □□□ CTR□D□ □ □□□ CI□IL D□ □□□
- □" THIC□ C□□C□□T□□P □□□□□□" □ □ □□□" D□ □□□ D□TAIL (AD□)
- □□ARD P□□T, □□□ D□TAIL (AD□)
- □□T□RI□R □TAIR□, □□□ D□TAIL (AD□)
- RAMP□, □□□ □H□□T A□□
- □ H□□L □T□P P□R D□TAIL (AD□)
- □□□" MI□□C□□CR□T□ □ID□□ AL□
- PR□CA□T C□□CR□T□ PA□□L
- □IR□ H□DRA□T, □□□ CI□IL D□ □□□
- LI□HT □TA□DARD□, □□□ □L□CTRICAL D□ □□□ A□D □□□ ARCH□D□ □□D□TAIL (AD□)
- PR□□ID□ MA□□AL CHAI□LI□□ □LIDI□□ □AT□
- PR□□ID□ □□□□" □ IDTH □□ I□□ □AT□
- □□□ □□□" HI□H CHAI□LI□□ □□□C□, □□□ D□TAIL (AD□)
- M□□□M□□T □I□□, □□□ D□TAIL (AD□)
- □□□ ACC□L□RATI□□ LA□□
- □□□ D□C□L□RATI□□ LA□□
- □L□□DPLAI□ L□CATI□□
- □A□ITAR□ □□□ □R □A□□M□□T L□CATI□□
- P□MP□R PAD, □□□ CI□IL D□ □□□
- R□TAI□I□□ □ ALL P□R CI□IL D□ □□□
- □□□TI□□ CHAI□LI□□ □□□C□
- TRA□H □□CL□□□R□, □□□ D□TAIL (AD□)
- PR□P□□□D C□□CR□T□ □L□M□ □T□P□□

□□T□□:
□□R M□R□ I□□□RMATI□□
R□□ARDI□□ □RADI□□ PLA□, □□□ CI□IL DRA□ I□□□ □H□□T C□□ □ C□□

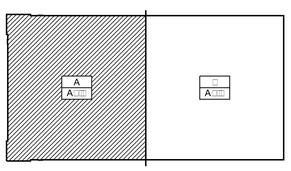

□□□PLA□

This Document, Either in Drawing or Electronic Assembly, Is Property of Hensel Phelps Construction Co. LP ("Contractor").
Contractor Retains All Ownership Rights, Including Copyright, Thereto. It Is Unlawful to Copy, Use, Or Disclose Any Part Thereof Without the Written Consent of Contractor. This Notice Must Be Affixed to Any Permitted Copy. Contractor Makes No Warranty Of Any Kind, Express or Implied, Including Without Limitation Any Implied Warranty of Fitness for a Particular Purpose or Merchantability, Or Any Warranty Of Accuracy, Completeness, Or Sufficiency Of Any Information Contained Herein. The Information Contained Herein Is Subject to Change Without Notice.

		DAT□
		□□
		R□□□□□
		DAT□
		□□
		R□□□□□

C□MM□RC□ C□□□TR□CTI□□ C□□LP□
□□□□ Cr□□□r□ad□Par□□a□□□□□□□□□
□□th □□□r
Cit□□Indu□tr□ Cali□mia □□□□□□□□□□
Tele□h□ne □□□□□□□□□□□□
Licen□e □□□□□□□□□

PARTIAL □IT□ PLA□

□□ILDI□□ A

MA□□□TIC □AD□□R L□□□□TIC□ C□□T□R

CTH "H" □ILLA□□□□PL□A□T PRAIRI□, □ I

Dra□in□ Pl□t □ar

□□ th□□□□ar □□□□□□ dra□in□ ha□□□□ been reduced □r enlarged □□□□ □riginal □□□□□□□□ □ar □□□□ ed□□□□ □ inch □n□ the □□□□ual □□□ dra□in□ ha□ chan□□□

DRA□ □ □□ DAT□
D□ □□□ □□□□□□

CCC □□□ □□□
□□□□□

□H□□T □□□

A□□□

□A□□Architectural□□□□□□M□LC□Rd□□A□Architectural□□□□□□A□□□□d□□

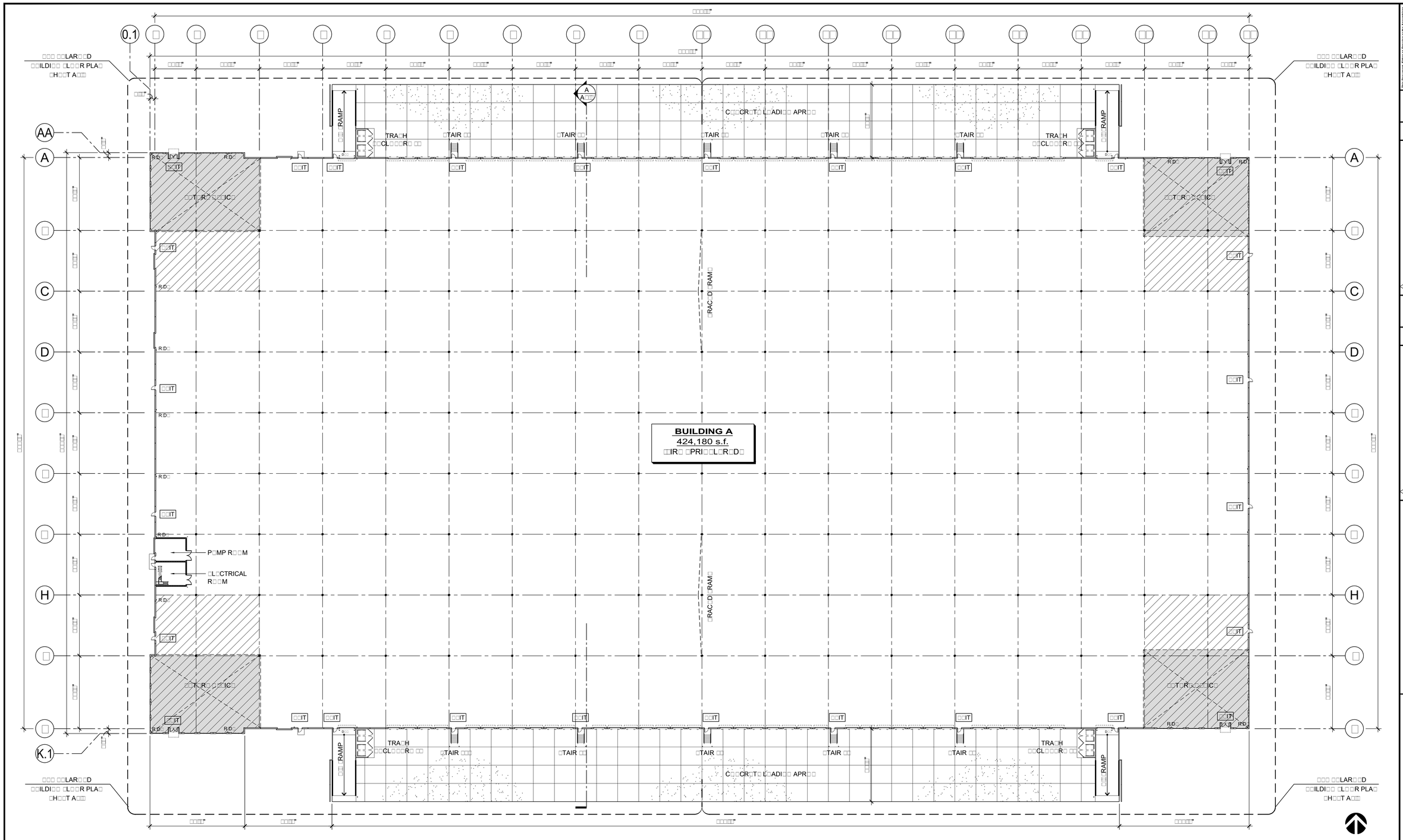

□□□RALL □□ILDI□□ □L□□R PLA□ | □CAL□□ □" □ □□□□" | A

C□□□TR□CTI□□ □□T□□□

□□ PAI□T ALL I□T□RI□R □ ALL□ □ ITH □□□ □□C□AT □□ MILL □ HIT□ T□ C□□□R A□D PAI□T ALL C□L□M□□ □□LL□□ T□ □□□□" HI□H□

□□ PAI□T□D ALL □□T□RI□R □ ALL□ □□ TH□ □□ILDI□□ □ ITH □□□ □□C□AT □□ PRIM□R A□D □□□ □□C□AT □□ ACR□LIC □LAT PAI□T□

□□ PAI□T C□□CR□T□ □ILL□D □T□□L □□LLARD□ □A□□T□ □□LL□□ □

□□ ALL □□ARD P□□T□ □□R □IR□ H□DRA□T□ A□D P□I□□ □HALL □□ PR□□ID□D A□D I□□TALL□D □□ TH□ □IR□ □PRI□□L□R C□□TRACT□R□

□□ ALL C□□CR□T□ □ AL□□ □HALL □□ □C□R□D A□ □H□□ □ □□□ALL□ □PAC□D□□ ITH A R□TAR□ □I□□H □□C□PT HA□DICAP RAMP□ □ HICH □HALL HA□□ A M□DI□M □R□□M □I□□H P□RP□□DIC□LAR T□ □L□P□□

□□ APPL□ □□□ □□C□AT □□ A□H□□RD □L□□R □□AL□R T□ ALL □ AR□H□□□□ A□D □□T□R□ □□□IC□ □L□□R AR□A□

□□ ALL □□IT D□□R□ T□ □□ □□□IPP□D □ ITH L□C□□□T □P□□A□L□ □R□M I□□ID□ □ ITH□□T □□□ □□ □□□ □R A□□ □P□CIAL □□□□ L□D□□ □R □□□□RT□ □□T□RI□R □□□□D□

□□ PR□□ID□ □□MIL□□T□□□ □ RAP □AP□R □ARRI□R □□D□R □LA□ AT L□CATI□□□ I□DICAT□ □□ PLA□□

□□ □□R □L□□R PA□□□□□□□ R□□□□RC□D C□□CR□T□ CRIT□RIA □ ITH □" THIC□ R□I□□□RC□D C□□CR□T□ □LA□□ □□R M□R□ I□□□□ □□□ □TR□CT□RAL DRA□ I□□□

□□□ C□□RDI□AT□ ALL □I□I□H□D DIM□□□I□□□ □ ITH D□TAIL□ R□□□R□□C□D □□ PLA□□

□□□ □□□ D□□R □CH□D□L□ □□ □H□□T A□□

□□□ □□□ □ I□D□□ T□P□□ □□ □H□□T A□□

□□□□RAL □□□□□T□□□

□□□	D□□R ID□□TI□ICATI□□, □□□ D□□R □CH□D□L□ □□ □H□□T A□□
□□IT	□□IT □I□□ □I□□ □□ILDI□□ □L□□R PLA□□
□ □	□ I□D□□ ID□□TI□ICATI□□, □□□ □ I□D□□ T□P□□ □□ □H□□T A□□
R:D□	R□□□ DRAI□ L□CATI□□ □ □ □I□I□H □L□□R
	□□T□□T □ □T□□□ □ RAP □ARRI□R □□D□R □LA□ A□D □□□ □□T□□ □ □
	□□T□R□ □□□IC□ AR□A

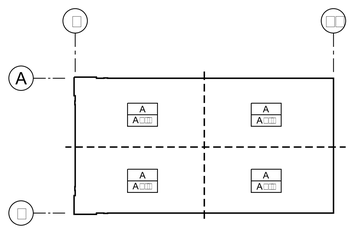

□□□PLA□

This Document, Either in Drawing or the Assembly, is the Property of Hensel Phelps Construction Co. L.P. ("Contractor") and is to be used only with respect to this Project. Reuse, in whole or in part, of this Document without the written consent of Contractor. This Document is to be returned to Contractor upon request and in any event upon completion of the Project. Any and all rights in and to this Document, including but not limited to all copyrights, are hereby reserved by Contractor. Notwithstanding the foregoing, Owner shall have a limited, non-exclusive, irrevocable license to use this Document for the Project, provided (1) Owner performs in accordance with its obligations under its agreement with Contractor, and (2) Owner and all persons and entities acting by, through, or under Owner agree that their use of this Document shall be subject to and governed by the terms and conditions of this notice.

DAT□	
R□□□□□	
DAT□	
R□□□□□	

C□MM□RC□ C□□□TR□CTI□□ C□□LP□
□□□□Cr□□□ad□Par□□a□□□rth
□□th □□□r
Cit□□□Indu□tr□, Cali□□mia □□□□□□□□
Tele□h□ne □□□□□□□□□□□□
Licen□e □□□□□□□□

□□□RALL □□ILDI□□ PLA□

□□ILDI□□ A

MA□□□TIC □AD□□R L□□I□TIC□ C□□T□R

CTH "H" □ILLA□□ □□PL□A□A□T PRAIRI□, □ I

Dra□in□ Pl□t □ar

□e th□ □□□ar □□ □□□in□ dra□in□ ha□ n□t □een reduced □r enlarged □□□ original □□□ □□□ar □□□□ □ e□ad□□□ □□ inch □□□ the □□□□al □□□ □dra□in□ ha□ chan□ed.

DRA□ □ □□ DAT□
D□ □□□ □□□□□□

CCC □□ □ □□□
□□□□□□

□H□□T □□□

A□□□

□A□□Architectural□□□□□□M:LC □d□□A:Architectural□□□□□□A□□□□□d□□

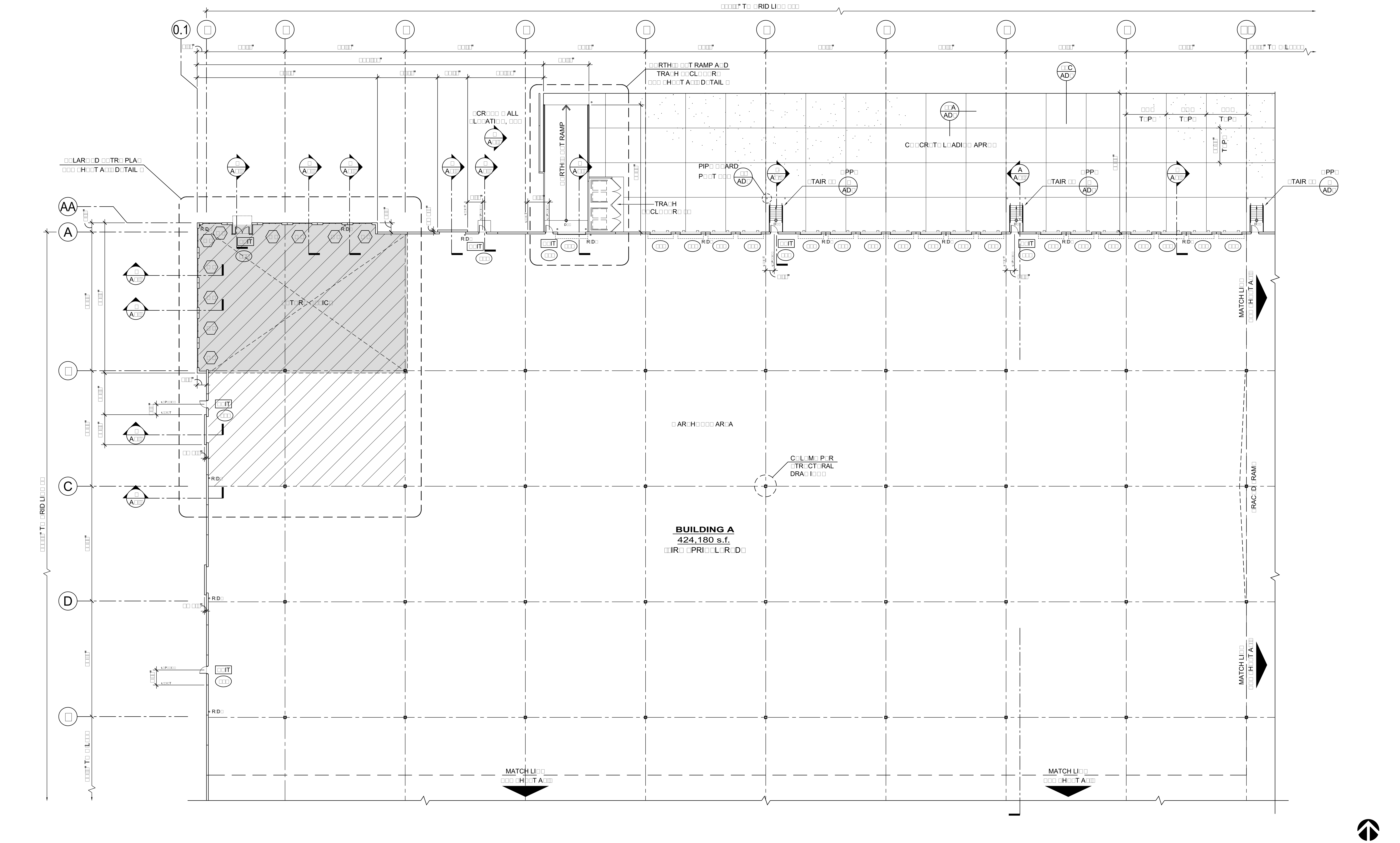

PARTIAL □□LAR□□D □□ILDI□□ □L□□R PLA□

□CAL□□ □□□□" □ □□□□"

A

C□□□TR□CTI□□ □□T□□□

1. PAI□T ALL I□T□RI□R □ALL□ □ITH □□□ □□□C□AT □□ MILL □HIT□ T□ C□□□R A□D PAI□T ALL C□L□M□□ □□LL□□ T□ □□□□" HI□H□
2. PAI□T□D ALL □□T□RI□R □ALL□ □□ TH□ □□ILDI□□ □ITH □□□ □□□C□AT □□ PRIM□R A□D □□□ □□□C□AT □□ ACR□LIC □LAT PAI□T□
3. PAI□T C□□CR□T□ □ILL□D □T□□L □□LLARD□ □A□□T□ □□LL□□ □
4. ALL □□ARD P□□T□ □□R □IR□ H□DRA□T□ A□D PI□□□ □HALL □□ PR□□ID□D A□D I□□TALL□D □□ TH□ □IR□ □PRI□□L□R C□□TRACT□R□
5. ALL C□□CR□T□ □AL□□ □HALL □□ □C□R□D A□ □H□□□ □□□□ALL□ □PAC□D□□ ITH A R□TAR□ □I□I□H □□C□PT HA□DICAP RAMP□ □HICH □HALL HA□□ A M□DI□M □R□□M □I□I□H P□RP□□DIC□LAR T□ □L□P□□
6. APPL□ □□□ □□□C□AT □□ A□H□□RD □L□□R □□AL□R T□ ALL □AR□H□□□□ A□D □□T□R□ □□□IC□ □L□□R AR□A□
7. ALL □□IT D□□R□ T□ □□ □□□IPP□D □ITH L□C□□□T □P□□A□L□ □R□M I□□ID□ □ITH□□T □□□ □□ □□□ □R A□□ □P□CIAL □□□□ L□D□□ □R □□□□RT□ □□T□RI□R □□□□D□
8. PR□□ID□ □□MIL□□T□□□ □RAP □AP□R □ARRI□R □□D□R □LA□ AT L□CATI□□□ I□DICAT□ □□ PLA□□
9. □□R □L□□R PA□I□□ □□□□ R□I□□□RC□D C□□CR□T□ CRIT□RIA □ITH □" THIC□ R□I□□□RC□D C□□CR□T□ □LA□□ □□R M□R□ I□□□□, □□□ □TR□CT□RAL DRA□I□□□
10. C□□RDI□AT□ ALL □I□I□H□D DIM□□□I□□□ □ITH D□TAIL□ R□□□R□□C□D □□ PLA□□
11. □□□ D□□R □CH□D□L□ □□ □H□□T A□□
12. □□□ □I□D□□ T□P□□ □□ □H□□T A□□

□□□□RAL □□□□□T□□□

□□□	D□□R ID□□TI□ICATI□□, □□□ D□□R □CH□D□L□ □□ □H□□T A□□
□□IT	□□IT □I□□ □□□□ □□ILDI□□ □L□□R PLA□□
□□	□I□D□□ ID□□TI□ICATI□□, □□□ □I□D□□ T□P□□ □□ □H□□T A□□
R□D□	R□□□ DRAI□ L□CATI□□ □ □I□I□H □L□□R
(hatched)	□□T□□T □□ □T□□□ □RAP □ARRI□R □□D□R □LA□ A□D □□□ □□T□□ □□
(shaded)	□□T□R□ □□□IC□ AR□A

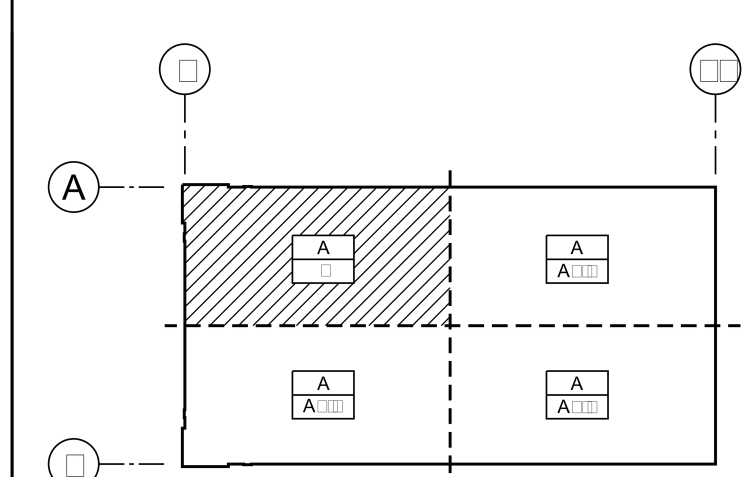

□□□PLA□

This Document, Either as Drawing or the Assemblage of Electronic Data, is the Property of Commerce Construction Co., L.P. ("Commerce"). Commerce is not responsible for edited or reproduced documents. The acceptance or use of this document will be construed as an acceptance of the terms.

C□MM□RC□ C□□□TR□CTI□□ C□,L.P□
Cr□□rad□ Par□a□□rth
Cit□ □□Indu□tr□, Cali□□rnia
Tele□h□ne
Licen□e

PARTIAL □□LAR□□D □□ILDI□□ PLA□

□□ILDI□□ A
MA□□□TIC □AD□□R L□□I□TIC□ C□□T□R
CTH "H" □ILLA□□ □□ PL□A□A□T PRAIRI□, □I

DRA□ □ □□ DAT□
CCC □□□ □□□
□H□□T □□□
A□□□

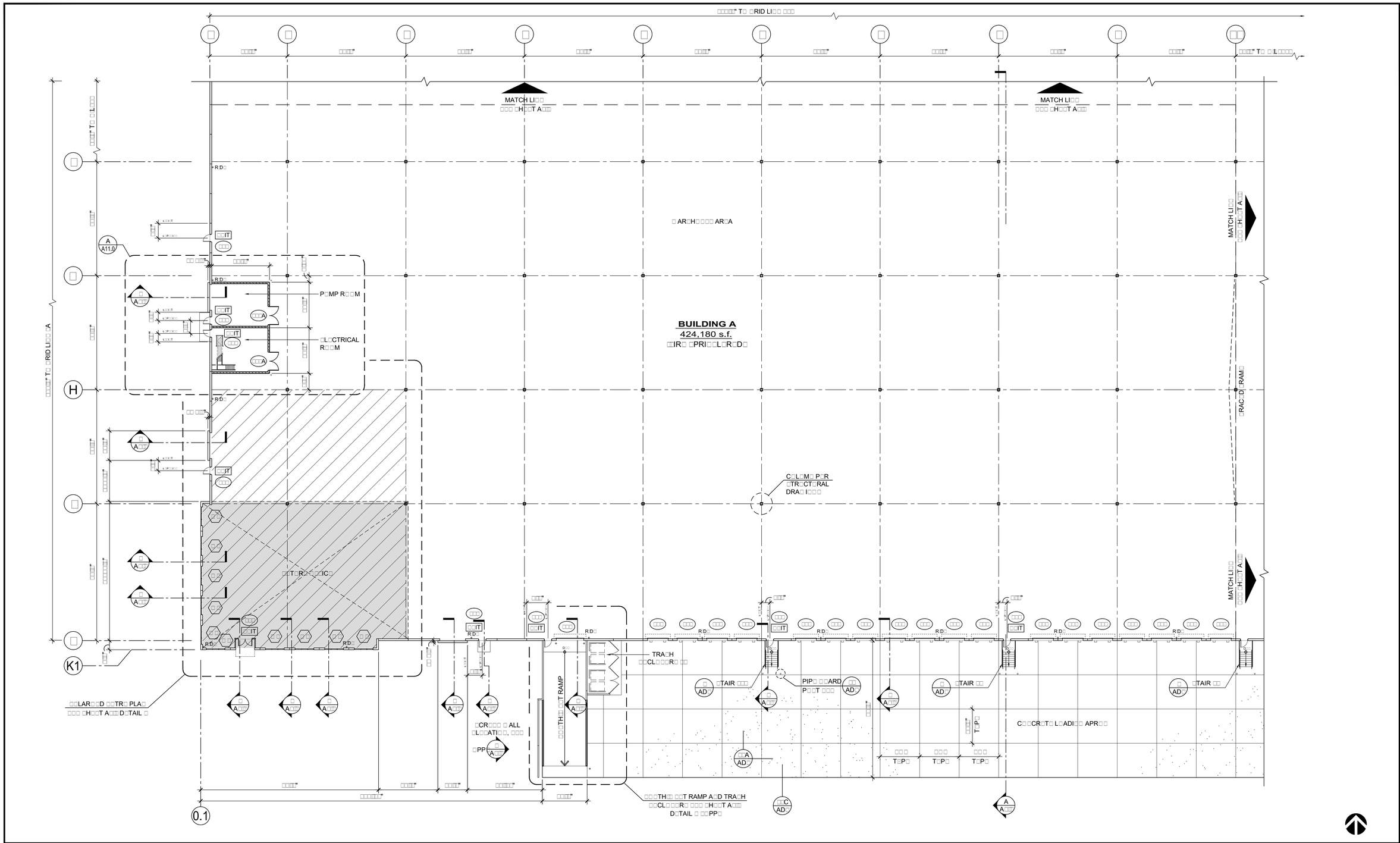

PARTIAL □□LAR□□D □□ILDI□□ □L□□R PLA□

□CAL□□
□□□" □ □□□"
A

C□□□TR□CTI□□ □□T□□□

□□ PAI□T ALL I□T□RI□R □ ALL□ □ ITH □□□ □□C□AT □□ MILL □ HIT□ T□ C□□□R A□D PAI□T ALL C□L□M□□ □□LL□□ T□ □□□□" HI□H□

□□ PAI□T□D ALL □□T□RI□R □ ALL□ □□ TH□ □□ILDI□□ □ ITH □□□ □□C□AT □□ PRIM□R A□D □□□ □□C□AT □□ ACR□LIC □LAT PAI□T□

□□ PAI□T C□□CR□T□ □LL□D □T□□L □□LLARD□ □A□□T□ □□LL□□ □

□□ ALL □□ARD P□□T□ □□R □IR□ H□DRA□T□ A□D P.I□□□ □HALL □□ PR□□ID□D A□D I□□TALL□D □□ TH□ □IR□ □PRI□□L□R C□□TRACT□R□

□□ ALL C□□CR□T□ □ AL□□ □HALL □□ □C□R□D A□ □H□□ □ □□□ALL□ □PAC□D□□ ITH A R□TAR□ □I□□H □□C□PT HA□DICAP RAMP□ □ HICH □HALL HA□□ A M□D□M □R□□M □I□□H P□RP□□DIC□LAR T□ □L□P□□

□□ APPL□ □□□ □□C□AT □□ A□H□□RD □L□□R □□AL□R T□ ALL □ AR□H□□□□ A□D □□T□R□ □□□IC□ □L□□R AR□A□

□□ ALL □□IT D□□R□ T□ □□ □□□IPP□D □ ITH L□C□□□T □P□□A□L□ □R□M I□□ID□ □ ITH□□T □□□ □□ □□□ □R A□□ □P□CIAL □□□□ L□D□□ □R □□□□RT□ □□T□RI□R □□□□D□

□□ PR□□ID□ □□MIL□T□□□ □ RAP □AP□R □ARRI□R □□D□R □LA□ AT L□CATI□□□ I□DICAT□ □□ PLA□□

□□ □□R □L□□R PA□I□□□□□ R□I□□□ RC□D C□□CR□T□ CRIT□RIA □ ITH □" THIC□ R□I□□□ RC□D C□□CR□T□ □LA□□ □□R M□R□ I□□□□ □□□ □TR□CT□RAL DRA□ I□□□

□□□ C□□RDI□AT□ ALL □I□I□H□D DIM□□□I□□□ □ ITH D□TAIL□ R□□□R□□C□D □□ PLA□□

□□□ □□□ D□□R □CH□D□L□ □□ □H□□T A□□

□□□ □□□ □ I□D□□ T□P□□ □□ □H□□T A□□

□□□□RAL □□□□□T□□□

□□□	D□□R ID□□TI□ICATI□□, □□□ D□□R □CH□D□L□ □□ □H□□T A□□
□□IT	□□IT □I□□ □□□□ □□ILDI□□ □L□□R PLA□□
□ □	□ I□D□□ ID□□TI□ICATI□□, □□□ □ I□D□□ T□P□□ □□ □H□□T A□□
R□D□	R□□□ DRAI□ L□CATI□□ □ □I□I□H □L□□R
	□□T□□T □ □T□□□ □ RAP □ARRI□R □□D□R □LA□ A□D □□□ □□T□□ □ □
	□□T□R□ □□□IC□ AR□A

□□□PLA□

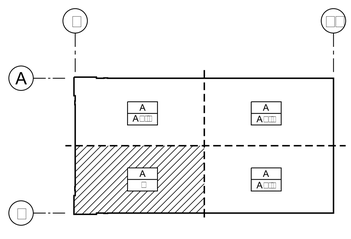

Dra□in□ Pl□t □ar

□e th□ □□□ar □□ □□□in□ dra□in□ ha□ n□t been reduced □r enlarged □□□ original □□□ □□□ar □□□□ □ exact□ □□ inch □n□ the original □□□ □drawin□ ha□ chan□ed.

DRA□ □ □□ DAT□
D□ □□□ □□□□□□

CCC □□ □ □□□
□□□□□

□H□□T □□□
A□□□

This Document, Either in Drawing or Electronic Format, is the Property of Hensel Phelps Construction Co. LP ("Contractor").
It is to be returned to Contractor upon request. It is not to be reproduced, copied or made available for any purpose other than that for which it is intended without the written consent of Contractor. This notice shall not be construed as a waiver of any rights in the event of publication of the work shown on this document. Any ideas, designs, arrangements or plans indicated by or represented in this document are the property of Contractor and are not to be used in any other work, except by written agreement with Contractor.

		DAT□
		R□□□□□□
		DAT□
		R□□□□□□

C□MM□RC□ C□□□TR□CTI□□ C□□LP□
□□□□ Cr□□r□ad□Par□□a□□rth
□□th □□□r
Cit□□Indu□tr□, Cali□mia
Tele□h□ne
Licen□e

PARTIAL □□LAR□□D □□ILDI□□ PLA□

□□ILDI□□ A

MA□□□TIC □AD□□R L□□I□TIC□ C□□T□R

CTH "H" □ILLA□□ □□PL□A□A□T PRAIRI□, □ I

□A□□Architectural□□□□□□□M□LC □d□□A□Architectural□□□□□□□A□□□□□d□□

A

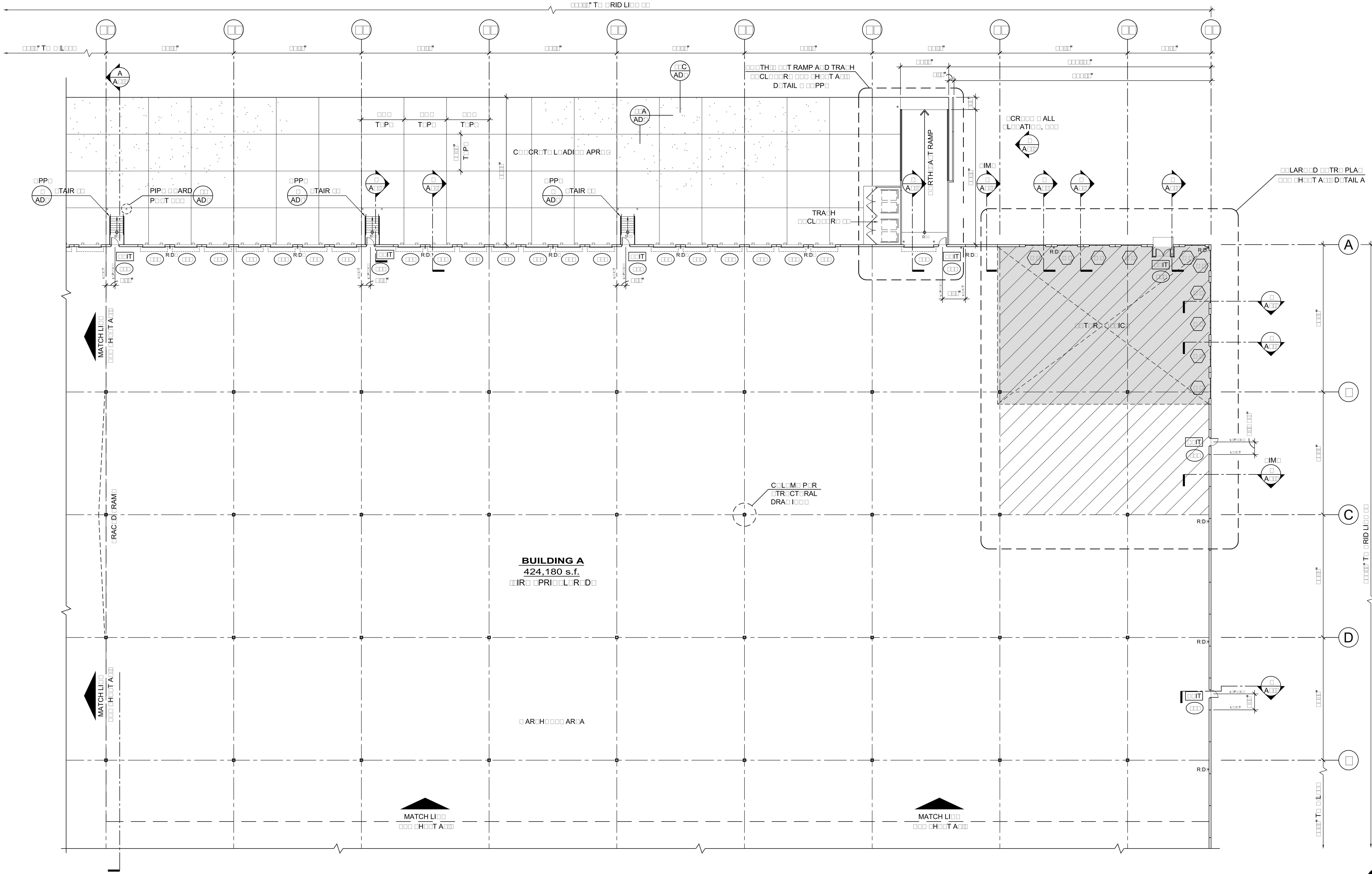

PARTIAL □□LAR□□D □□ILDI□□ □L□□R PLA□

□CAL□: □□□" = □'-□" | A

C□□□TR□CTI□□ □□T□□□

□□ PAI□T ALL I□T□RI□R □ALL□ □ITH □□□ □□C□AT □□ MILL □ HIT□ T□ C□□□R A□D PAI□T ALL C□L□M□□ □□LL□□ T□ □□□" HI□H□

□□ PAI□T□D ALL □□T□RI□R □ALL□ □□TH□ □□ILDI□□ □ITH □□□ □□C□AT □□ PRIM□R A□D □□□ □□C□AT □□ ACR□LIC □LAT PAI□T□

□□ PAI□T C□□CR□T□ □ILL□D □T□□L □□LLARD□ □A□□T□ □□LL□□□

□□ ALL □□ARD P□□T□ □□R □IR□ H□DRA□T□ A□D PI□□ □HALL □□ PR□□ID□D A□D I□□TALL□D □□ TH□ □IR□ □PRI□□L□R C□□TRACT□R□

□□ ALL C□□CR□T□ □AL□□ □HALL □□ □C□R□D A□ □H□□□ □□□□ALL□ □PAC□D□□ITH A R□TAR□ □I□I□H □□C□PT HA□DICAP RAMP□ □HICH □HALL HA□□ A M□DI□M □R□□M □I□I□H P□RP□□DIC□LAR T□ □L□P□□

□□ APPL□ □□□ □□C□AT □□ A□H□□RD □L□□R □□AL□R T□ ALL □AR□H□□□□ A□D □□T□R□ □□□IC□ □L□□R AR□A□

□□ ALL □□IT D□□R□ T□ □□ □□□IPP□D □ITH L□C□□□T □P□□A□L□ □R□M I□□ID□ □ITH□□T □□□ □□ □□□ □R A□□ □P□CIAL □□□□ L□D□□ □R □□□□RT□ □□T□RI□R □□□□D□

□□ PR□□ID□ □□MIL□□T□□□ □RAP □AP□R □ARRI□R □□D□R □LA□ AT L□CATI□□□ I□DICAT□ □□ PLA□□

□□ □□R □L□□R PA□I□□□□□□ R□I□□□RC□D C□□CR□T□ CRIT□RIA □ITH □" THIC□ R□I□□□RC□D C□□CR□T□ □LA□□ □□R M□R□ I□□□□, □□□ □TR□CT□RAL DRA□I□□□

□□□ C□□RDI□AT□ ALL □I□I□H□D DIM□□□I□□□ □ITH D□TAIL□ R□□□R□□C□D □□ PLA□□

□□□ □□□ D□□R □CH□D□L□ □□ □H□□T A□□

□□□ □□□ □I□D□□ T□P□□ □□ □H□□T A□□

□□□□RAL □□□□□T□□□

- D□□R ID□□TI□ICATI□□, □□□ D□□R □CH□D□L□ □□ □H□□T A□□
- □□IT □I□□ □□□□ □□ILDI□□ □L□□R PLA□□
- □I□D□□ ID□□TI□ICATI□□, □□□ □I□D□□ T□P□□ □□ □H□□T A□□
- R□D — R□□□ DRAI□ L□CATI□□ □ □I□I□H □L□□R
- □□T□□T □□ □T□□□ □RAP □ARRI□R □□D□R □LA□ A□D □□□ □□T□□ □□
- □□T□R□ □□□IC□ AR□A

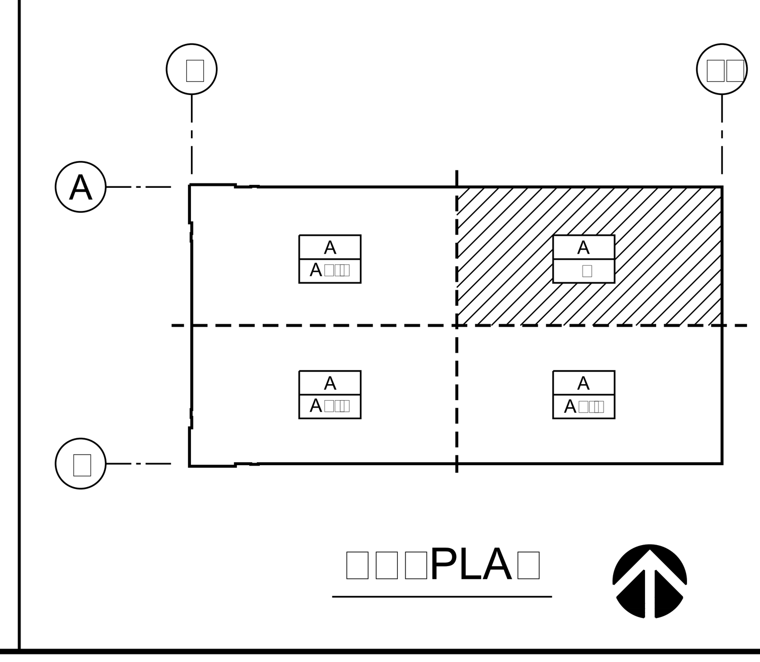

PARTIAL □□LAR□□D □□ILDI□□ PLA□
□□ILDI□□ A
MA□□□TIC □AD□□R L□□I□TIC□ C□□T□R
CTH "H" □ILLA□□ □□PLA□A□T PRAIRI□, □I

C□MM□RC□ C□□□TR□CTI□□ C□, L.P.
Licen□e □□□□□□□□□

DRA□□ □□: □□□ DAT□: □□□□□□□□
CCC □□□ □□□ □□□□□
□H□□T □□□ A□□□

This Document, Either as Drawing or the Assemblage of Electronic Data, is the Property of Commerce Construction Co., L.P. ("Commerce"). This document ... shall not be reproduced, distributed, or used in whole or in part, without the written consent of Commerce. This document ... without warranty of any kind either expressed or implied. ... and completeness. Commerce is not responsible for ... The acceptance or use of this document will be construed as an acceptance of the terms.

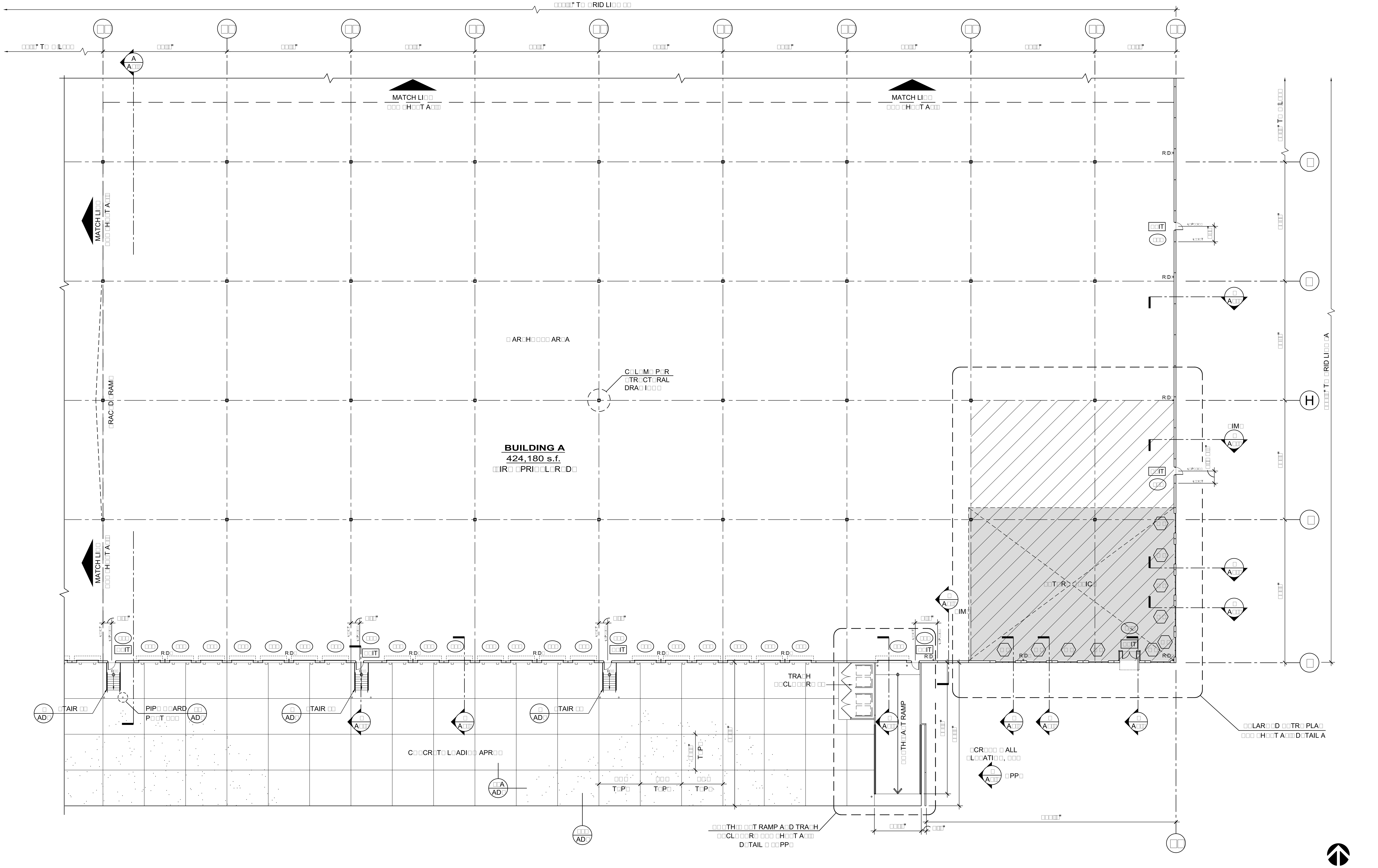

PARTIAL □□LAR□□D □□ILDI□□ □L□□R PLA□

□CAL□□ □□□□" □ □□□□"

A

C□□□TR□CTI□□ □□T□□□

□□ PAI□T ALL I□T□RI□R □ALL□ □ITH □□□ □□□C□AT □□ MILL □HIT□ T□ C□□□R A□D PAI□T ALL C□L□M□□ □□LL□□ T□ □□□□" HI□H□

□□ PAI□T□D ALL □□T□RI□R □ALL□ □□ TH□ □□ILDI□□ □ITH □□□ □□□C□AT □□ PRIM□R A□D □□□ □□□C□AT □□ ACR□LIC □LAT PAI□T□

□□ PAI□T C□□CR□T□ □ILL□D □T□□L □□LLARD□ □A□□T□ □□LL□□ □

□□ ALL □□ARD P□□T□ □□R □IR□ H□DRA□T□ A□D PI□□□ □HALL □□ PR□□ID□D A□D I□□TALL□D □□ TH□ □IR□ □PRI□□L□R C□□TRACT□R□

□□ ALL C□□CR□T□ □AL□□ □HALL □□ □C□R□D A□ □H□□ □ □□□□ALL□ □PAC□D□□ ITH A R□TAR□ □I□I□H □□C□PT HA□DICAP RAMP□ □HICH □HALL HA□□ A M□DI□M □R□□M □I□I□H P□RP□□DIC□LAR T□ □L□P□□

□□ APPL□ □□□ □□□C□AT □□ A□H□□RD □L□□R □□AL□R T□ ALL □AR□H□□□□ A□D □□T□R□ □□□IC□ □L□□R AR□A□

□□ ALL □□IT D□□R□ T□ □□ □□□IPP□D □ITH L□C□□□T □P□□A□L□ □R□M I□□ID□ □ITH□□T □□□ □□ □□□□ □R A□□ □P□CIAL □□□□ L□D□□ □R □□□□RT□ □□T□RI□R □□□□D□

□□ PR□□ID□ □□MIL□□T□□□ □RAP □AP□R □ARRI□R □□D□R □LA□ AT L□CATI□□□ I□DICAT□ □□ PLA□□

□□ □□R □L□□R PA□I□□□□□□ R□I□□□RC□D C□□CR□T□ CRIT□RIA □ITH □" THIC□ R□I□□□RC□D C□□CR□T□ □LA□□ □□R M□R□ I□□□□, □□□ □TR□CT□RAL DRA□I□□□

□□□ C□□RDI□AT□ ALL □I□I□H□D DIM□□□I□□□ □ITH D□TAIL□ R□□□R□□C□D □□ PLA□□

□□□ □□□ D□□R □CH□D□L□ □□ □H□□T A□□

□□□ □□□ □I□D□□ T□P□□ □□ □H□□T A□□

□□□□RAL □□□□□T□□□

(□□□)	D□□R ID□□TI□ICATI□□, □□□ D□□R □CH□D□L□ □□ □H□□T A□□
□□IT	□□IT □I□□ □□□□ □□ILDI□□ □L□□R PLA□□
(hexagon)	□I□D□□ ID□□TI□ICATI□□, □□□ □I□D□□ T□P□□ □□ □H□□T A□□
R□D□	R□□□DRAI□ L□CATI□□ □ □I□I□H □L□□R
(hatched)	□□T□□T □□ □T□□□ □RAP □ARRI□R □□D□R □LA□ A□D □□□ □□T□□ □□
(shaded)	□□T□R□ □□□IC□ AR□A

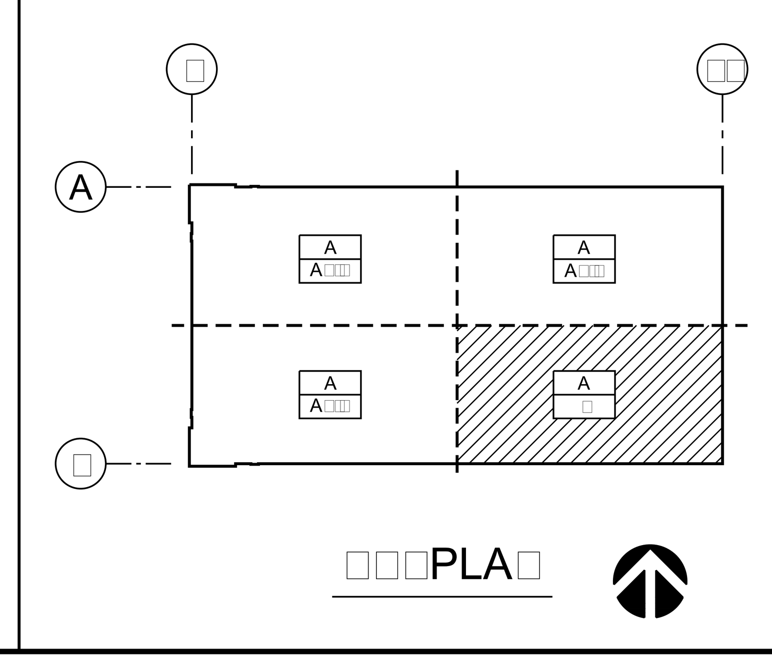

This Document, Either as Drawing or the Assemblage of Electronic Data, is the Property of Commerce Construction Co., L.P. ("Commerce"). ... without the written consent of Commerce. ... without warranty of any kind either expressed or implied. ... and completeness. Commerce is not responsible for ... document. The acceptance or use of this document will ...

R□□I□I□□□	DAT□

C□MM□RC□ C□□□TR□CTI□□ C□□,L.P□
□□□□□ Cr□□□r□ad□Par□a□□□rth
□i□th □l□□r
Cit□ □□Indu□tr□, Cali□□rnia □□□□□□□□□□
Tele□h□ne □□□□□□□□□□□□
Licen□e □□□□□□□□□□

PARTIAL □□LAR□□D □□ILDI□□ PLA□

□□ILDI□□ A

MA□□□TIC □AD□□R L□□I□TIC□ C□□T□R

CTH "H" □ILLA□□ □□ PL□A□A□T PRAIRI□, □I

Dra□in□ Pl□t □ar

DRA□□ □□ DAT□

CCC □□□ □□□

□H□□T □□□

A□□□

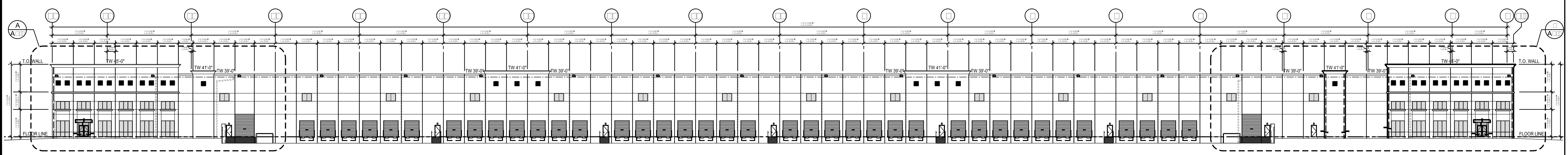

□□RTH □L□□ATI□□

□CAL□□ □" □ □□□□" A

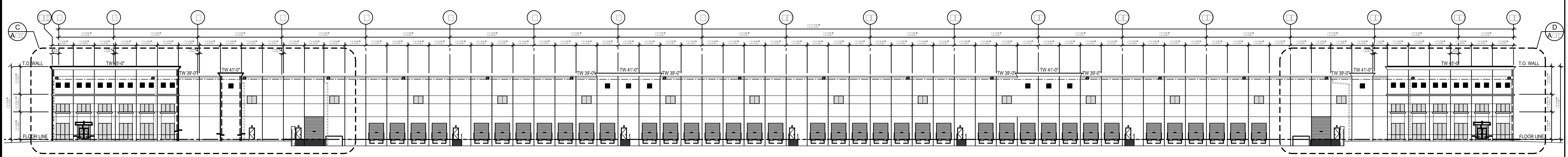

□□□TH □L□□ATI□□

□CAL□□ □" □ □□□□" □

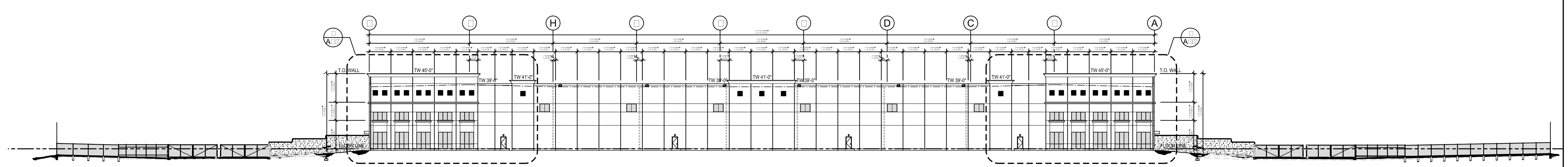

□A□T □L□□ATI□□

□CAL□□ □" □ □□□□" C

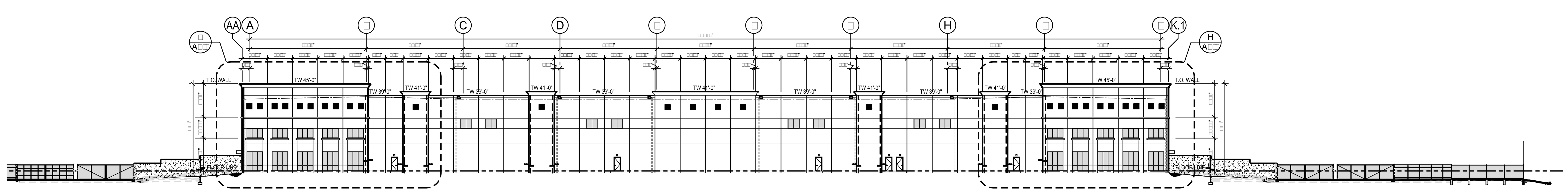

□ □□T □L□□ATI□□

□CAL□□ □" □ □□□□" D

MAT□RIAL L□□□□D

- I□□□LAT□D PR□CA□T C□□CR□T□ PA□□L
- AL□MI□□M □RAMI□□ □□□T□M □CL□AR A□□DI□□D
- "□□LAR C□□L □RA□" □" TH□ I□□□LATI□□ □LA□□ □R□□L□CTI□□ □□R□AC□ □□ TH□ I□□ID□□ T□ D□□□T□□ T□MP□R□D □LA□□
- PAIR □□□" □□□□" □ARR□□ □TIL□ AL□M□□T□R□□R□□T D□□R
- □□□" "□" □R□□□□ □H□RI□□□R □□RT□□□□□ D□TAIL
- PA□□L □□I□T □□□ D□TAIL
- □□□" □ □□□□□" H PR□□I□I□H□D □□CTI□□AL □□□RH□AD □□RTICAL □□CTI□□AL LI□T D□□R□□□□ D□TAIL
- □□□□" □ □□□□□" H PR□□I□I□H□D □□CTI□□AL □□□RH□AD □□RTICAL □□CTI□□AL LI□T D□□R□□□□ D□TAIL
- □□□" □□□□" H□LL□□ M□TAL D□□R □PAI□T T□ MATCH AD□AC□□T □□ILDI□□ C□L□R
- □□□" □□□□" □□□□" R□C□□□□□D PA□□L □L□C□□□T, □□□ D□TAIL
- □□□" H C□R□IC□ □ITH □CRATCH C□AT □M□□TH □I□I□H, □□□ D□TAIL
- □□" H C□R□IC□ □ITH □CRATCH C□AT □M□□TH □I□I□H, □□□ D□TAIL
- 6" Ø 8" Ø ROOF DRAIN AND 12" H x 18" W OVERFLOW, □□□ D□TAIL
- □□T □□□D
- □□T □□□D
- R□□□LI□□ □□ T□P □□ □H□ATHI□□□
- R□□□DRAI□ L□AD□R □□□□□D □ I□T□RI□R □ID□ □□ □□ILDI□□
- CA□□P□ □ □M□TAL C□MP□□IT□ PA□□L□ "AL□MALL □□□□ □□RI□□" CHAMPA□□□ M□TALLIC□□□□ D□TAIL
- □AL□A□I□□D □RAT□ □TAIR TR□AD□ A□D LA□DI□□ □□" H□□□ARDRAIL □□□T□M □□□" Ø STD. PAINTED □TL□PIP□ HA□DRAIL □□□□ D□T□□AD□□
- □□" □□□" □□ □□□" LAMI□AT□D R□□□□R D□C□ □□MP□R
- □□□" □ □□□□" H □L□C□□□T □□R □□T□R□ D□C□ L□□□L□R, T□P□T□TAL □ □□
- P□□R□D I□ PLAC□ C□□CR□T□ □ALL
- C□□CR□T□ RAMP
- C□□CR□T□ □T□□P, □□□ D□TAIL
- □□□" H □DIM□□ARI□□ □IDTH □ I□D□□ □ □□" AL□M□□RAM□ □ □" TH□□I□□□LAT□D □LA□I□□ □ □□R□□ TI□T, □□□ □T□TAL □ □□
  □□R M□R□ I□□□□, □□□ □□LAR□□D □□T□RI□R □L□□ATI□□□ □H□□T A□□ □ A□□
- □□□" □ □□□□" H □ I□D□□ □ □□" AL□M□□RAM□ □ □" TH□□ I□□□LAT□D □LA□I□□ □ □□R□□ TI□T □ □□□□" A□□□, □□□ □T□TAL □ □□
- TRA□H □□CL□□□R□, □□□ D□TAIL
- □ALL M□□□T□D □□T□RI□R LI□HT □I□T□R□ □ □□□" A□□□□ □□□ □L□CTRICAL D□ □□□
- PAIR CHAI□ LI□□ □LIDI□□ □AT□ □PAI□T□D□ P□R D□TAIL
- □□□" HI□H CHAI□LI□□ □□□C□ P□R D□TAIL
- □□" C□L□R □A□

□□T□□
□□R M□R□ I□□□RMATI□□ R□□ARDI□□ □ I□D□□ T□P□□ , □□□ □H□□T A□□

This Document, Either as Drawing or the Assemblage of Electronic Data, is the Property of Commerce Construction Co., L.P. ("Commerce"). This document shall not be taken as a substitute for the original sealed document. Commerce is not responsible for edited or reproduced data.

DAT□ | R□□I□I□□ | DAT□ | R□□I□I□□

C□MM□RC□ C□□□TR□CTI□□ C□., L.P.
□□□□□ Cr□□□r□ad □ Par□□a□ □□rth
□i□th □l□□r
Cit□ □□ I□du□tr□, Cali□□rnia
Tele□h□ne □□□□□□□□□□
Licen□e □□□□□□□□

□□T□RI□R □L□□ATI□□□
□□ILDI□□ A
MA□□□TIC □AD□□R L□□I□TIC□ C□□T□R
CTH "H" □ILLA□□ □□ PL□A□A□T PRAIRI□, □I

Dra□in□ Pl□t □ar
□" □"
□□e thi□ □l□t □ar t□ c□n□ir□ dra□in□ ha□ n□t □een reduced □r enlar□ed □r□□ □ri□inal. I□ thi□ □l□t □ar i□ n□t e□actl□ □ inch l□n□ the □h□□ical □i□e □□ dra□in□ ha□ chan□ed.

DRA□ □ □□ D□ □□□ | DAT□ □□□□□□□□

CCC □□□ □□□□ □□□□□

□H□□T □□□
A□□□

□□A□□Architectural□□□□□□M□LC □ld□□A□Architectural□□□□□□□A□□□□d□□

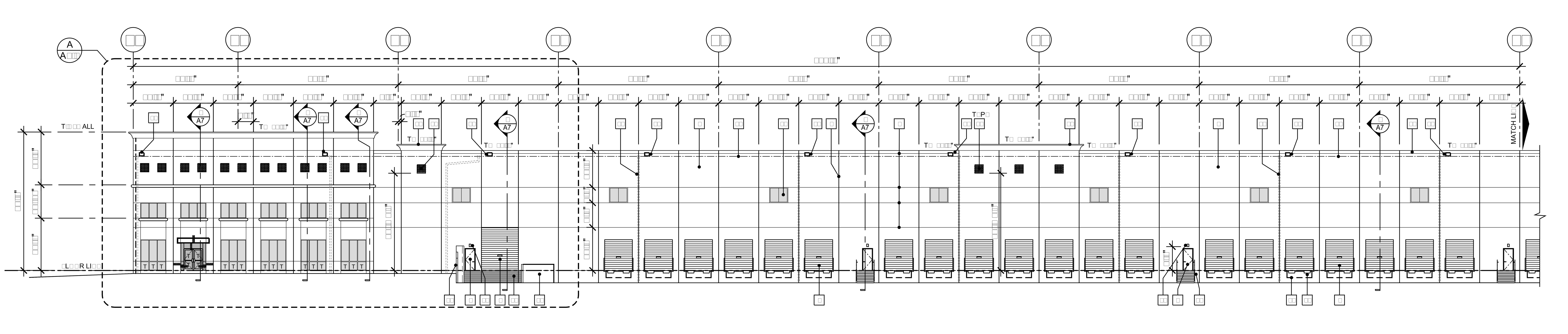

PARTIAL □□RTH □L□□ATI□□

□CAL□□ □□□" □ □□□" A

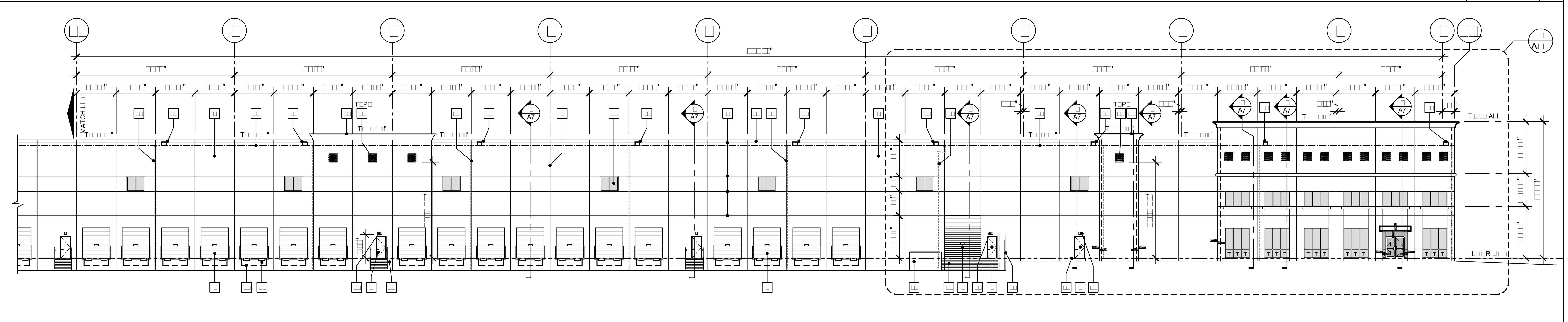

PARTIAL □□RTH □L□□ATI□□

□CAL□□ □□□" □ □□□" A

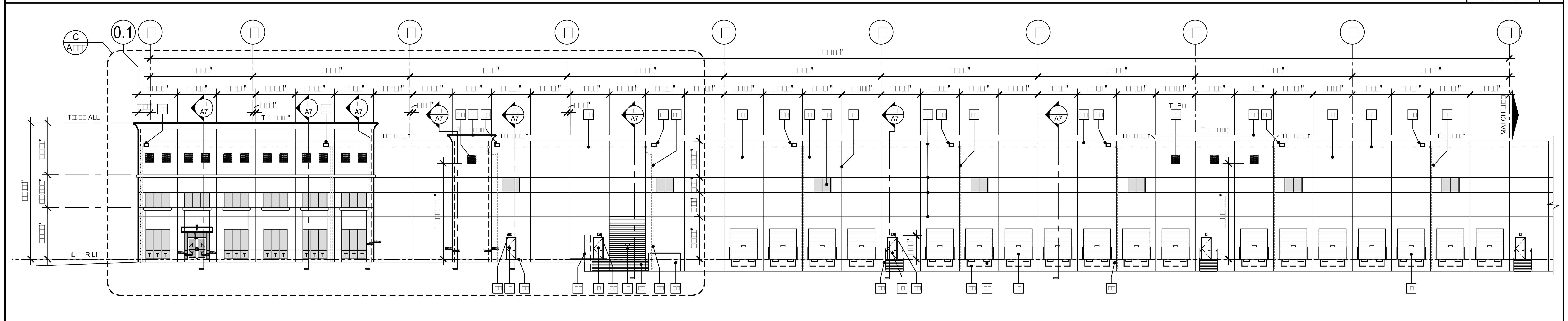

PARTIAL □□□TH □L□□ATI□□

□CAL□□ □□□" □ □□□" □

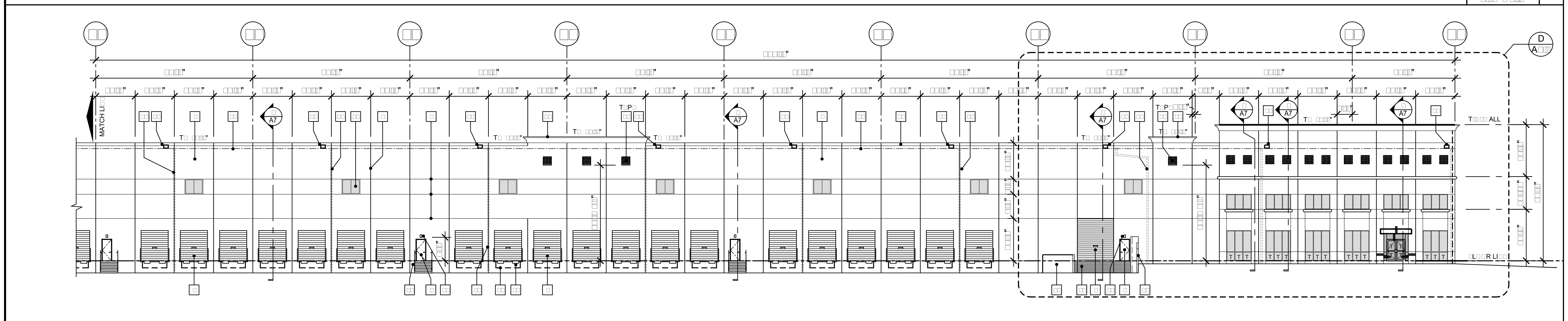

PARTIAL □□□TH □L□□ATI□□

□CAL□□ □□□" □ □□□" □

MAT□RIAL L□□□□D

- □ I□□□LAT□D PR□CA□T C□□CR□T□ PA□□L
- □ AL□MI□□M □RAMI□□ □□□T□M □CL□AR A□□DI□□D
- □ "□□LAR C□□L □RA□" □" TH□ I□□□LATI□□ □LA□□ □R□□L□CTI□□ □□R□AC□ □□ TH□ I□□ID□□ T□ □D□□□T□□ T□MP□R□D □LA□□
- □ PAIR □□□" □ □□□" □ARR□□ □TIL□ AL□M□□T□R□□R□□T D□□R
- □ □□□" "□" □R□□□□□ □H□RI□□□R □□RT□□□□□ D□TAIL (□/AD□)
- □ PA□□L □□I□T □□□ D□TAIL□ (□/AD□) (□/AD□)
- □ □□□" □ □□□□" H PR□□I□I□H□D □□CTI□□AL □□□RH□AD □□RTICAL □□CTI□□AL LI□T D□□R□□□□ D□TAIL (□□/AD□) (□□/AD□)
- □ □□□□" □ □□□□" H PR□□I□I□H□D □□CTI□□AL □□□RH□AD □□RTICAL □□CTI□□AL LI□T D□□R□□□□ D□TAIL (□□/AD□) (□□/AD□)
- □ □□□" □□□□" H□LL□□ M□TAL D□□R □PAI□T T□ MATCH AD□AC□□T □□ILDI□□ C□L□R
- □□ □□□" □□□□" □□□" R□C□□□□D PA□□L □L□C□□□T, □□□ D□TAIL (□□/AD□)
- □□ □□□" H C□R□IC□ □ITH □CRATCH C□AT □M□□TH □I□I□H, □□□ D□TAIL (□/AD□) (□□C/AD□)
- □□ □□" H C□R□IC□ □ITH □CRATCH C□AT □M□□TH □I□I□H, □□□ D□TAIL (□□A/AD□) (□□□/AD□)
- □□ 6" Ø 8" Ø ROOF DRAIN AND 12" H x 18" W OVERFLOW, □□□ D□TAIL (□/AD□) (□/AD□)
- □□ □□T □□□D
- □□ □□T □□□D
- □□ R□□□LI□□ □□ T□P □□ □H□ATHI□□□
- □□ R□□□DRAI□ L□AD□R □□□□□D □ I□T□RI□R □ID□ □□ □□ILDI□□
- □□ CA□□P□ □ □M□TAL C□MP□□IT□ PA□□L□ "AL□MALL □□□□ □□RI□□" CHAMPA□□□ M□TALLIC□□□□ D□TAIL (□/AD□)
- □□ □AL□A□I□□D □RAT□ □TAIR TR□AD□ A□D LA□DI□□ □□" H□□□ARDRAIL □□□T□M □□□" Ø STD. PAINTED □TL□PIP□ HA□DRAIL □□□□ D□T□□AD□□
- □□ □□" □□□" □□ □□□" LAMI□AT□D R□□□□R D□C□ □□MP□R
- □□ □□□" □ □□□" H □L□C□□□T □□R □□T□R□ D□C□ L□□□L□R, T□P□T□TAL □ □□
- □□ P□□R□D I□ PLAC□ C□□CR□T□ □ ALL
- □□ C□□CR□T□ RAMP
- □□ C□□CR□T□ □T□□P, □□□ D□TAIL (□/AD□)
- □□ □□□" H □DIM□□ARI□□ □IDTH □ I□D□□ □ □□" AL□M□□RAM□ □ □" TH□□I□□□LAT□D □LA□I□□ □ □□R□□ TI□T, □□□ (□/AD□) (□/AD□) □T□TAL □ □□

  □□R M□R□ I□□□□, □□□ □□LAR□□D □□T□RI□R □L□□ATI□□□ □H□□T A□□ □ A□□
- □□ □□□" □ □□□" H □ I□D□□ □ □□" AL□M□□RAM□ □ □" TH□□ I□□□LAT□D □LA□I□□ □ □□R□□ TI□T □ □□□□" A□□□□, □□□ (□/AD□) (□/AD□) □T□TAL □ □□
- □□ TRA□H □□CL□□□R□, □□□ D□TAIL (□/AD□)
- □□ □ ALL M□□□T□D □□T□RI□R LI□HT □I□T□R□ □ □□□" A□□□□ □□□ □L□CTRICAL D□ □□□
- □□ PAIR CHAI□ LI□□ □LIDI□□ □AT□ □PAI□T□D□ P□R D□TAIL (□/AD□) (□□/AD□)
- □□ □□□" HI□H CHAI□LI□□ □□□C□ P□R D□TAIL (□/AD□)
- □□ □□" C□L□R □A□

□□T□□

□□R M□R□ I□□□RMATI□□ R□□ARDI□□ □ I□D□□ T□P□□ (□□) , □□□ □H□□T A□□

This Document, Either as Drawing or the Assemblage of Electronic Data, is the Property of Commerce Construction Co., L.P. ("Commerce"). This document, including all electronic data attached therein, shall not be reproduced, distributed, modified, used or implemented in any way in whole or in part, without the written consent of Commerce. This document shall not be taken as a pertinent to, associated with, or as a replacement for the official sealed document, and is without warranty of any kind either expressed or implied. Any person or organization relying on this document for accuracy and completeness. Commerce is not responsible for edited or reproduced versions of digital data from this document. The acceptance or use of this document will be construed as an acceptance of the premises.

DAT□	□□	R□□I□I□□

DAT□	□□	R□□I□I□□

C□MM□RC□ C□□□TR□CTI□□ C□., L.P.
□□□□□ Cr□□□rad□ Par□□a□□rth
□i□th □l□□r
Cit□ □□Indu□tr□, Cali□□rnia □□□□□□□□□□
Tele□h□ne □□□□□□□□□□□□□
Licen□e □□□□□□□□□

PARTIAL □□RTH □ □□□TH □□T□RI□R □L□□□□

□□ILDI□□ A

MA□□□TIC □AD□□R L□□I□TIC□ C□□T□R

CTH "H" □ILLA□□ □□ PL□A□A□T PRAIRI□, □I

Dra□in□ Pl□t □ar

□" □"

□□e thi□ □l□t □ar t□ c□n□ir□ dra□in□ ha□ n□t □een reduced □r enlar□ed □r□□ □ri□inal. I□ thi□ □l□t □ar i□ n□t e□actl□ □ inch l□n□ the □h□□ical □i□e □□ dra□in□ ha□ chan□ed□

DRA□□ □□ D□ □□□ | DAT□ □□□□□□□□

CCC □□□ □□□ □□□□□

□H□□T □□□

A□□□

□□A□□□Architectural□□□□□□□□M□LC □ld□□A□Architectural□□□□□□□□A□□□□□d□□

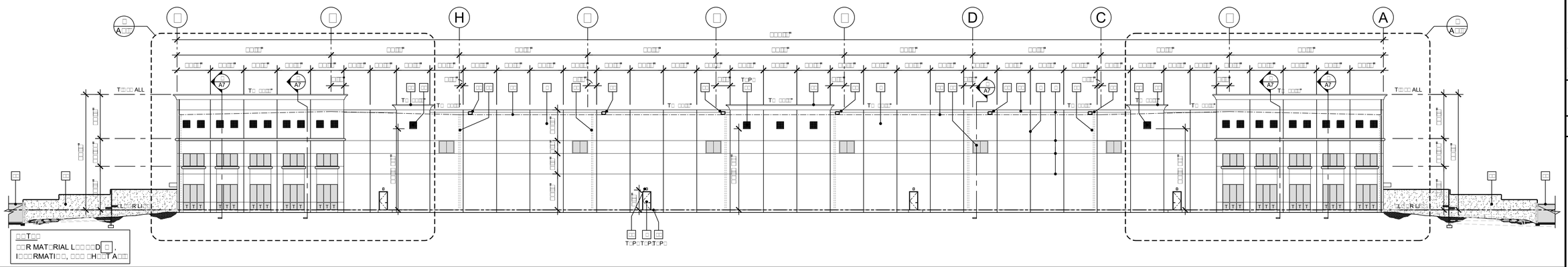

□□T□□
□□R MAT□RIAL L□□□□D □ ,
I□□□RMATI□□, □□□ □H□□T A□□□

□A□T □L□□ATI□□

□CAL□□
□□□" □ □□□"
C

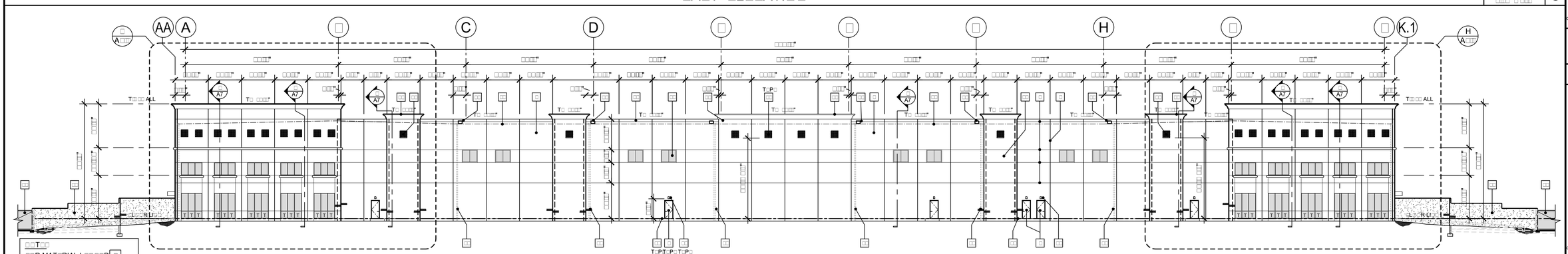

□□T□□
□□R MAT□RIAL L□□□□D □ ,
I□□□RMATI□□, □□□ □H□□T A□□□

□ □□T □L□□ATI□□

□CAL□□
□□□" □ □□□"
D

□□□□□T□□□

A AL□MI□□M □RAMI□□ □□□T□M □CL□AR A□□DI□□D

□ "□□LAR C□□L □RA□" □" TH□ I□□□LATI□□ □LA□□ □R□□L□CTI□□ □□R□AC□ □□ TH□ I□□ID□□ T □ D□□□T□□ T□MP□R□D □LA□□

C R□C□□□□D D□□ □LI□HT □□T□R□ P□R □L□CT□□ □□□

D □□□" PLA□T□R □□□H

□ I□□□LAT□D PR□CA□T C□□□CR□T□ PA□□L

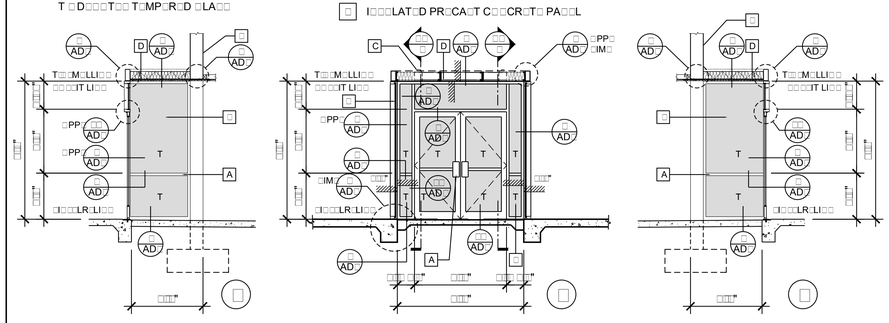

□LA□I□□ □□CTI□□ □□L□□ATI□□

□CAL□□
□□□" □ □□□"
□

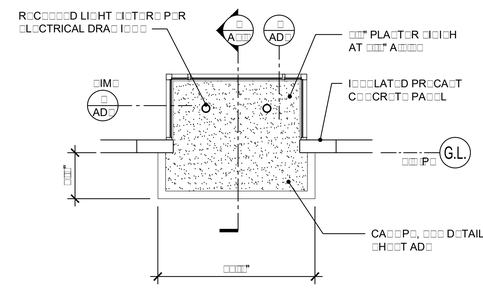

□□TR□ □□□□IT PLA□

□CAL□□
□□□" □ □□□"
□

The Document, Either in Paper or Drawing or the Assemblage of Drawings, Is Property of Construction Co. L.P. (Construction Co.). Any Use, Reproduction or Transmission in Whole or in Part, Without the Written Consent of Construction Co. This Document Is Not Intended for Use in Any Other Project, Even if Similar in Nature, and Any Such Use Is Prohibited. Any Alterations Made to the Drawing or Document Without the Written Consent of Construction Co. This Document Is Not Intended for Use in Any Other Project, Even if Similar in Nature, and Any Such Use Is Prohibited. The Drawing or Document Is Deemed Accepted Unless Objected to in Writing within 30 Days of Receipt.

DAT□	
R□□□□□□	
DAT□	
R□□□□□□	

C□MM□RC□ C□□□TR□CTI□□ C□□LP□
□□□□□ Cr□□□ad □Par□□a□□□th
□□th □□□□
Cit□□ Indu□tr□ Cali□□mia □□□□□□□□□□
Tele□h□ne □□□□□□□□□□□□
Licen□e □□□□□□□□□□

□A□T □ □ □□T □□T□RI□R □L□□ATI□□□

□□ILDI□□ A

MA□□□TIC □AD□□R L□□□□TIC□ C□□T□R

CTH "H" □ILLA□□ □□PL□A□A□T PRAIRI□, □ I

□A□□ Architectural□□□□□□M□LC □d□□A Architectural□□□□□□A□□□□d□□

Dra□in□ Pl□t □ar

□□e th□□□□ar □□□ c□n□n□ dra□□□ha□ n□t □een reduced □r enlarged □□□□ □□inal□□ th□□□□ar □□□ n□t e□ual□□□ inch □n□ the □h□□□al □□e □□dra□in□ ha□ □hanged□□

DRA□ □ □□ DAT□
D□ □□□ □□□□□□

CCC □□□ □□□
□□□□□

□H□□T □□□

A□□□

C□L□R □CH□D□L□

A — C□L□R LI□□ □RA□□□□
CL □□□□□
D□C□ D□□ □

□ — C□L□R LI□□ □RA□□□□
CL □□□□M
□T□RM □A□

C — C□L□R LI□□ □RA□□□□
CL □□□□□
□ H□□L □□ARR□□

D — □□LAR C□□L □RA□ □LA□I□□

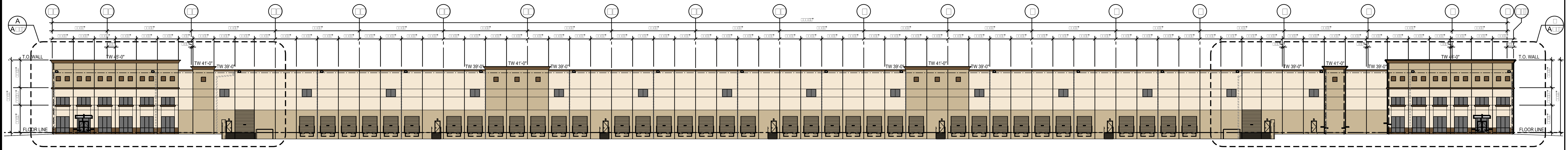

□□RTH □L□□ATI□□ — □CAL□□ □" □ □□□□" — A

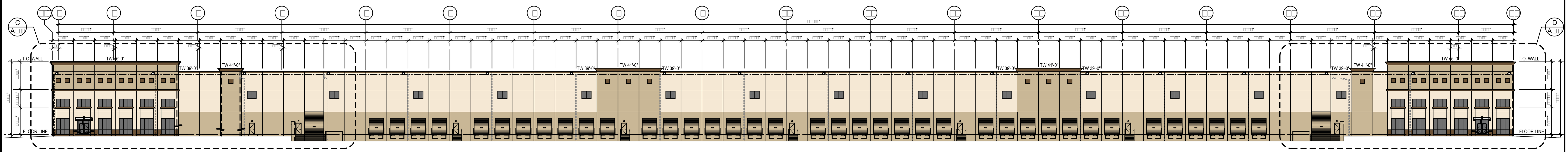

□□□TH □L□□ATI□□ — □CAL□□ □" □ □□□□" — □

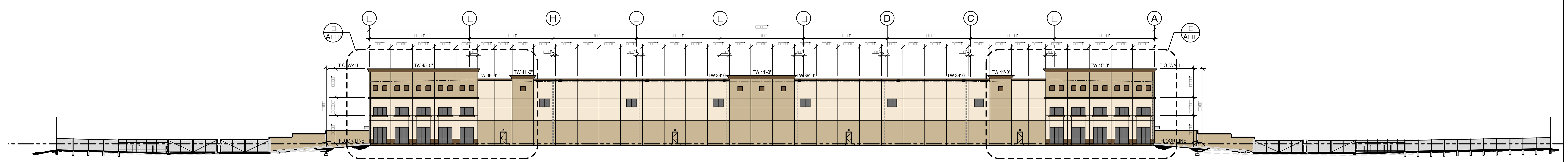

□A□T □L□□ATI□□ — □CAL□□ □" □ □□□□" — C

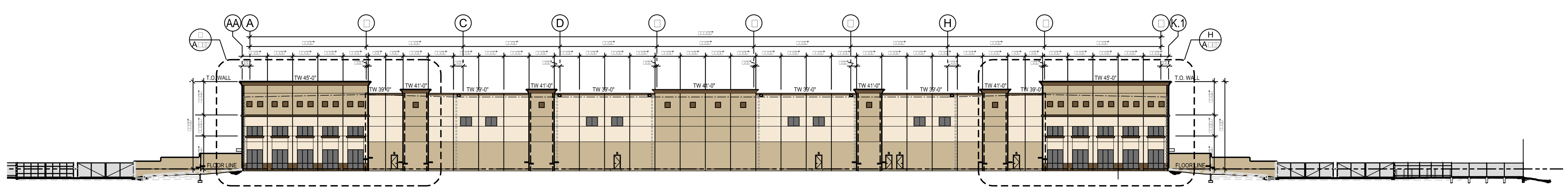

□ □□T □L□□ATI□□ — □CAL□□ □" □ □□□□" — D

This Document, Either as Drawing or the Assemblage of Electronic Data, is the Property of Commerce Construction Co., L.P. ("Commerce"). This document, including all electronic data attached therein, □a□ n□t □e re□r□duced, di□tri□uted, □□dified, u□ed □r i□□le□ented in an□ □a□ in □h□le □r in □art, without the written consent of Commerce. This document □hall n□t □e ta□en a□ □urtenant t□, a□□ciated □ith, □r a□ a re□lace□ent □r the □□icial □ealed d□cu□ent, and i□ without warranty of any kind either expressed or implied. An□ □er□□n □r □r□ani□ati□n □a□in□ u□e □□□□ rel□in□ □n thi□ d□cu□ent i□ re□□□n□i□le □□r c□n□ir□in□ it□ accurac□ and completeness. Commerce is not responsible for edited □r re□r□duced □er□i□n□ □□ di□ital data □r□□ thi□ document. The acceptance or use of this document will □e c□n□trued a□ an acce□tance □□ the □□re□□in□.

DAT□ | □□ | R□□I□I□□□
DAT□ | □□ | R□□I□I□□□

C□MM□RC□ C□□□TR□CTI□□ C□,L.P□
□□□□□ Cr□□r□ad□ Par□a□□□rth
□i□th □l□□r
Cit□ □□Indu□tr□, Cali□□rnia □□□□□□□□□□□
Tele□h□ne □□□□□□□□□□□□□□
Licen□e □□□□□□□□□

□□T□RI□R PAI□T □L□□ATI□□□
□□ILDI□□ A
MA□□□TIC □AD□□□R L□□I□TIC□ C□□T□R
CTH "H" □ILLA□□ □□ PL□A□A□T PRAIRI□, □I

Dra□in□ Pl□t □ar
□" □"
□□e thi□ □l□t □ar t□ c□n□ir□ dra□in□ ha□ n□t □een reduced □r enlar□ed □r□□ □ri□inal□ I□ thi□ □l□t □ar i□ n□t e□actl□ □ inch l□n□ the □h□□ical □i□e □□dra□in□ ha□ chan□ed□

DRA□ □ □□ DAT□
D□ □□□ □□□□□□□

CCC □□□ □□□
□□□□□

□H□□T □□□
A□□□

□□A□□Architectural□□□□□□M□LC □ld□A Architectural□□□□□□□A□□□□d□□

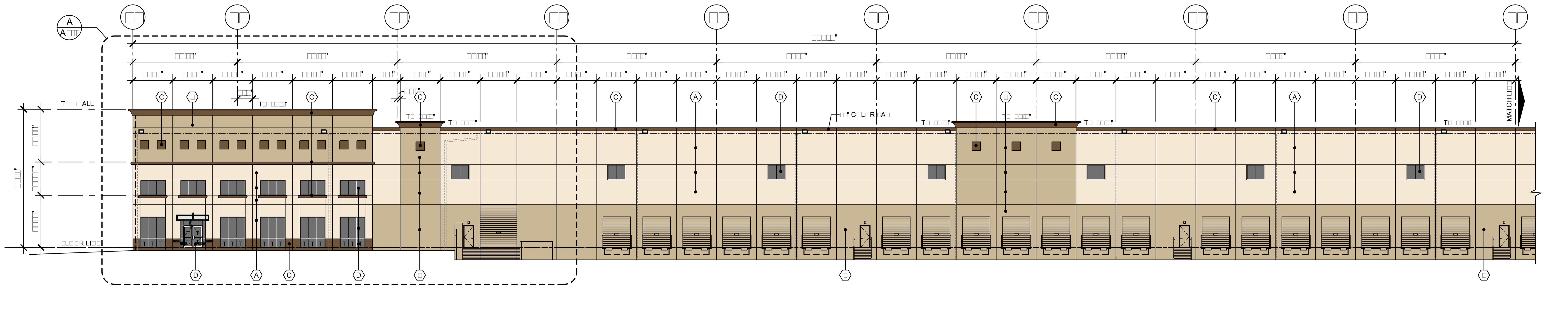

PARTIAL □□RTH □L□□ATI□□

□CAL□□ □□□" □ □□□" | A

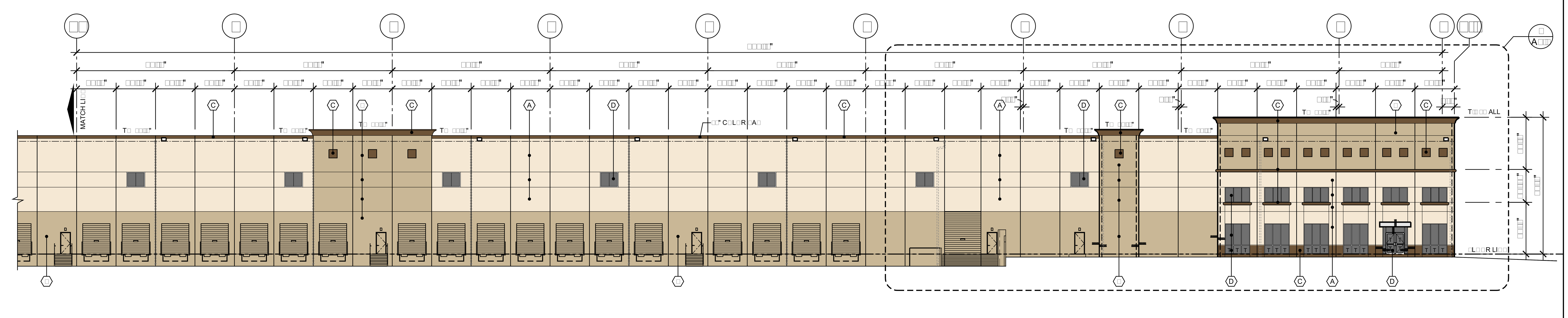

PARTIAL □□RTH □L□□ATI□□

□CAL□□ □□□" □ □□□" | A

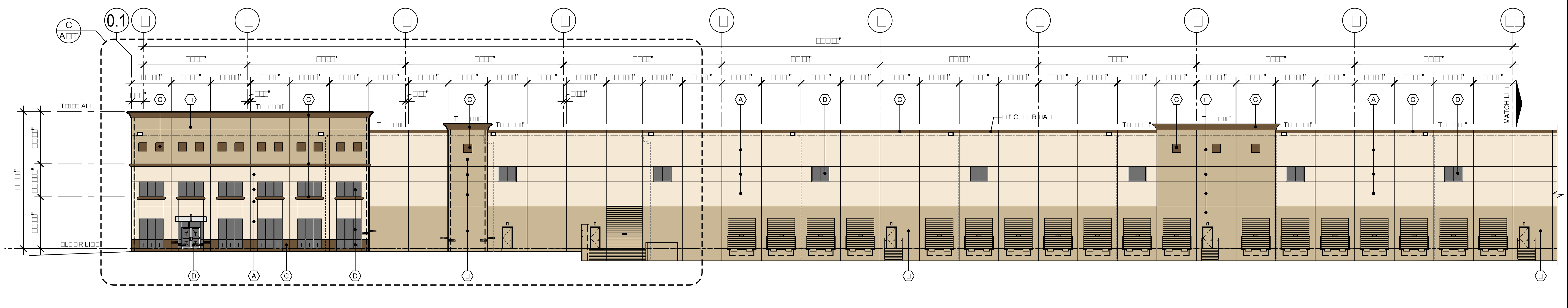

PARTIAL □□□TH □L□□ATI□□

□CAL□□ □□□" □ □□□" | □

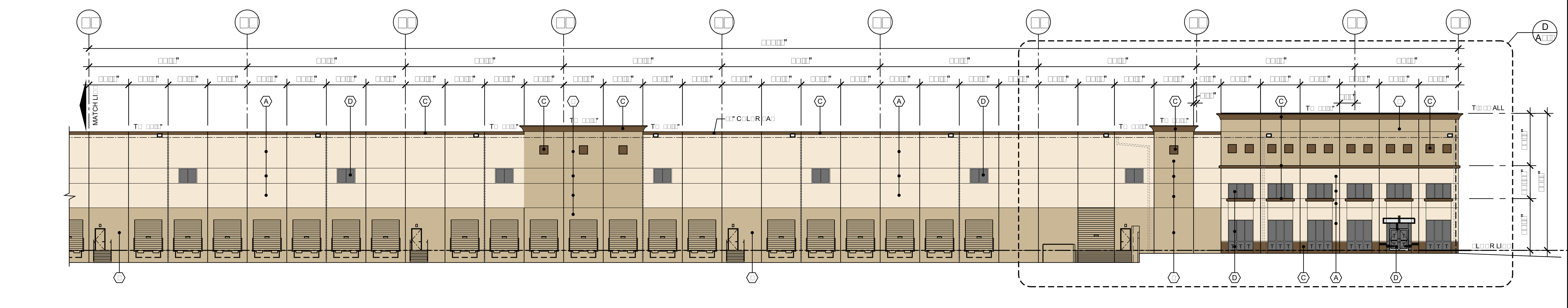

PARTIAL □□□TH □L□□ATI□□

□CAL□□ □□□" □ □□□" | □

C□L□R □CH□D□L□

- (A) C□L□R LI□□ □RA□□□□ CL □□□□□ D□C□ D□□ □
- (□) C□L□R LI□□ □RA□□□□ CL □□□□M □T□RM □A□
- (C) C□L□R LI□□ □RA□□□□ CL □□□□□ □H□□L □□ARR□□
- (D) □□LAR C□□L □RA□ □LA□I□□

This Document, Either as Drawing or the Assemblage of Electronic Data, is the Property of Commerce Construction Co., L.P. ("Commerce"). This document, including all electronic data attached therein, may not be reproduced, distributed, modified, used or implemented in any way in whole or in part, without the written consent of Commerce. This document shall not be taken as a substitute for the original sealed document, and is without warranty of any kind either expressed or implied. Any alteration or manipulation of this document is responsible for accuracy and completeness. Commerce is not responsible for edited or reproduced versions of the digital data. The acceptance or use of this document will be construed as an acceptance of the preceding.

DAT□ | R□□I□I□□□

DAT□ | R□□I□I□□□

C□MM□RC□ C□□□TR□CTI□□ C□, L.P.
□□□□□ Cr□□r□ad □Par□a□□rth
□i□th □l□□r
Cit□ □□Indu□tr□, California □□□□□□□□□□□□
Tele□h□ne □□□□□□□□□□□□□
Licen□e □□□□□□□□□□

□□RTH □ □□□TH PAI□T □□T□RI□R □L□□ATI□□□

□□ILDI□□ A

MA□□□TIC □AD□□R L□□I□TIC□ C□□T□R

CTH "H" □ILLA□□ □□ PL□A□A□T PRAIRI□, □I

Dra□in□ Pl□t □ar
□" □"
□□e thi□ □l□t □ar t□ c□n□ir□ dra□in□ ha□ n□t □een reduced □r enlar□ed □r□□ □ri□inal. I□ thi□ □l□t □ar i□ n□t e□actl□ □ inch l□n□ the □h□□ical □i□e □□ dra□in□ ha□ chan□ed□

DRA□ □ □□ DAT□
D□ □□□ □□□□□□□

CCC □□□ □□□
□□□□□

□H□□T □□□
A□□□

□□A□□□Architectural□□□□□□□□M□LC □ld□□A Architectural □□□□□□□□A□□□□□d□□□

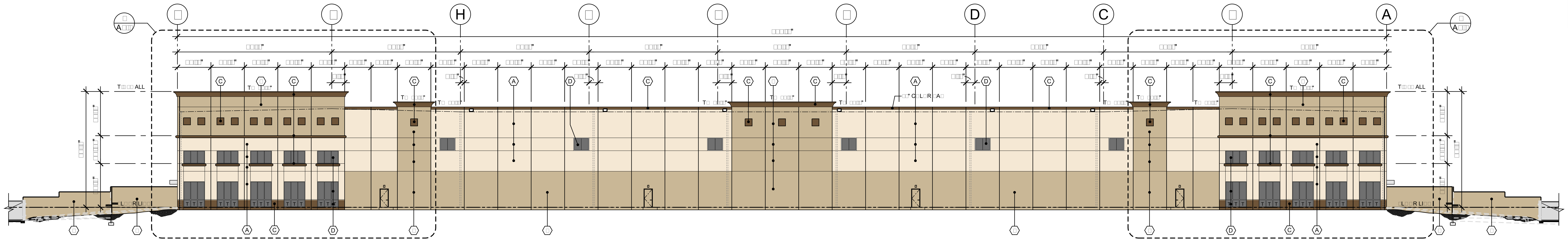

□A□T □L□□ATI□□

□CAL□□

C

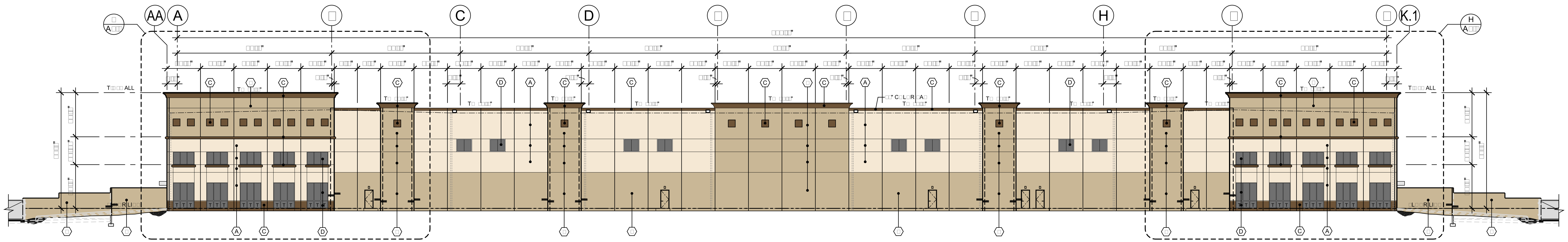

□ □□T □L□□ATI□□

□CAL□□

D

C□L□R □CH□D□L□

(A)	C□L□R LI□□ □RA□□□□ CL □□□□□ D□C□ D□□ □
(□)	C□L□R LI□□ □RA□□□□ CL □□□□M □T□RM □A□
(C)	C□L□R LI□□ □RA□□□□ CL □□□□□ □ H□□L □□ARR□□
(D)	□□LAR C□□L □RA□ □LA□I□□

□CAL□□

□CAL□□

This Document, Either as Drawing or the Assemblage of Electronic Data, is the Property of Commerce Construction Co., L.P. ("Commerce"). This document, including all electronic data attached therein, may not be reproduced, distributed, modified, or used in whole or in part, without the written consent of Commerce. This document shall not be taken as a complete or official sealed document, and is without warranty of any kind either expressed or implied. Commerce is not responsible for the accuracy and completeness of this document if reproduced or edited. The acceptance or use of this document will be construed as an acceptance of the terms herein.

DAT□ | R□□I□I□□□

DAT□ | R□□I□I□□□

C□MM□RC□ C□□□TR□CTI□□ C□, L.P.
Cr□□r□ad□ Par□a□ □orth
□i□th □l□□r
Cit□ □□ Indu□tr□, California
Tele□h□ne □□□□□□□□□□
Licen□e □□□□□□□□

□A□T □ □ □□T PAI□T □□T□RI□R □L□□ATI□□□

□□ILDI□□ A

MA□□□TIC □AD□□R L□□I□TIC□ C□□T□R

CTH "H" □ILLA□□ □□ PL□A□A□T PRAIRI□, □I

Dra□in□ Pl□t □ar
□" — □"
□□e thi□ □l□t □ar t□ c□n□ir□ dra□in□ ha□ n□t □een reduced □r enlar□ed □r□□ □ri□inal. I□ thi□ □l□t □ar i□ n□t e□actl□ □ inch l□n□ the □h□□ical □i□e □□ dra□in□ ha□ chan□ed.

DRA□ □ □□ DAT□
D□ □□□ □□□□□□□

CCC □□□ □□□
□□□□□

□H□□T □□□
A□□□

□□A□□ Architectural □□□□□□□M□LC □ld□□A Architectural □□□□□□□A□□□□d□□□

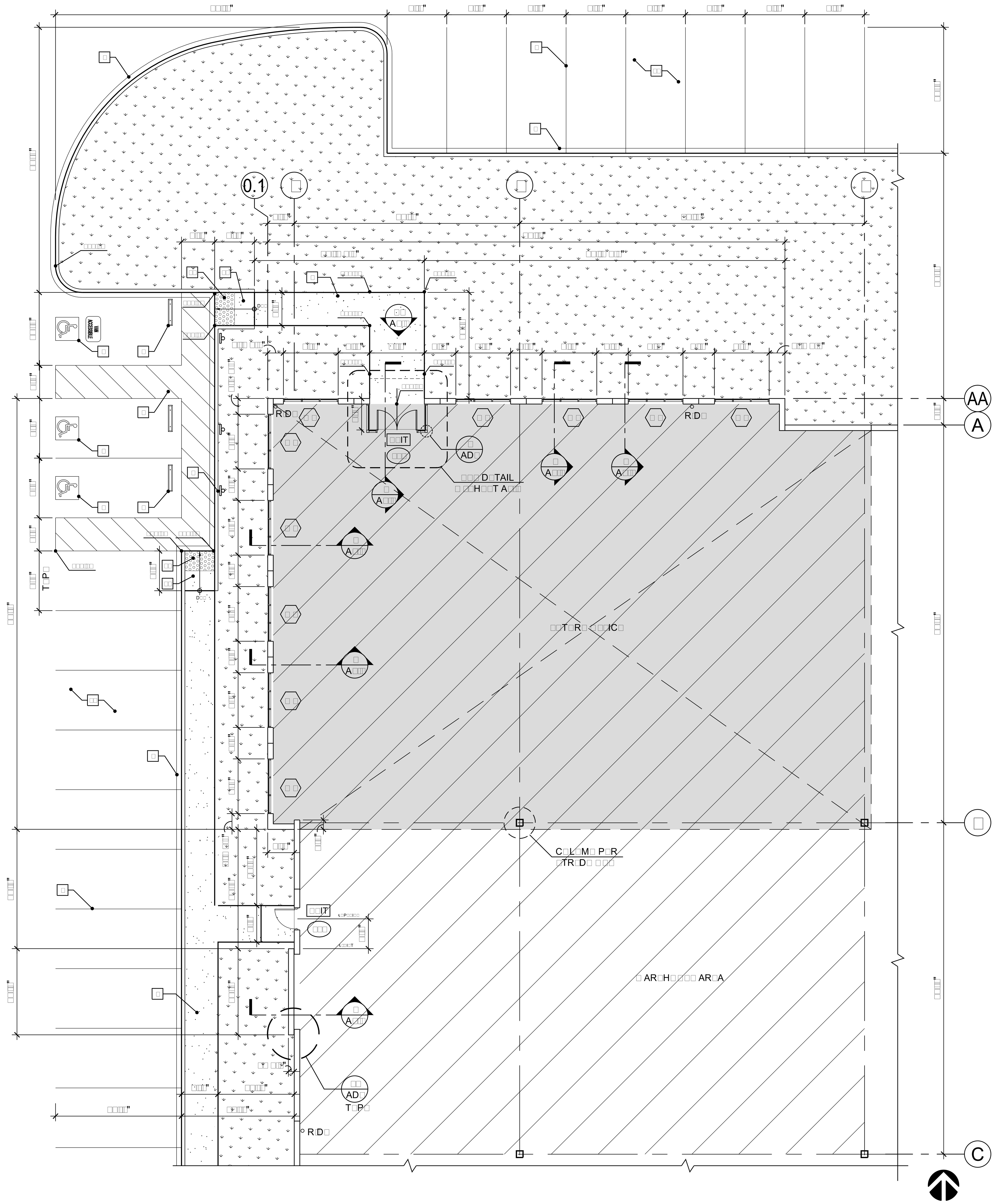

□□RTH□ □□T □□TR□ PLA□

□CAL□: □□" □ □□"

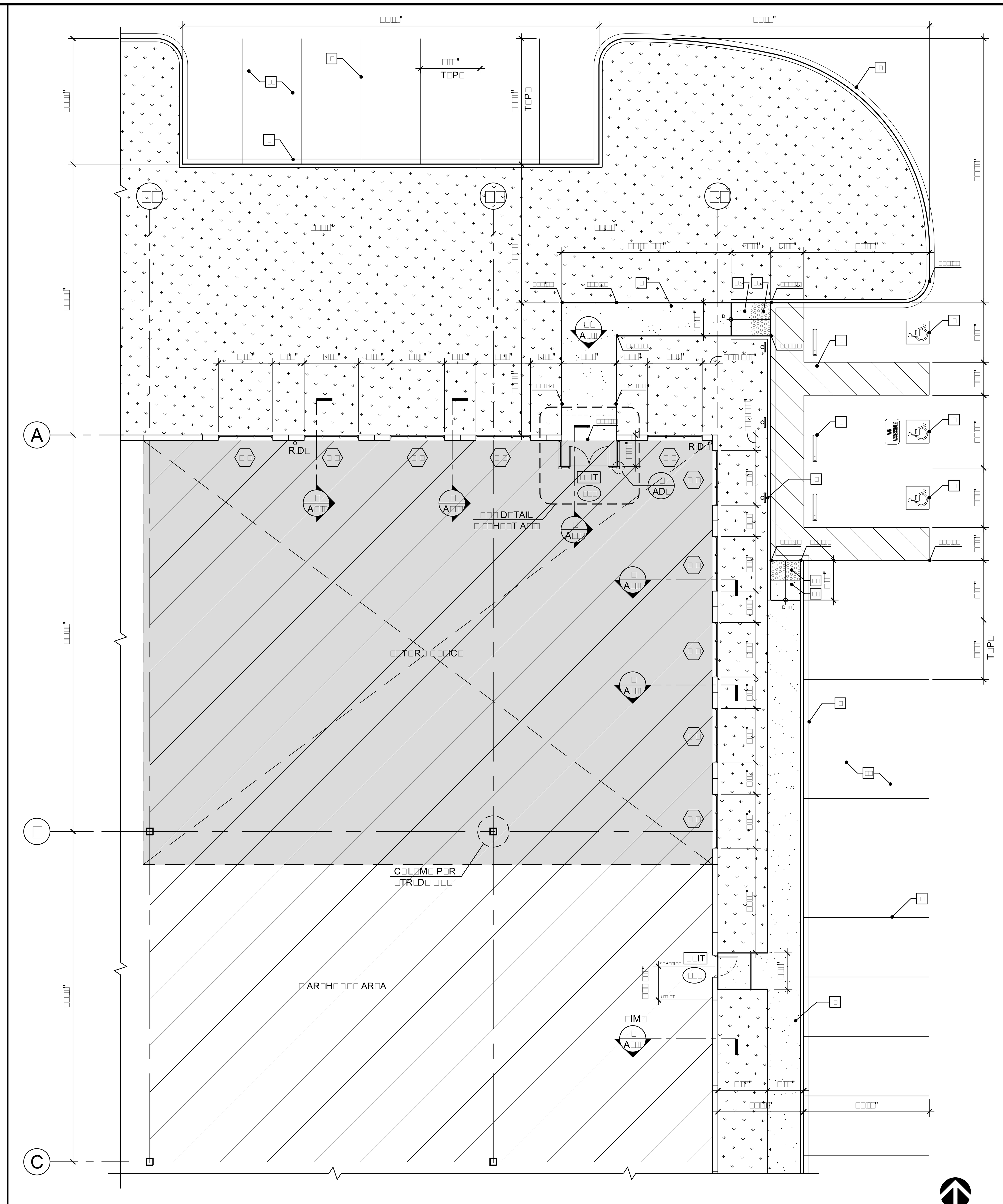

□□RTH□A□T □□TR□ PLA□

□CAL□: □□" □ □□"

A

C□□□TR□CTI□□ □□□□□T□□□

- □ PAI□T □TRIPI□□ □□ PA□□M□□T P□R C□□□T□ □P□C□□
- □ C□□□TR□CT T□P□□□ D□□R□□ ACC□□□I□L□ □TALL □□□□□
- □ C□□□TR□CT P□□T□D ACC□□□I□L□ □I□□ P□R □□ILDI□□ C□D□, A□D P□R D□TAIL
- □ C□□□TR□CT C□□CR□T□ □ID□□ AL□ □□□" MI□□
- □ C□□□TR□CT RI□□□□ □ □C□□CR□T□ C□R□ P□R CI□IL DRA□I□□□
- □ □□T □□□D
- □ I□T□R□ATI□□AL □□M□□L □□ ACC□□□I□ILIT□ □I□□
- □ □H□□L □T□P, P□R D□TAIL
- □ PATH □□ ACC□□□I□ILIT□ □□□□ ID□, MI□□AT T□P□ACC□□□ PAR□I□□ □ □□□"□□T MA□□CR□□□ □L□P□ A□D □□ MA□□ PARALL□L □L□P□□
- □□ ACC□□□I□L□ C□R□ ACC□□□ RAMP
- □□ P□□T□D "ACC□□□I□L□ □□TRA□C□ □I□□"
- □□ □□TR□□CAT□D D□M□□
- □□ A□PHALTIC C□□CR□T□ PA□□M□□T P□R □RADI□□ PLA□
- □□ P□□T □I□□ " ACC□□□I□L□ □□IT"
- □□ P□□T □I□□ " □□T A□ ACC□□□I□L□ □□IT"
- □□ □□□□ □□□ □ □□□" A□□□
- □□ □R□□□□ □□□ □ITH DRAI□ THR□ C□R□

□□□□□RAL □□□□□T□□□

- D□□R ID□□TI□ICATI□□, □□□ D□□R □CH□D□L□ □□ □H□□T A□□
- □□IT □I□□ □□□□ □□ILDI□□ □L□□R PLA□□
- □I□D□□ ID□□TI□ICATI□□ □□□ □I□D□□ T□P□ □□ □H□□T A□□
- □□□□□T□ ID□□TI□ICATI□□ □□□□□ □□□□□□T□□
- □R□□□□ □□□ □ □P□C PIP□ T□ C□R□
- R□D□ R□□□ DRAI□ L□CATI□□ □ □I□I□H □L□□R
- □□T□□T □□ □T□□□ □RAP □ARRI□R □□D□R □LA□
- □□T□R□ □□□IC□ AR□A

This Document, Either as Drawing or the Assemblage of Electronic Data, is the Property of Commerce Construction Co., L.P. ("Commerce"). This document, including all electronic data attached therein, shall not be reproduced, distributed, or used in whole or in part, without the written consent of Commerce. This document shall not be taken as a substitute for the original sealed document, and is without warranty of any kind either expressed or implied. Commerce is not responsible for edited or reproduced versions of this document. The acceptance or use of this document will be construed as an acceptance of the foregoing.

R□□I□I□□□ | DAT□

C□MM□RC□ C□□□TR□CTI□□ C□, L.P.
□□□□□ Cr□□□rad□ Par□a□ □□rth
□i□th □l□□r
Cit□ □□ Indu□tr□, California □□□□□
Telephone □□□□□□□
License □□□□□□

□□RTH□A□T □ □□RTH□ □□T □□TR□ PLA□

□□ILDI□□ A

MA□□□TIC □AD□□R L□□I□TIC□ C□□T□R

CTH "H" □ILLA□□ □□ PL□A□A□T PRAIRI□, □I

Dra□in□ Pl□t □ar

DRA□□ □□: D□ | DAT□: □□□□□□

CCC □□□ □□□: □□□□□

□H□□T □□□: A□□□

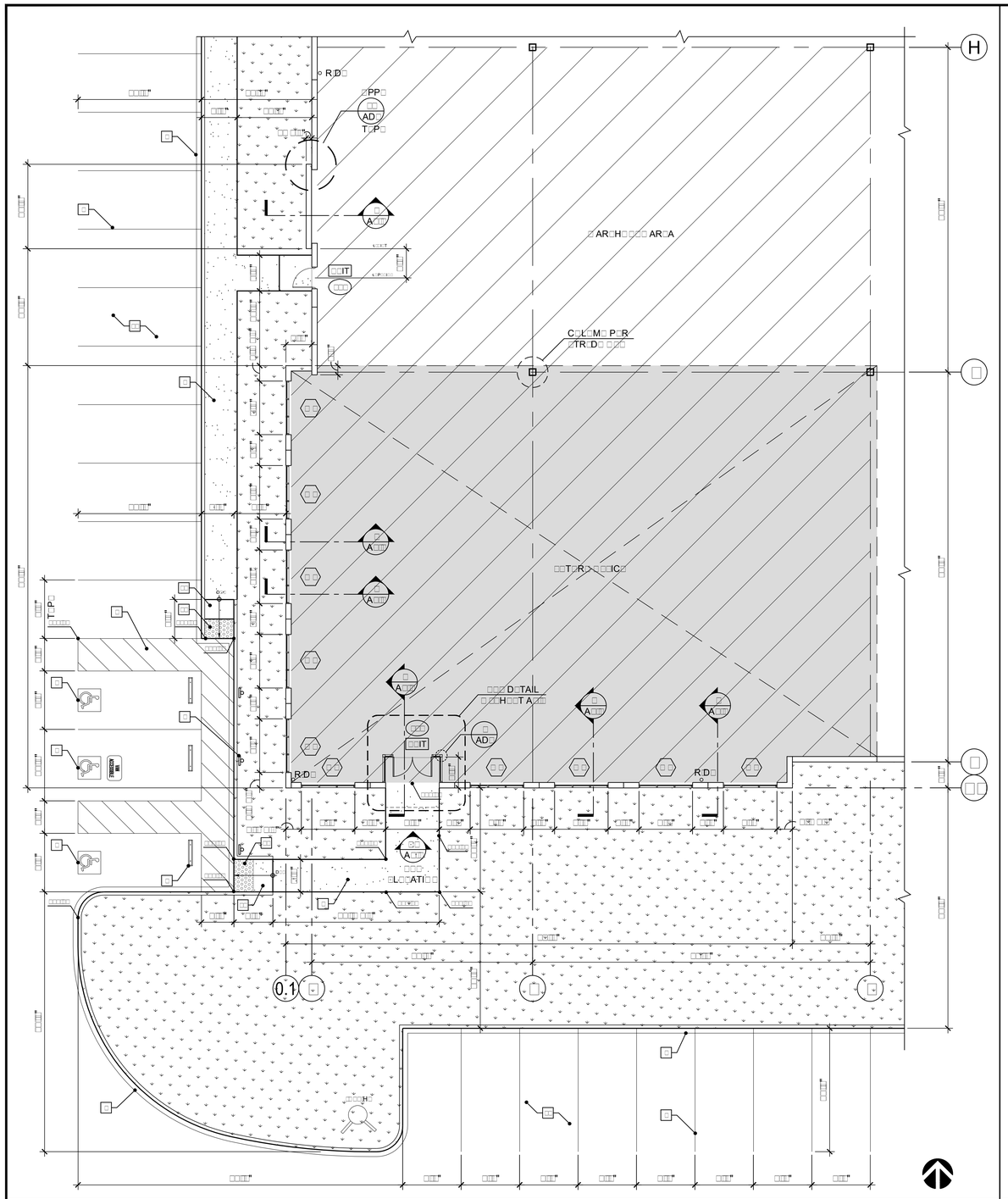

...TH. ..T ..TR. PLA.

.CAL..
..." . ..."

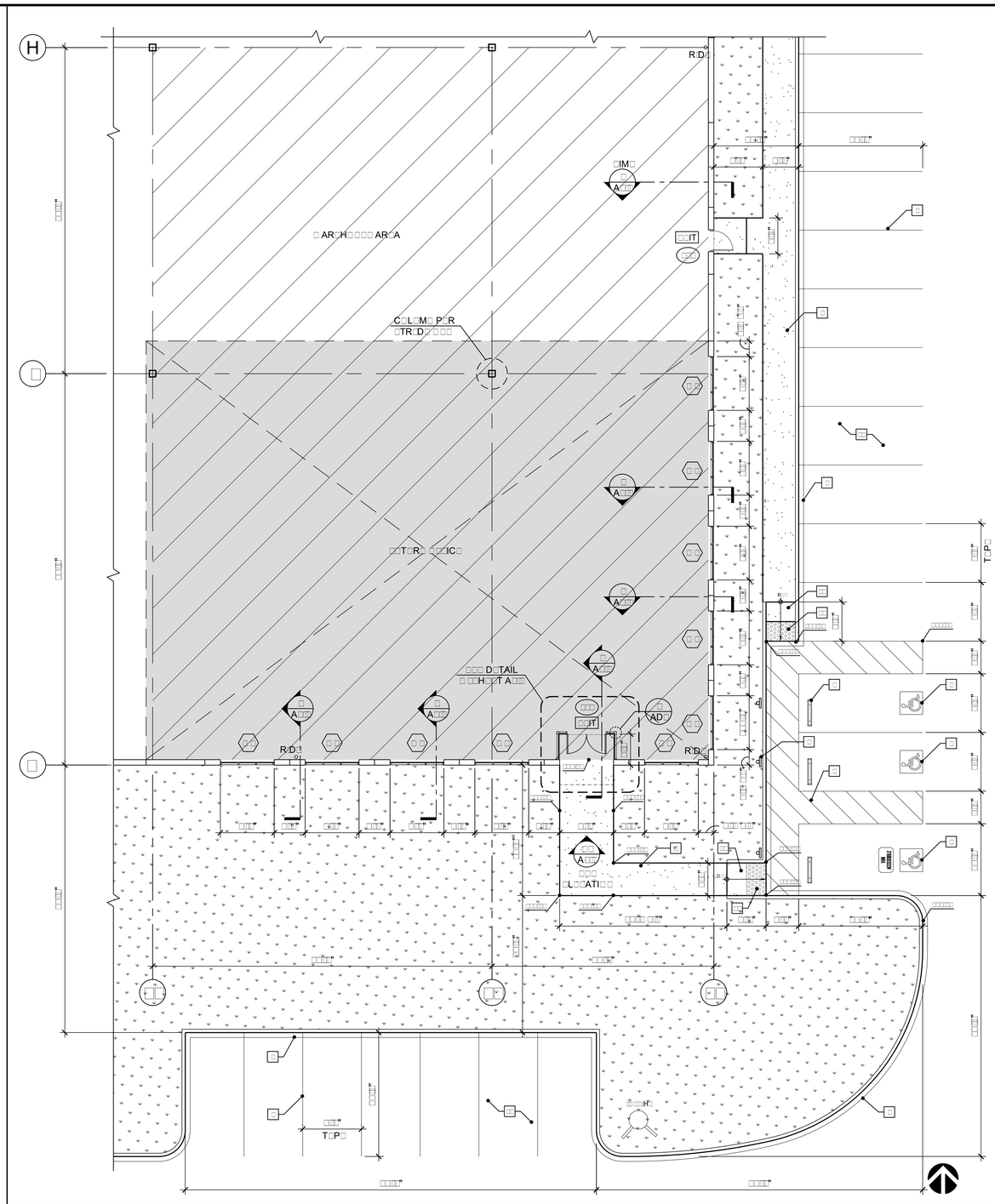

...TH.A.T ..TR. PLA.

.CAL..
..." . ..." A

C....TR.CTI... .....T...

- PAI.T .TRIPI.. .. PA..M..T P.R C...T. .P.C..
- C...TR.CT T.P... D..R... ACC...I.L. .TALL ..... (T...)
- C...TR.CT P..T.D ACC...I.L. ... P.R ..ILDI... C.D., A.D P.R D.TAIL ..... (T...)
- C...TR.CT C...CR.T. .ID.. AL. ...." MI..
- C...TR.CT RI..... . .C...CR.T. C.R. P.R CI.IL DRA. I...
- ..T ...D
- I.T.R.ATI..AL ..M..L .. ACC...I.ILIT. ... . (T...)
- . H..L .T.P, P.R D.TAIL ..... (AD.)
- PATH .. ACC...I.ILIT. .... ID., MI..AT T.P.ACC... PAR... . ...".T MA..CR... L.P. A.D .. MA.. PARALL.L L.P...
- ACC...I.L. C.R. ACC... RAMP ..... (T...)
- P..T.D "ACC...I.L. ..TRA.C. ..."
- ..TR..CAT.D D.M.. ..... (T...)
- A.PHALTIC C..CR.T. PA..M..T P.R .RADI.. PLA.
- P..T ... " ACC...I.L. ..IT"
- P..T ... " ..T A. ACC...I.L. ..IT"
- ...." A....
- .R..... ... . ITH DRAI. THR. C.R. ..... (AD.)

....RAL .....T...

- (...) D..R ID..TI.ICATI..,
  ... D..R .CH.D.L. .. .. .H..T A..
- (..IT) ..IT ... .ILDI... .L..R PLA..
- (...) . I.D.. ID..TI.ICATI..
  ... . I.D.. T.P... .. .H..T A..
- (.) .....T. ID..TI.ICATI.. ....T..
- (...) .R..... ... . .P.C PIP. T. C.R.
- R.D. R....DRAI. L.CATI.. . ..I.H .L..R
- ..T..T .. .T... . RAP .ARRI.R ..D.R .LA.
- ..T.R. ...IC. AR.A

The Document, Either in Drawing or the Assembly Manual, Is Property of Construction Co. L.P. ("Construction Co.") and Is Protected by Copyright. Construction Co. L.P. ("Construction Co.") Reserves All Rights, Including Without Limitation Its Rights to Copy, Reproduce, Publish, Sell, Distribute, Modify, Create Derivative Works, Transmit, Exhibit in Any Medium or Display, Any Portion Thereof, to Any Third Party, Without the Written Consent of Construction. This Document Is Provided on an "As Is" Basis, Without Any Warranty of Any Kind, Including Without Limitation Any Implied Warranty of Merchantability or Fitness for a Particular Purpose. Construction Co. L.P. Disclaims All Liability for Any Damages Arising Out of Your Use of This Document. By Your Use of This Document, You Agree to Indemnify, Defend, and Hold Construction Co. L.P. Harmless for Any Such Claims. Any "Use" Includes, Without Limitation, Modifying the Document, Creating Derivative Works, Distributing Copies, Displaying Or Performing Publicly, Or Making Available for Downloading, Sharing, or Streaming.

		DAT.
		R.
		DAT.
		R.

C.MM.RC. C...TR.CTI.. C..L.P.
....Cr...rad Par..a ...rth
..th ...
Cit. ..Indu.tr.. Cali.rnia
Tele.h.ne .....
Licen.e .....

...TH.A.T . ...TH. ..T ..TR. PLA.

..ILDI... A

MA...TIC .AD..R L...I.TIC C..T.R

CTH "H" .ILLA.. ...PL.A.A.T PRAIRI.., .. I

Dra.in. Pl.t .ar
1" = 1'
.. the ..t .ar i. .c.h.n. dra.in. ha. .n .. .een reduced .r enlar.ed .c.. .ri.inal .. the .t .ar i. .n .. e.ad. .. inch .n .. the .h.ical .. e .. dra.in. ha. .han.ed.

DRA. . .. DAT.
D. ... .

CCC ... ...

.H..T ...

A...

..A.. Architectural .....M LC 18 A Architectural .....A.....

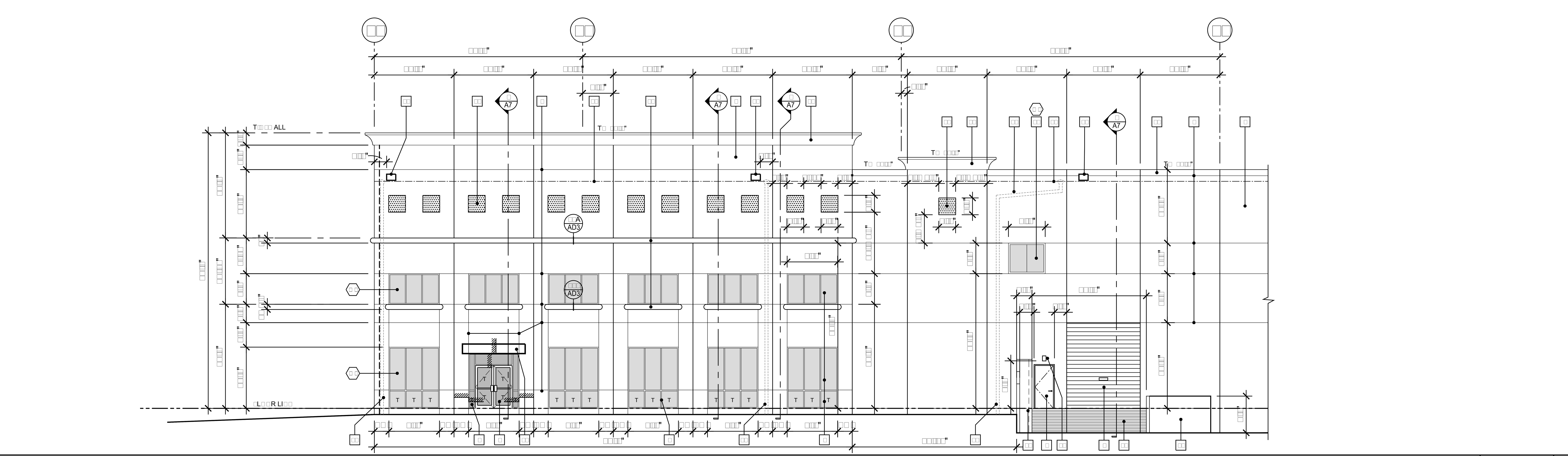

PARTIAL [illegible] ELEVATION — A

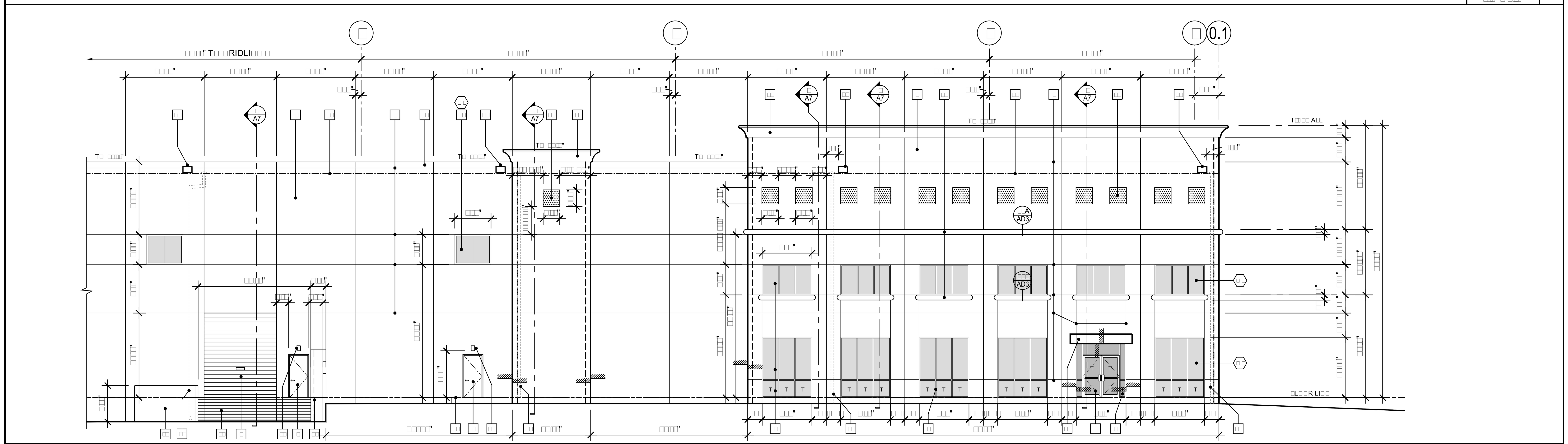

PARTIAL [illegible] ELEVATION — B

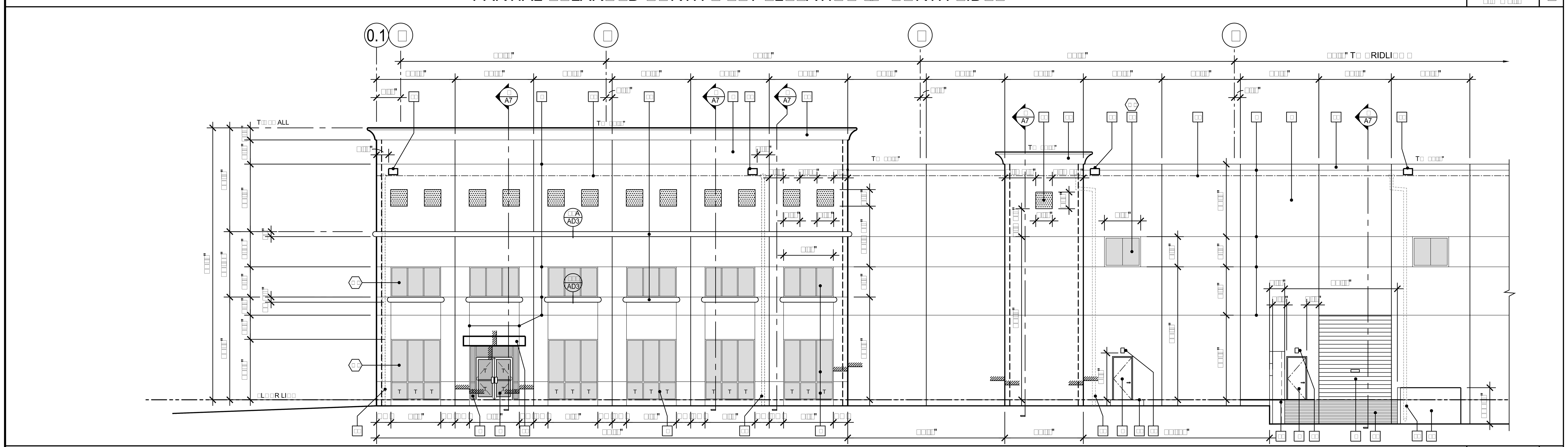

PARTIAL [illegible] ELEVATION — C

MATERIAL LEGEND

- [illegible] PRECAST CONCRETE PANEL
- ALUMINUM [illegible] SYSTEM CLEAR ANODIZED
- [illegible] SOLAR COOL GRAY [illegible] INSULATING GLASS [illegible] TEMPERED GLASS
- PAIR [illegible] NARROW STILE ALUMINUM [illegible] DOOR
- [illegible] DETAIL
- PANEL JOINT, SEE DETAIL
- [illegible] H PREFINISHED SECTIONAL OVERHEAD VERTICAL SECTIONAL LIFT DOOR [illegible] DETAIL
- [illegible] H PREFINISHED SECTIONAL OVERHEAD VERTICAL SECTIONAL LIFT DOOR [illegible] DETAIL
- [illegible] H HOLLOW METAL DOOR (PAINT TO MATCH ADJACENT BUILDING COLOR)
- [illegible] RECESSED PANEL [illegible], SEE DETAIL
- [illegible] H CORNICE WITH SCRATCH COAT SMOOTH FINISH, SEE DETAIL
- [illegible] H CORNICE WITH SCRATCH COAT SMOOTH FINISH, SEE DETAIL
- 6" Ø 8" Ø ROOF DRAIN AND 12" H x 18" W OVERFLOW, SEE DETAIL
- [illegible]
- [illegible]
- [illegible] TOP OF SHEATHING
- [illegible] DRAIN LEADER [illegible] INTERIOR SIDE OF BUILDING
- CANOPY [illegible] METAL COMPOSITE PANELS "ALUMALL [illegible]" CHAMPAGNE METALLIC [illegible] DETAIL
- GALVANIZED GRATE STAIR TREADS AND LANDINGS [illegible] GUARDRAIL SYSTEM [illegible] Ø STD. PAINTED STL PIPE HANDRAIL [illegible]
- [illegible] LAMINATED RUBBER DOCK BUMPER
- [illegible] H [illegible] DOCK LEVELER, TYP [illegible]
- POURED IN PLACE CONCRETE WALL
- CONCRETE RAMP
- CONCRETE STOOP, SEE DETAIL
- [illegible] H DIMENSIONS [illegible] WIDTH [illegible] ALUMINUM FRAME [illegible] INSULATED GLASS [illegible] STOREFRONT, SEE [illegible] TOTAL [illegible] FOR MORE INFO, SEE ENLARGED EXTERIOR ELEVATIONS SHEET [illegible]
- [illegible] H WINDOW [illegible] ALUMINUM FRAME [illegible] INSULATED GLASS [illegible] STOREFRONT [illegible], SEE [illegible] TOTAL [illegible]
- TRASH ENCLOSURE, SEE DETAIL
- WALL MOUNTED EXTERIOR LIGHT FIXTURES [illegible] ELECTRICAL [illegible]
- PAIR CHAIN LINK SLIDING GATE (PAINTED) PER DETAIL
- [illegible] HIGH CHAIN LINK FENCE PER DETAIL
- [illegible] COLOR [illegible]

NOTES:
FOR MORE INFORMATION REGARDING [illegible] SHEET A[illegible]

[illegible] CONSTRUCTION CO., L.P.
[illegible] Parkway North
City of Industry, California
Telephone [illegible]
License [illegible]

PARTIAL ENLARGED EXTERIOR ELEVATIONS
BUILDING A
MA[illegible]TIC [illegible] LOGISTICS CENTER
CTH "H" VILLAGE OF PLEASANT PRAIRIE, WI

Drawing Plot Bar — Note: this plot bar to confirm drawing has not been reduced or enlarged [illegible]

DRAWN BY / DATE
CCC [illegible]
SHEET [illegible]
A[illegible]

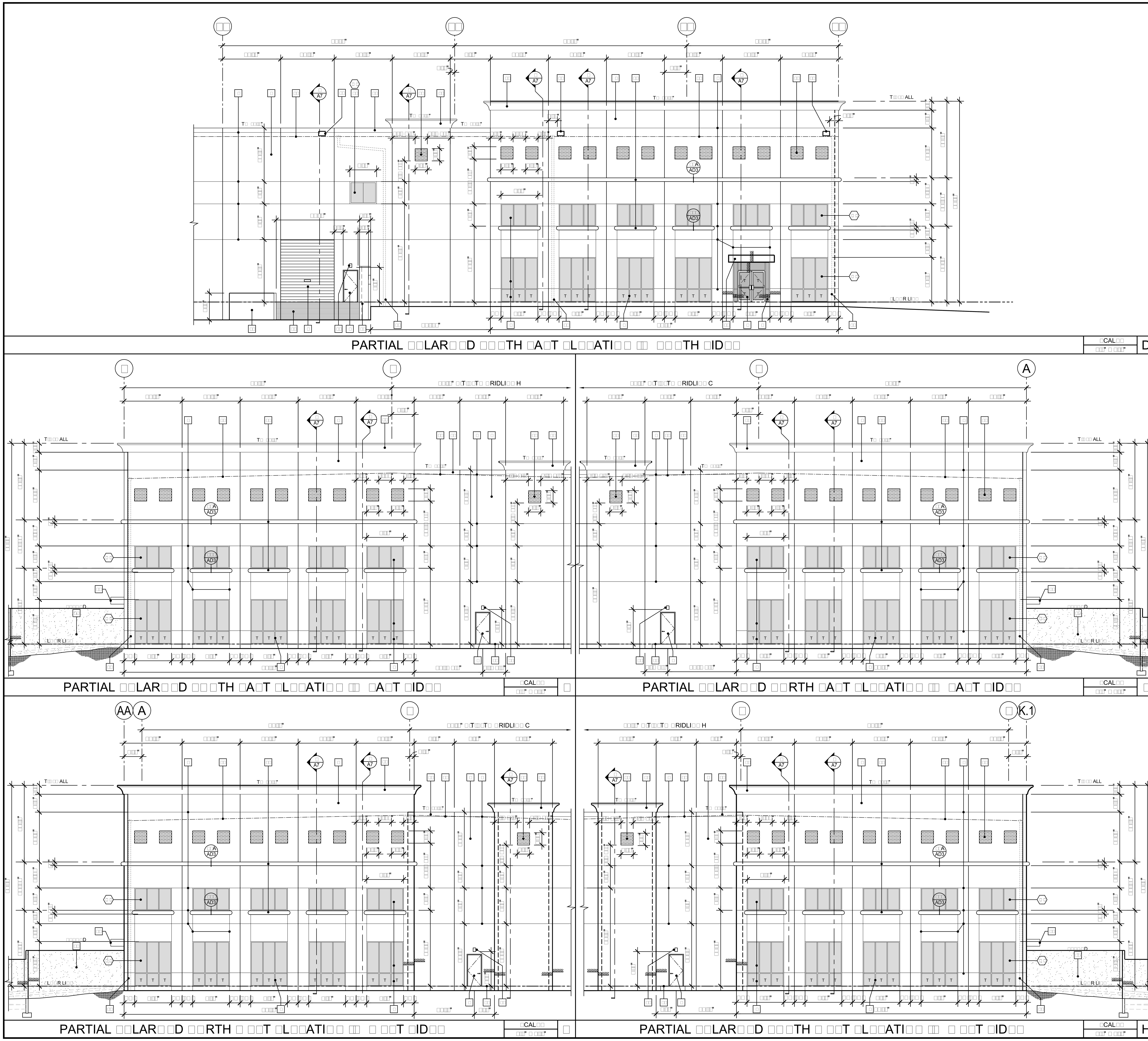

MAT□RIAL L□□□□D

- □ I□□□LAT□D PR□CA□T C□□CR□T□ PA□□L
- □ AL□MI□□M □RAMI□□ □□□T□M □CL□AR A□□DI□□D
- □ "□□LAR C□□L □RA□" □" TH□ I□□□LATI□□ □LA□□ □R□□L□CTI□□ □□R□AC□ □□ TH□ I□□ID□□ T □D□□□T□□ T□MP□R□D □LA□□
- □ PAIR □□□" □ □□□" □ARR□□ □TIL□ AL□M□□T□R□□R□□T D□□R
- □ □□□" "□" □R□□□□ □H□RI□□□R □□RT□□□□□ D□TAIL □/AD□
- □ PA□□L □□I□T □□□ D□TAIL □/AD□ □/AD□
- □ □□□" □ □□□□" H PR□□I□I□H□D □□CTI□□AL □□□RH□AD □□RTICAL □□CTI□□AL LI□T D□□R□□□□ D□TAIL □□/AD□ □□/AD□
- □ □□□□" □ □□□□" H PR□□I□I□H□D □□CTI□□AL □□□RH□AD □□RTICAL □□CTI□□AL LI□T D□□R□□□□ D□TAIL □□/AD□ □□/AD□
- □ □□□" □ □□□" H□LL□□ M□TAL D□□R □PAI□T T□ MATCH AD□AC□□T □□ILDI□□ C□L□R
- □□ □□□" □ □□□" □ □□□" R□C□□□□D PA□□L □L□C□□□T, □□□ D□TAIL □□/AD□
- □□ □□□" H C□R□IC□ □ ITH □CRATCH C□AT □M□□TH □I□I□H, □□□ D□TAIL □/AD□ □□C/AD□
- □□ □□" H C□R□IC□ □ ITH □CRATCH C□AT □M□□TH □I□I□H, □□□ D□TAIL □□A/AD□ □□□/AD□
- □□ 6" Ø 8" Ø ROOF DRAIN AND 12" H x 18" W OVERFLOW, □□□ D□TAIL □/AD□ □/AD□
- □□ □□T □□□D
- □□ □□T □□□D
- □□ R□□□LI□□ □□ T□P □□ □H□ATHI□□□
- □□ R□□□DRAI□ L□AD□R □□□□□D □ I□T□RI□R □ID□ □□ □□ILDI□□
- □□ CA□□P□ □ □M□TAL C□MP□□IT□ PA□□L□ "AL□MALL □□□□ □□RI□□" CHAMPA□□□ M□TALLIC□□□□ D□TAIL □/AD□
- □□ □AL□A□I□□D □RAT□ □TAIR TR□AD□ A□D LA□DI□□ □□" H□□□ARDRAIL □□□T□M □□□" Ø STD. PAINTED □TL□PIP□ HA□DRAIL □□□□ D□T□□AD□□
- □□ □□" □□□" □□ □□□" LAMI□AT□D R□□□□R D□C□ □□MP□R
- □□ □□□" □ □□□" H □L□C□□□T □□R □□T□R□ D□C□ L□□□L□R, T□P□T□TAL □ □□
- □□ P□□R□D I□ PLAC□ C□□CR□T□ □ ALL
- □□ C□□CR□T□ RAMP
- □□ C□□CR□T□ □T□□P, □□□ D□TAIL □/AD□
- □□ □□□" H □DIM□□ARI□□ □IDTH □ I□D□□ □ □□" AL□M□□RAM□ □ □" TH□□I□□□LAT□D □LA□I□□ □ □□R□□ TI□T, □□□ □/AD□ □/AD□ □T□TAL □ □□
  □□R M□R□ I□□□□, □□□ □□LAR□□D □□T□RI□R □L□□ATI□□□ □H□□T A□□ □ A□□
- □□ □□□" □ □□□" H □ I□D□□ □ □□" AL□M□□RAM□ □ □" TH□□ I□□□LAT□D □LA□I□□ □ □□R□□ TI□T □ □□□" A□□□, □□□ □/AD□ □/AD□ □T□TAL □ □□
- □□ TRA□H □□CL□□□R□, □□□ D□TAIL □/AD□
- □□ □ ALL M□□□T□D □□T□RI□R LI□HT □I□T□R□ □ □□□" A□□□ □□□ □L□CTRICAL D□ □□□
- □□ PAIR CHAI□ LI□□ □LIDI□□ □AT□ □PAI□T□D□ P□R D□TAIL □/AD□ □□/AD□
- □□ □□□" HI□H CHAI□LI□□ □□□C□ P□R D□TAIL □/AD□
- □□ □□" C□L□R □A□

□□T□□

□□R M□R□ I□□□RMATI□□ R□□ARDI□□ □ I□D□□ T□P□□ , □□□ □H□□T A□□

This Document, Either as Drawing or the Assemblage of Electronic Data, is the Property of Commerce Construction Co., L.P. ("Commerce"). This document, including all electronic data attached therein, shall not be reproduced, distributed, edited, or used in any manner, in whole or in part, without the written consent of Commerce. This document shall not be taken as a replacement for the official sealed document, and is without warranty of any kind either expressed or implied. Any person or organization using or relying on this document is responsible for its accuracy and completeness. Commerce is not responsible for edited or reproduced versions of this document. The acceptance or use of this document will be construed as an acceptance of the above.

DAT□ | R□□I□I□□□ | DAT□ | R□□I□I□□□

C□MM□RC□ C□□□TR□CTI□□ C□, L.P.
□□□□□ Cr□□r□ad□ Par□□a□ □□rth
Ci□th □l□□r
Cit□ □□ Indu□tr□, California □□□□□□□
Tele□h□ne □□□□□□□□□□□
Licen□e □□□□□□□□

PARTIAL □□LAR□□D □□T□RI□R □L□□ATI□□□

□□ILDI□□ A

MA□□□TIC □AD□□R L□□I□TIC□ C□□T□R

CTH "H" □ILLA□□ □□ PL□A□A□T PRAIRI□, □I

Dra□in□ Pl□t □ar

□□e thi□ □l□t □ar t□ c□n□ir□ dra□in□ ha□ n□t □een reduced □r enlar□ed □r□□ □ri□inal. I□ thi□ □l□t □ar i□ n□t e□actl□ □ inch l□n□ the □h□□ical □i□e □□ dra□in□ ha□ chan□ed□

DRA□□ □□ DAT□
D□ □□□ □□□□□□

CCC □□□ □□□□
□□□□□

□H□□T □□□
A□□□

□□A□□□Architectural□□□□□□M□LC□ld□A Architectural□□□□□□A□□□□d□□

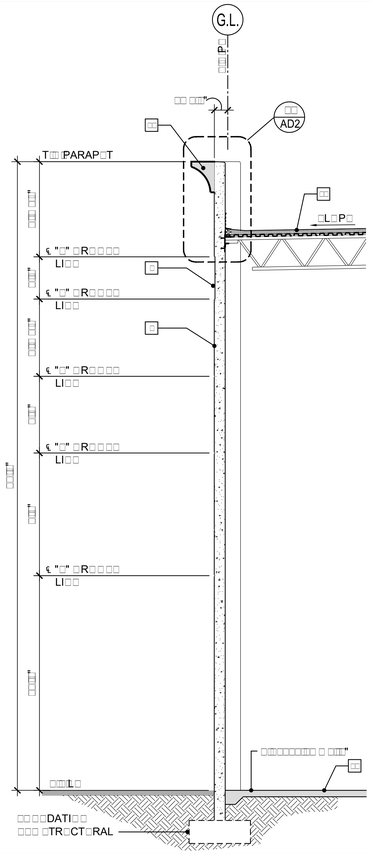

ALL CTI

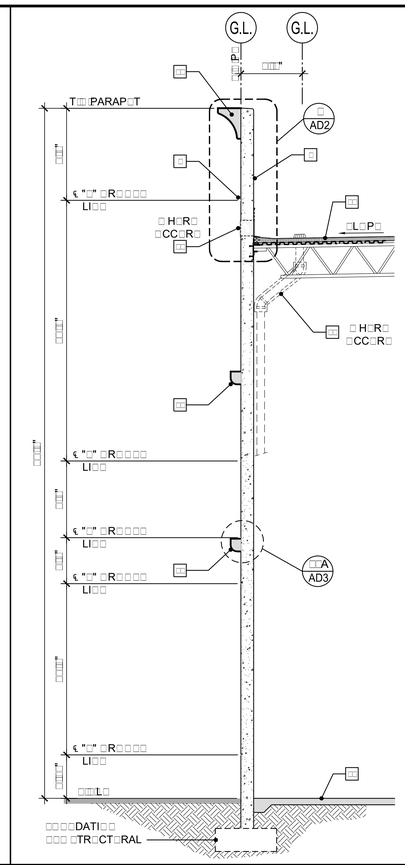

ALL CTI

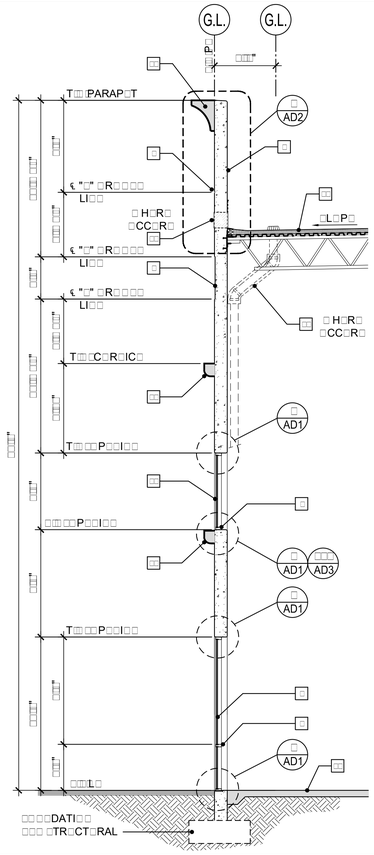

ALL CTI

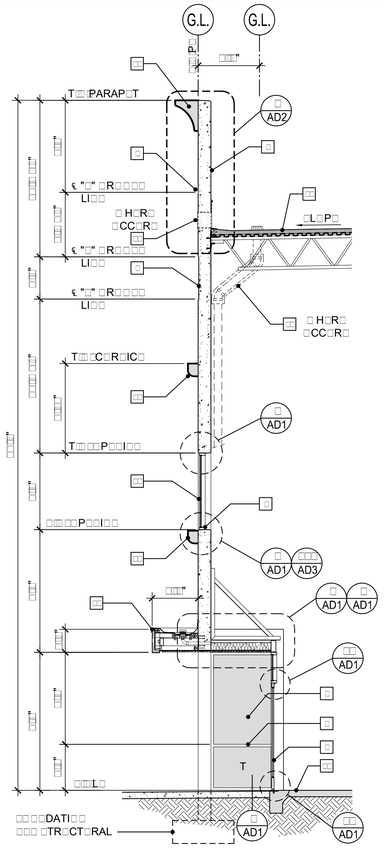

ALL CTI

CTI T

- I LAT D PR CA T C CR T PA L
- AL MI M RAMI CL T M CL AR A DI D
- "LAR C L RA" TH I LATI LA R L CTI R AC TH I ID
- PAIR "ARR TIL AL M T R R T D R
- "R H RI R RT D TAIL AD
- " H PR H D CTI AL RH AD RTICAL CTI AL LET D R D TAIL AD AD
- " H PR H D CTI AL RH AD RTICAL CTI AL LET D R D TAIL AD AD
- " H LL M TAL D R PAI T T MATCH AD AC T ILDI C L R
- " R C D PA L L C T, D TAIL AD
- " H C R IC ITH CRATCH C AT M TH I H, D TAIL AD AD C
- " H C R IC ITH CRATCH C AT M TH I H, D TAIL AD A AD
- 6" Ø / 8" Ø ROOF DRAIN AND 12" H x 18" W OVERFLOW PP R L CATI R PLA A D D TAIL AD D
- T D
- T D
- R LI " I RI ID I LATI R R M TAL D C ITH MIL ADH R D PDM M M RA R R CAM TR CT RAL
- CA P TAL C MP IT PA L "AL MALL RI " CHAMPA M TALLIC D TAIL AD
- AL A D RAT TAIR TR AD A D LA DI " H ARDRAIL TM /" Ø STD. PAINTED STEEL PIPE HA DRAIL D TAIL AD
- " " LAMI AT D R R D C MP R AD
- C CR T RAMP
- " H " I D " AL M RAM A D " TH I LAT D LA RA TI T D TAIL AD AD
- " H " I D " AL M RAM A D " TH I LAT D LA RA TI T " A D TAIL AD AD
- C CR T LA TR CT RAL

This Document, Either in Drawing or the Assembly Of Which It Is Part, Is Property Of Construction Co. L.P. ("Construction") and Is Not To Be Used, Loaned, Copied, Reproduced, In Whole Or In Part, Nor Its Contents Disclosed Or Made Available To Others Without The Written Consent Of Construction. This Notice Shall Be Conspicuously Displayed On Any Such Reproduction In Whole Or In Part. Any Such Reproduction Shall Include Construction's Name, Logo, Or Other Identifying Mark. Any Use Of This Document Or Its Contents Other Than As Authorized In Writing By Construction Is Prohibited. Any Alteration, Or Other Modification Of This Document Without Construction's Written Consent Is Prohibited. Any Such Alteration, Modification, Or Other Use Of This Document Without Construction's Written Consent Shall Be Deemed A Material Alteration Of The Document.

DAT	
DAT	
R	

C M RC C TR CT C L P
Cr Tr ad Par a rth
th
Cit Indu tr, Cali mia
Tele h ne
Licen e

ALL CTI
ILDI A
MA TIC AD R L TIC C T R
CTH "H" ILLA PL A T PRAIRI,

Dra in Pl t ar
" "
Ca Bl t ar t ir ir ir dra ha n t een reduced r enlarged ir ir ir dra n t enlarged n ch f h the ri al th ra ha h ha ha ed

DRA DAT
D

CCC

H T

A

WALL SECTION

A Architectural M LC hd A Architectural A d

H
D
C
A
G.L.
RAMP
8'-3 1/2"±
6"Ø BOLLARD
TRASH ENCLOSURE
A

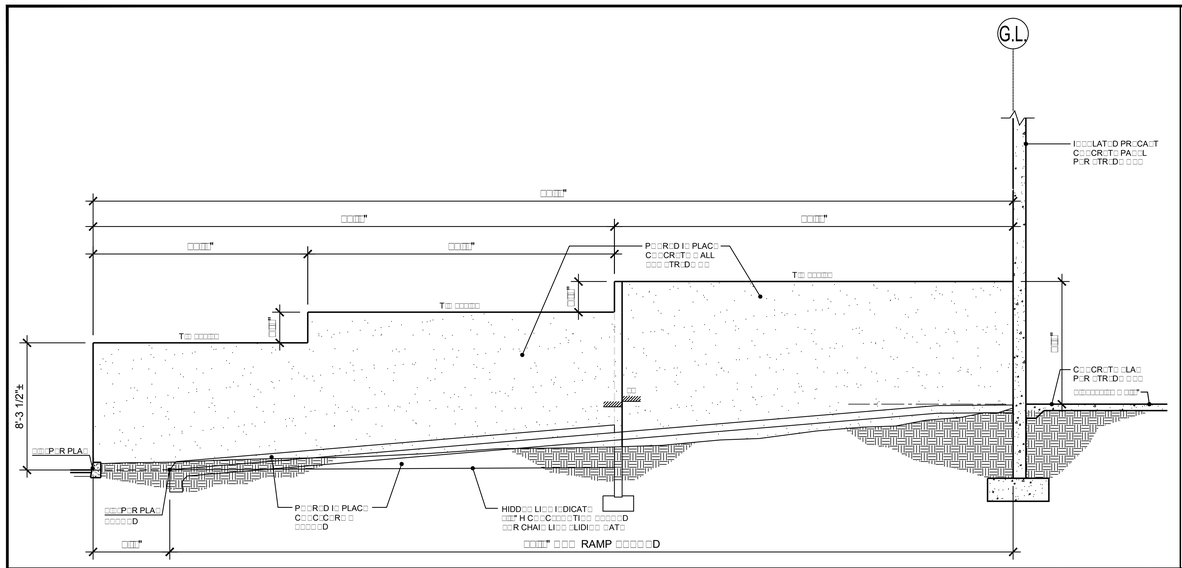

RAMP CTI

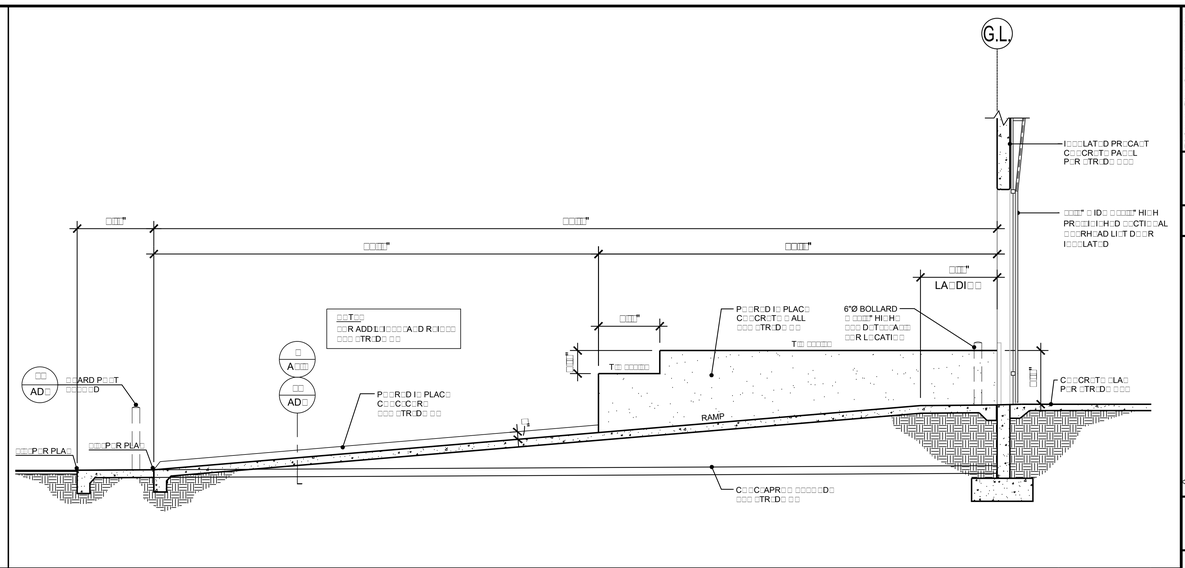

RAMP CTI

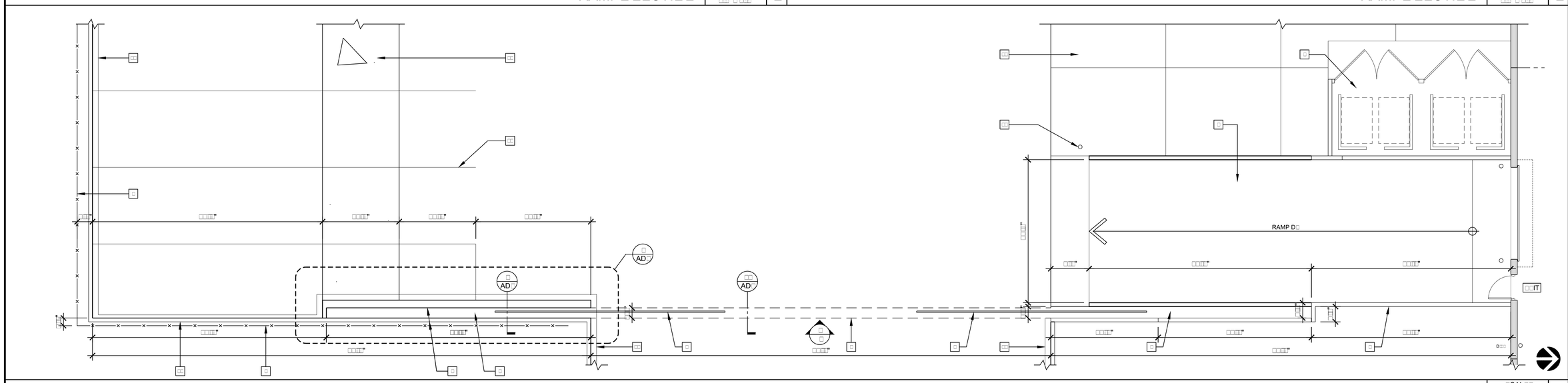

RAMP P R D I PLAC C CR T PA L CR ALL PLA

C

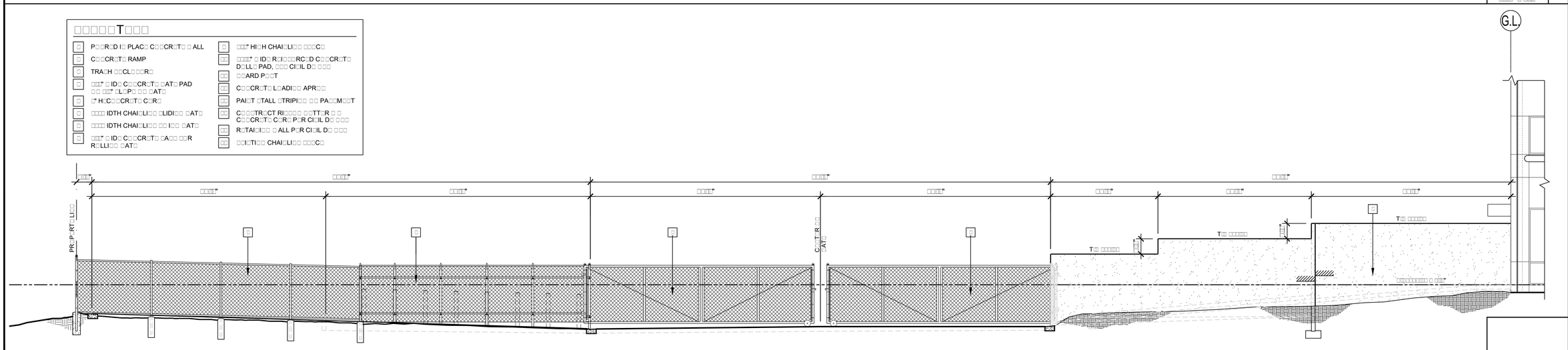

RAMP P R D I PLAC C CR T PA L CR ALL CTI L ATI

RAMP CTI CR ALL PLA L
ILDI A
MA TIC AD R L I TIC C T R
CTH "H" ILLA PL:A:A:T PRAIRI: I

DRA DAT
D
CCC
H T
A

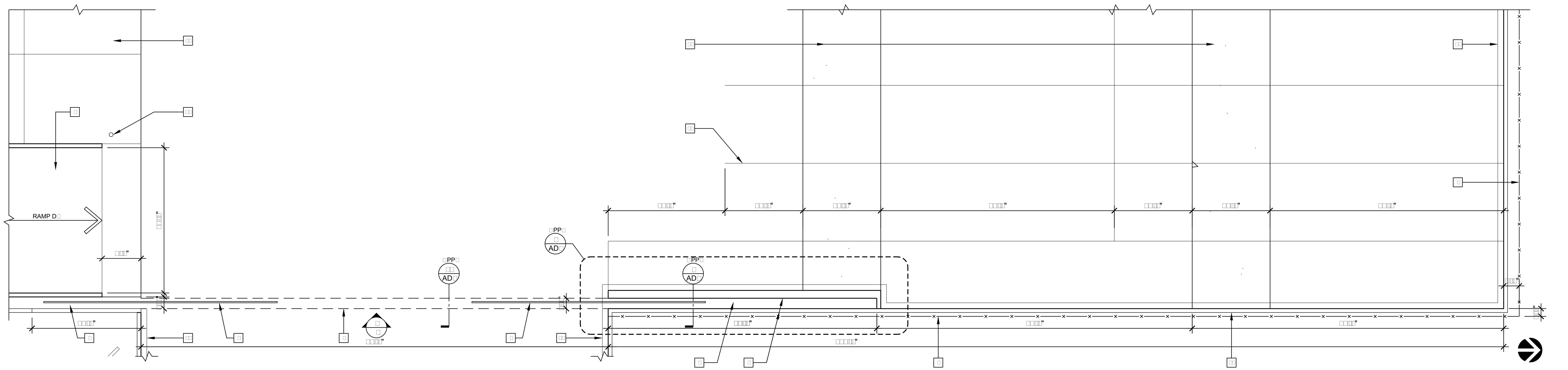

RAMP □ P□□R□D I□ PLAC□ C□□CR□T□ PA□□L □CR□□□□ ALL□PLA□

□CAL□□ □□□" □ □□□" D

□□□□□T□□□

□ P□□R□D I□ PLAC□ C□□CR□T□ □ ALL	□ □□□" HI□H CHAI□LI□□ □□□C□
□ C□□CR□T□ RAMP	□□ □□□□" □ ID□ R□I□□□RC□D C□□CR□T□ D□LL□ PAD, □□□ CI□IL D□ □□□
□ TRA□H □□CL□□□R□	□□ □□ARD P□□T
□ □□□" □ ID□ C□□CR□T□ □AT□ PAD □□ □□□" □L□P□ □□ □AT□	□□ C□□CR□T□ L□ADI□□ APR□□
□ □" H□C□□CR□T□ C□R□	□□ PAI□T □TALL □TRIPI□□ □□ PA□□M□□T
□ □□□□ IDTH CHAI□LI□□ □LIDI□□ □AT□	□□ C□□□TR□CT RI□□□□ □□TT□R □ □ C□□CR□T□ C□R□ P□R CI□IL D□ □□□
□ □□□□ IDTH CHAI□LI□□ □□ I□□ □AT□	□□ R□TAI□I□□ □ ALL P□R CI□IL D□ □□□
□ □□□" □ ID□ C□□CR□T□ □A□□ □□R R□LLI□□ □AT□	□□ □□I□TI□□ CHAI□LI□□ □□□C□

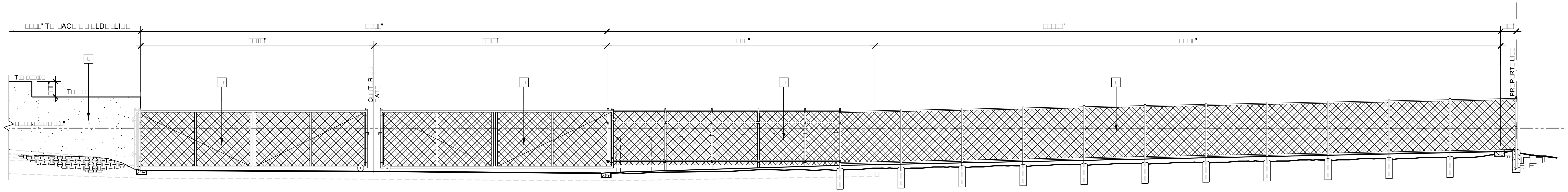

RAMP □ P□□R□D I□ PLAC□ C□□CR□T□ PA□□L □CR□□□□ ALL□ □□CTI□□ □ □L□□ATI□□

□CAL□□ □□□" □ □□□"

□CAL□□

This Document, Either as Drawing or the Assemblage of Electronic Data, is the Property of Commerce Construction Co., L.P. ("Commerce")

C□MM□RC□ C□□□TR□CTI□□ C□, L.P.
Telephone
License

□CR□□□□ ALL PLA□ A□D □L□□ATI□□

□□ILDI□□ A

MA□□□TIC □AD□□R L□□I□TIC C□□T□R

CTH "H" □ILLA□□ □□ PL□A□A□T PRAIRI□, □I

Dra□in□ Pl□t □ar

DRA□ □ □□ DAT□

CCC □□□ □□□

□H□□T □□□

A□□□

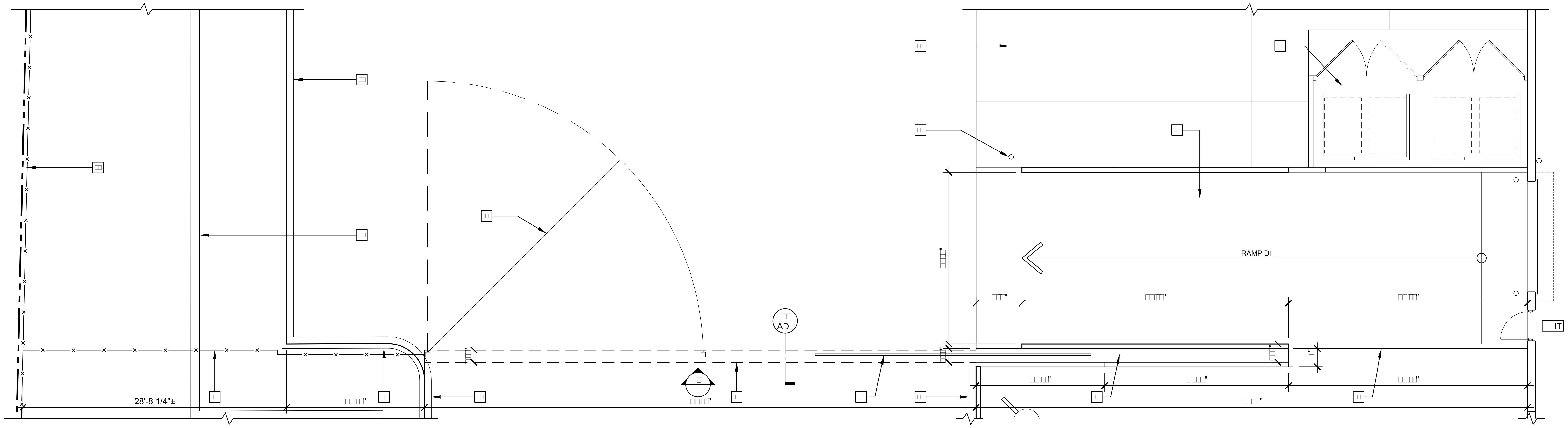

RAMP □ P□□R□D I□ PLAC□ C□□CR□T□ PA□□L □CR□□□□ ALL□PLA□

□CAL□□ □□□□" □ □□□□"

□□□□□□T□□□

- □ P□□R□D I□ PLAC□ C□□CR□T□ □ ALL
- □ C□□CR□T□ RAMP
- □ TRA□H □□CL□□□R□
- □ □□□" □ ID□ C□□CR□T□ □AT□ PAD □□ □□□" □L□P□ □□ □AT□
- □ □" H□C□□CR□T□ C□R□
- □ □□□□ IDTH CHAI□LI□□ □LIDI□□ □AT□
- □ □□□□ IDTH CHAI□LI□□ □□ I□□ □AT□
- □ □□□" □ ID□ C□□CR□T□ □A□□ □□R R□LLI□□ □AT□
- □ □□□" HI□H CHAI□LI□□ □□□C□
- □□ □□□□" □ ID□ R□I□□□RC□D C□□CR□T□ D□LL□ PAD, □□□ CI□IL D□ □□□
- □□ □□ARD P□□T
- □□ C□□CR□T□ L□ADI□□ APR□□
- □□ PAI□T □TALL □TRIPI□□ □□ PA□□M□□T
- □□ C□□□TR□CT RI□□□□□ □□TT□R □ □ C□□CR□T□ C□R□ P□R CI□IL D□ □□□
- □□ R□TAI□I□□ □ ALL P□R CI□IL D□ □□□
- □□ □□I□TI□□ CHAI□LI□□ □□□C□

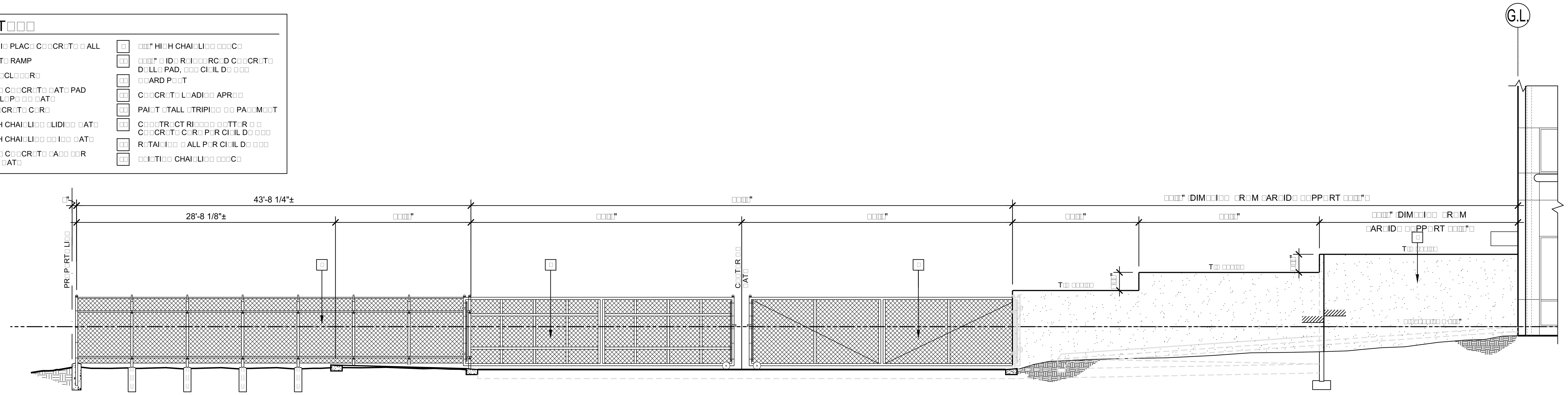

RAMP □ P□□R□D I□ PLAC□ C□□CR□T□ PA□□L □CR□□□□ ALL□ □□CTI□□ □ □L□□ATI□□

□CAL□□ □□□□" □ □□□□"

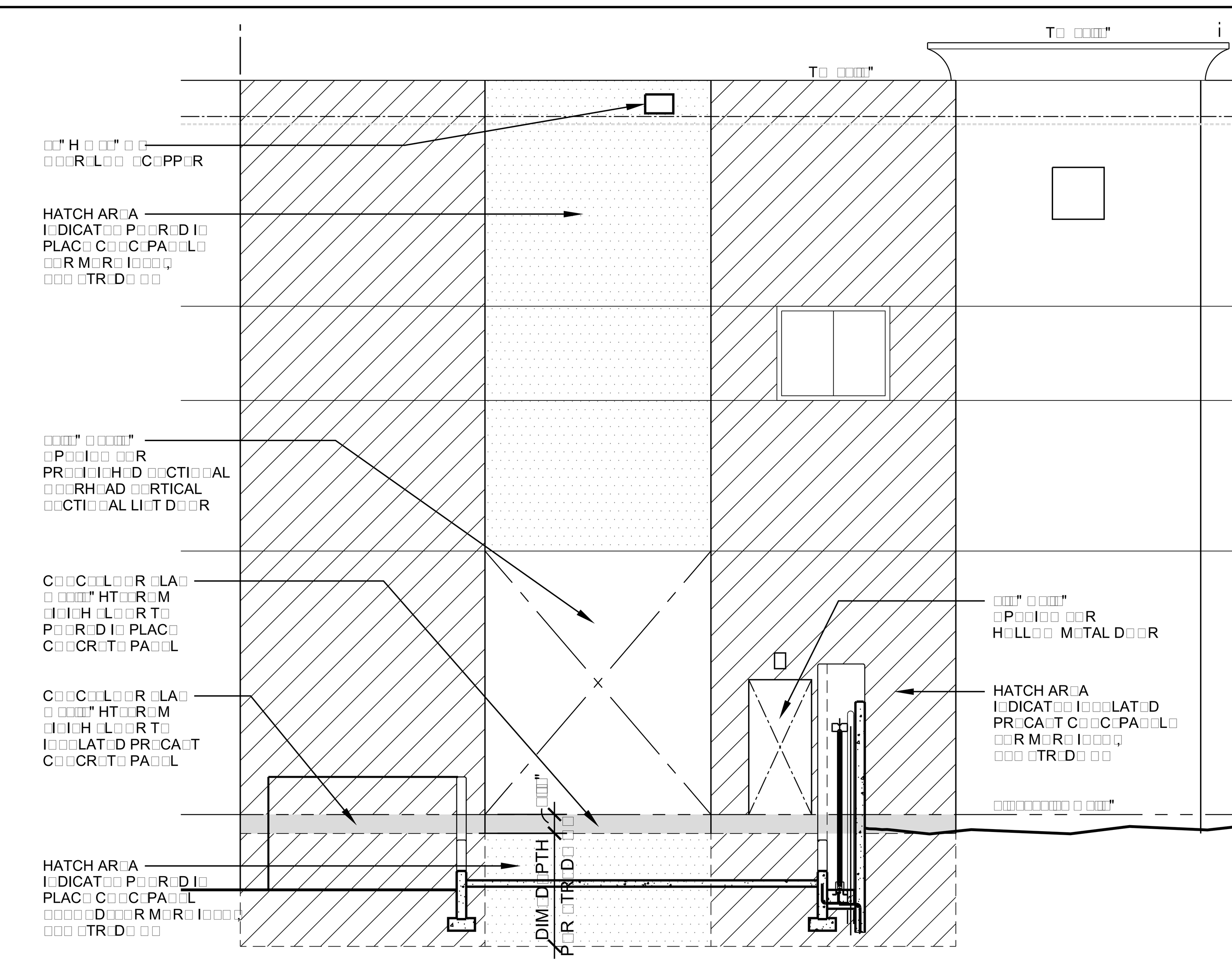

RAMP & POURED IN PLACE CONCRETE PANEL SCREENWALL: SECTION & ELEVATION (TYP.)

□CAL□□ □□□□" □ □□□□"

This Document, Either as Drawing or the Assemblage of Electronic Data, is the Property of Commerce Construction Co., L.P. ("Commerce"). This document, including all electronic data attached therein, may not be reproduced, distributed, edited, used or implemented in any way in whole or in part, without the written consent of Commerce. This document shall not be taken as a document of the official sealed document, and is without warranty of any kind either expressed or implied. Commerce is not responsible for the accuracy and completeness of this document if reproduced or edited in electronic form. The acceptance or use of this document will be construed as an acceptance of the foregoing.

R□□I□I□□□ | DAT□

C□MM□RC□ C□□□TR□CTI□□ C□,L.P.
□□□□□ Cr□□□r□ad□Par□a□□□rth
□i□th □l□□r
Cit□ □□Indu□tr□, Cali□□rnia □□□□□□□□□□
Tele□h□ne □□□□□□□□□□□□
Licen□e □□□□□□□□□

□CR□□□□ ALL PLA□ A□D □L□□ATI□□

□□ILDI□□ A

MA□□□TIC □AD□□R L□□I□TIC C□□T□R

CTH "H" □ILLA□□ □□ PL□A□A□T PRAIRI□, □I

Dra□in□ Pl□t □ar

□□e thi□ □l□t □ar t□ c□n□ir□ dra□in□ ha□ n□t □een reduced □r enlar□ed □□□ □ri□inal □ I□ thi□ □l□t □ar i□ n□t e□actl□ □ inch l□n□ the □h□□ical □i□e □□dra□in□ ha□ chan□ed□

DRA□ □ □□ D□ □□□ | DAT□ □□□□□□

CCC □□□ □□□□ □□□□□

□H□□T □□□ A□□□

□□A□□□Architectural□□□□□□□M□LC □ld□□A Architectural□□□□□□A□□□□d□□

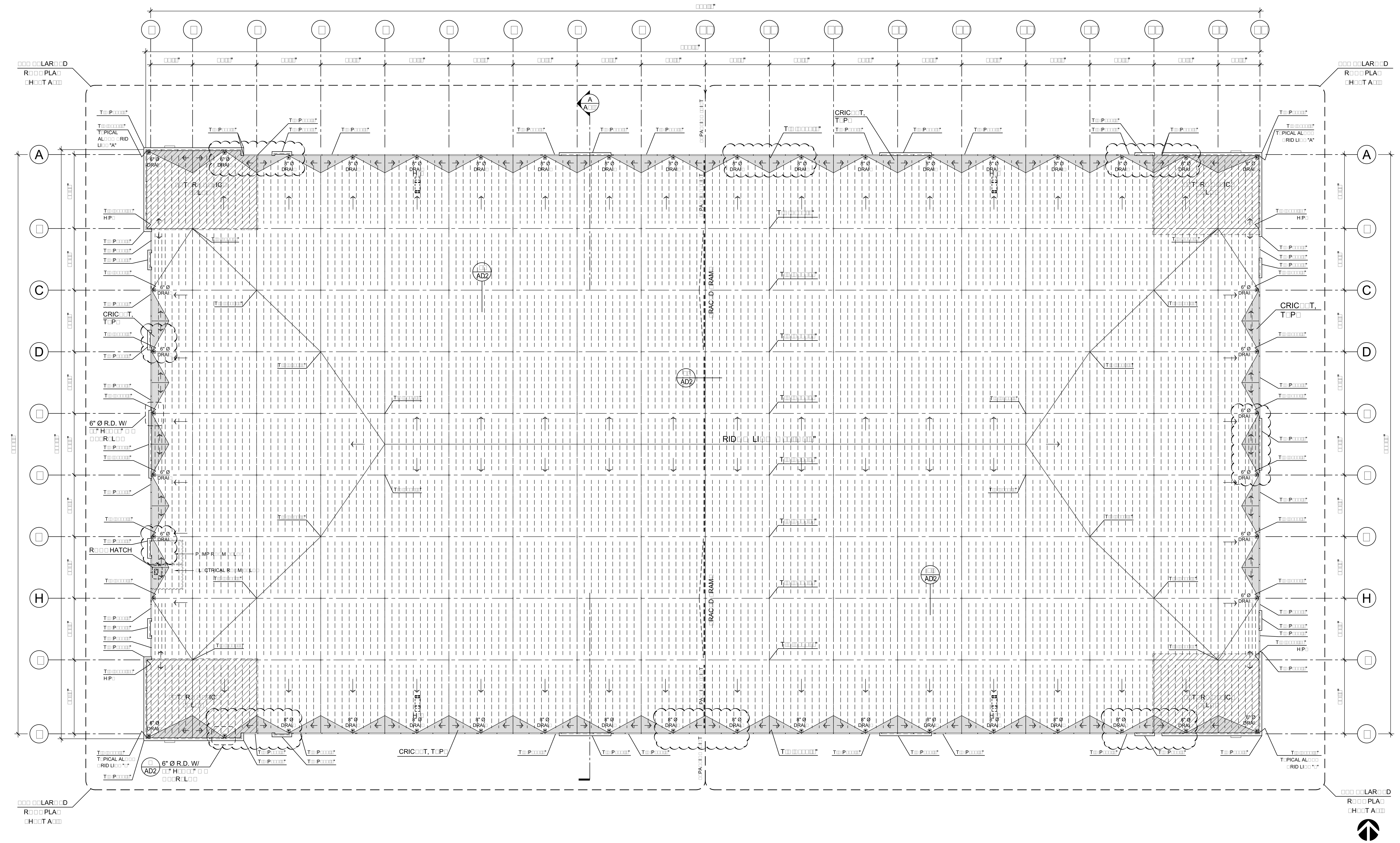

RALL R PLA

CAL

A

R L D

ROOF JOIST
MAIN LINE
BRANCH LINE
EF - #
ROOF EXHAUST FAN PER MECHANICAL DRAWINGS . . . . AD AD
H ATI A D TILATI IT M CH D A D D TAIL AD
METAL ROOF SCUTTLE: "BILCO" TYPE "NB" 30" x 54" OR EQUAL APPROVED SEE DETAIL . . . . AD
CRIC T
T P PARAP T
H P — HI H P I T
L P — L P I T
R D — R DRAI
R L P " P R T , MI TR CT RAL DRA R R L ATI
ROOF DRAIN AND OVERFLOW SCUPPER SEE DETAILS . . . . . . AD AD
FIRE SPRINKLER HEADS

NOTES:

TR CT RAL DRA R R L ATI

R L P MI IM M R L P I " P R T

R I T

R I T M
" M TAL D C
" I RI ID I LATI R
MIL ADH R D PDM M M RA

R T

ALL DIM I A D R C DITI HALL RI I D TH IT A D ITH TH M CHA ICAL C TRACT R PRI R T C TR CTI R P I

RI I ALL IT C TRACT R L CAT T CL AR PRI L R H AD R P I

R IPM T CH D L R I HT

R IPM T CH D L

HA T A MA ACT R R

	R R C	M D L

DIRECT GAS-FIRED HEATER : MANUFACTURER- CAMBRIDGE

	R R C	M D L	T L
	H THR H		,

L CTRIC IT H AT R MA ACT R R

	R R C	M D L	

RT A L CTRIC RA D

	R R C	M D L	T L

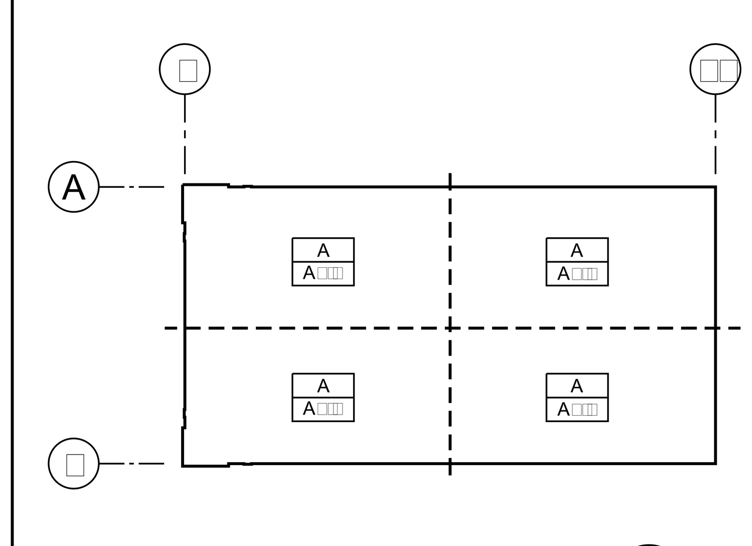

PLA

C MM RC C TR CTI C , L P
Cr rad Par a rth
Cit Indu tr , Cali rnia
Tele h ne
Licen e

RALL R PLA
ILDI A
MA TIC AD R L I TIC C T R
CTH "H" ILLA PL A T PRAIRI

Dra in Pl t ar

DRA DAT
CCC
H T
A

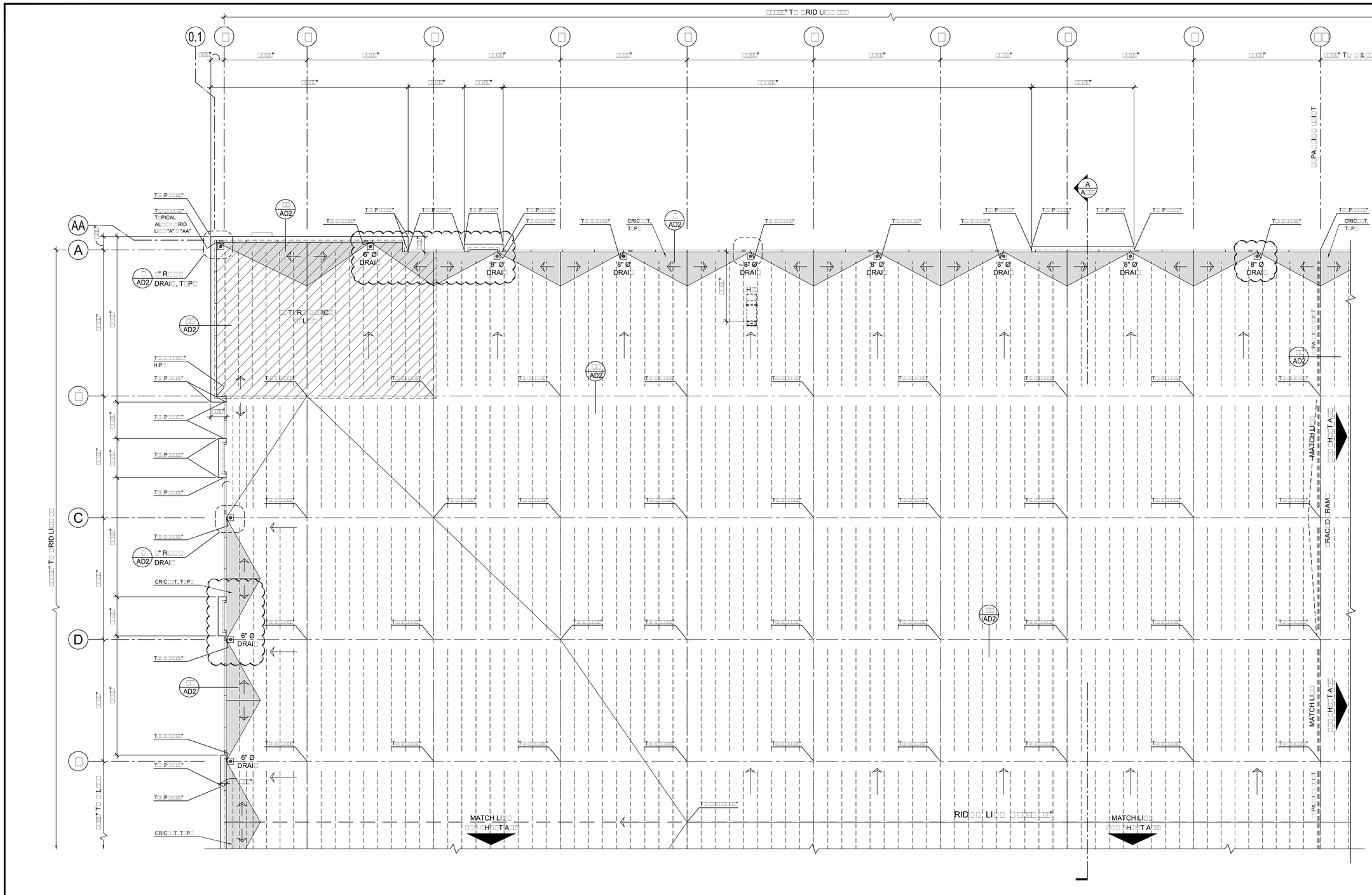

PARTIAL PLAN

A

R L D

ROOF JOIST

MAIN LINE

BRANCH LINE

EF - # ROOF EXHAUST FAN PER MECHANICAL DRAWINGS . . . . . AD

H.P. HIGH POINT
L.P. LOW POINT
R.D. ROOF DRAIN

METAL ROOF SCUTTLE: "BILCO" TYPE "NB" 30" x 54" OR EQUAL APPROVED SEE DETAIL . . . . . AD

CRICKET

T.O.P. TOP OF PARAPET

HI.P. HIGH POINT
L.P. LOW POINT
R.D. ROOF DRAIN

ROOF DRAIN AND OVERFLOW SCUPPER SEE DETAILS . . . . . AD AD

FIRE SPRINKLER HEADS

NOTES:

R

R ALL DIMENSIONS ARE TO CENTERLINE OF MEMBER

ALL DIMENSIONS ARE TO FACE OF CONCRETE

MECHANICAL DRAWINGS

R IPMENT CHEDULE

HAUSTER AND MAKEUP ACTUATORS

R	M

DIRECT GAS-FIRED HEATER : MANUFACTURER- CAMBRIDGE

R	M	T
HEATER		

ELECTRIC UNIT HEATER MAKEUP ACTUATORS

R	M	

RTU AND ELECTRICAL RACEWAY

R	M	T

PLAN

Drawing Plot Scale

DRAWN DATE

CCC

CHECK

A

This Document, Either in Drawing or Text Assembly, is the Property of Hensel Phelps Construction Co. LP ("Contractor") and is Protected by Copyright and Other Intellectual Property Rights. Contractor Retains Its Ownership Rights in the Document and Its Right to Prosecute Infringement Actions. Any Use, Reproduction, Modification, Distribution, Public Display, or Public Performance of the Document Without the Written Consent of Contractor. This Document Is Being Provided to Recipient on a Non-Exclusive, Non-Transferable, Royalty-Free Basis Solely for Recipient's Use in Connection with the Project Described in Contract Between Contractor and Owner Dated on or About June 1, 2017 (the "Project"). Recipient Shall Not Alter This Document Without the Written Consent of Contractor. This Notice Must Remain on This Document and Any Copy Or Portion Thereof Made by Recipient. Recipient Agrees to Indemnify and Hold Contractor Harmless for Any Use of This Document Not Authorized by This Notice.

Company	Hensel Phelps Construction Co. LP
Address	Corporate Park Drive
City, Industry, California	
Telephone	
License	

PARTIAL PLAN

BUILDING A

MAIN TIC ADDITIONS & ALTERATIONS

CTH "H" BILLA PLACENTIA, CA

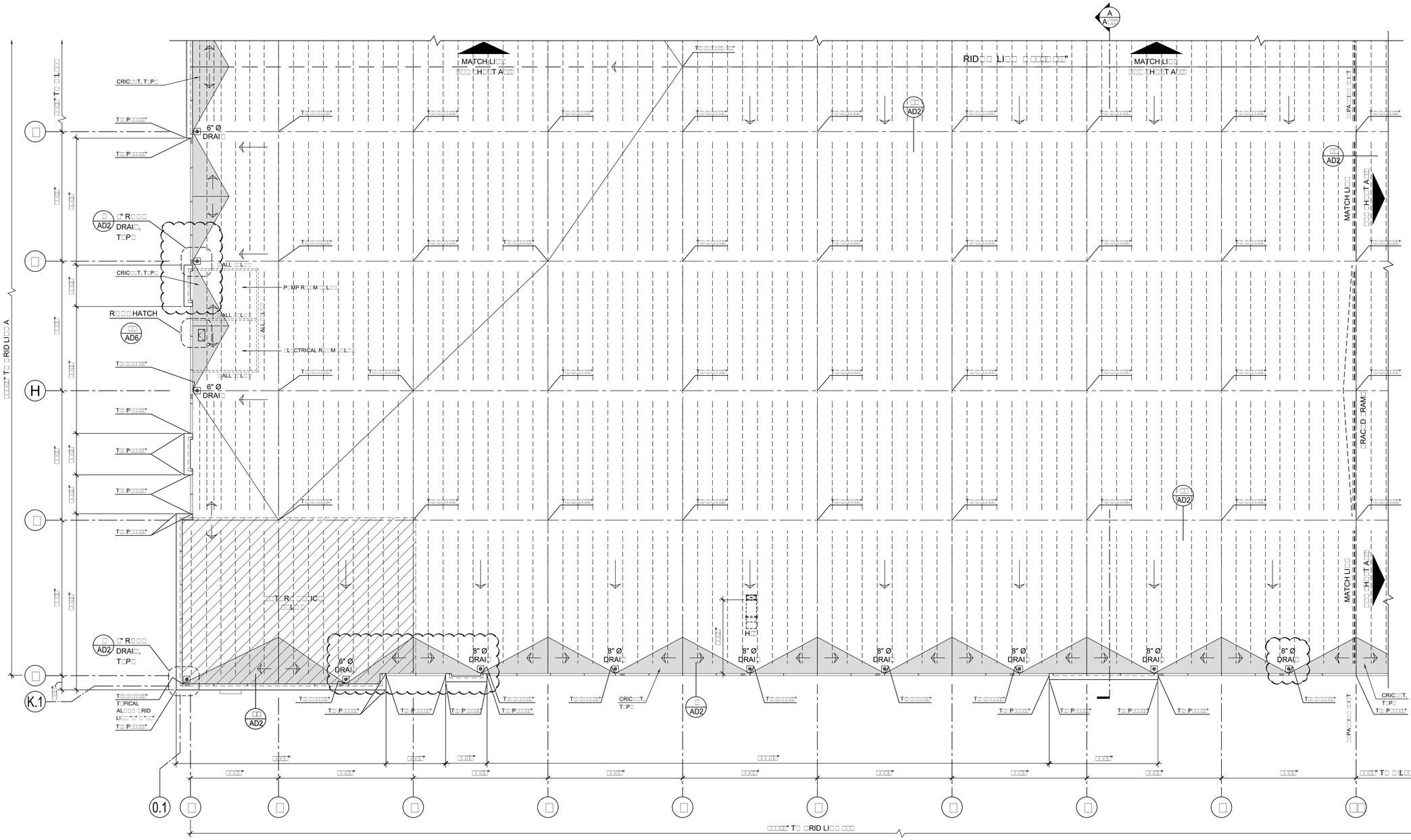

PARTIAL LAR D R PLA

CAL

A

R L D

- ROOF JOIST
- MAIN LINE
- BRANCH LINE
- EF - # ROOF EXHAUST FAN PER MECHANICAL DRAWINGS . . . . . AD AD
- H ATI A D TILATI IT THR H AD M CH D A D TAIL AD
- METAL ROOF SCUTTLE: "BILCO" TYPE "NB" 30" x 54" OR EQUAL APPROVED SEE DETAIL . . . . . AD
- CRIC T
- T P T T DIR CTL A H DIR T L R L M R R M R I T P PARAP T
- HI H P T
- L P T
- R D R DRAI
- R L P P R T , MI IM R L P I T P R T
- ROOF DRAIN AND OVERFLOW SCUPPER SEE DETAILS . . . . . AD AD
- FIRE SPRINKLER HEADS

NOTES:

TR CT RAL DRA I R R L ATI

R L P

MI IM R L P I T P R T

R I T

R

MIL ADH R D PDM M RA

R T

ALL DIM I A D R C DITI HALL RI D TH IT A D ITH TH MCHA ICAL C TRACT R PRI R T C TR CTI R P I

RI I ALL IT C TRACT R LCAT T CL AR PRI L R H AD R P I

R IPM T CH D L R

R IPMENT SCHEDULE

HAT A MA ACT R R

R R C C	M D L

DIRECT GAS-FIRED HEATER : MANUFACTURER- CAMBRIDGE

R R C C	M D L	T L
H THR H		

LCTRIC IT HAT R MA ACT R R

R R C C	M D L	

RT A LCTRIC RA D

R R C C	M D L	T L

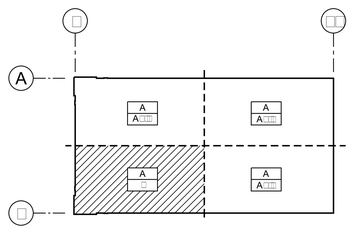

PLA

This Document, Either in Drawing or Text Assembling Is Property of Cambridge Mechanical Construction Co. L.P. ("Consultant") and Is Protected by Copyright and Other Intellectual Rights. Such Rights Include Without Limitation Rights Under Applicable Laws Of Canada, Its Provinces and Territories, U.S.A. and Other Countries. This Document Or Any Part Thereof May Not Be Reproduced Or Used Without the Written Consent of Consultant. This Document Is Not Intended for Use Other Than in Connection with the Project Described Herein. Any Use Of This Document Other Than Pursuant to a Valid Contract Is Prohibited. Consultant Does Not Warrant Or Represent That This Document Is Free of Any Defect, Error or Omission. Consultant Is Not Responsible for Any Loss Or Damage Arising Out of Or Resulting from Any Use Of This Document Other Than Pursuant to a Valid Contract.

		DAT
		R
		DAT
		R

C MMERC C TR CTI C LP
Cr rad Par a rth
h
Cit Indu tr Cali mia
Tele hone
Licen

PARTIAL LAR D R PLA

ILDI A

MA TIC AD R L I TIC C T R

CTH "H" ILLA PLA A T PRAIRI I

Dra in Pl ar

DRA DAT

D

CCC

H T

A

A Architectural M LC 3d A Architectural A d

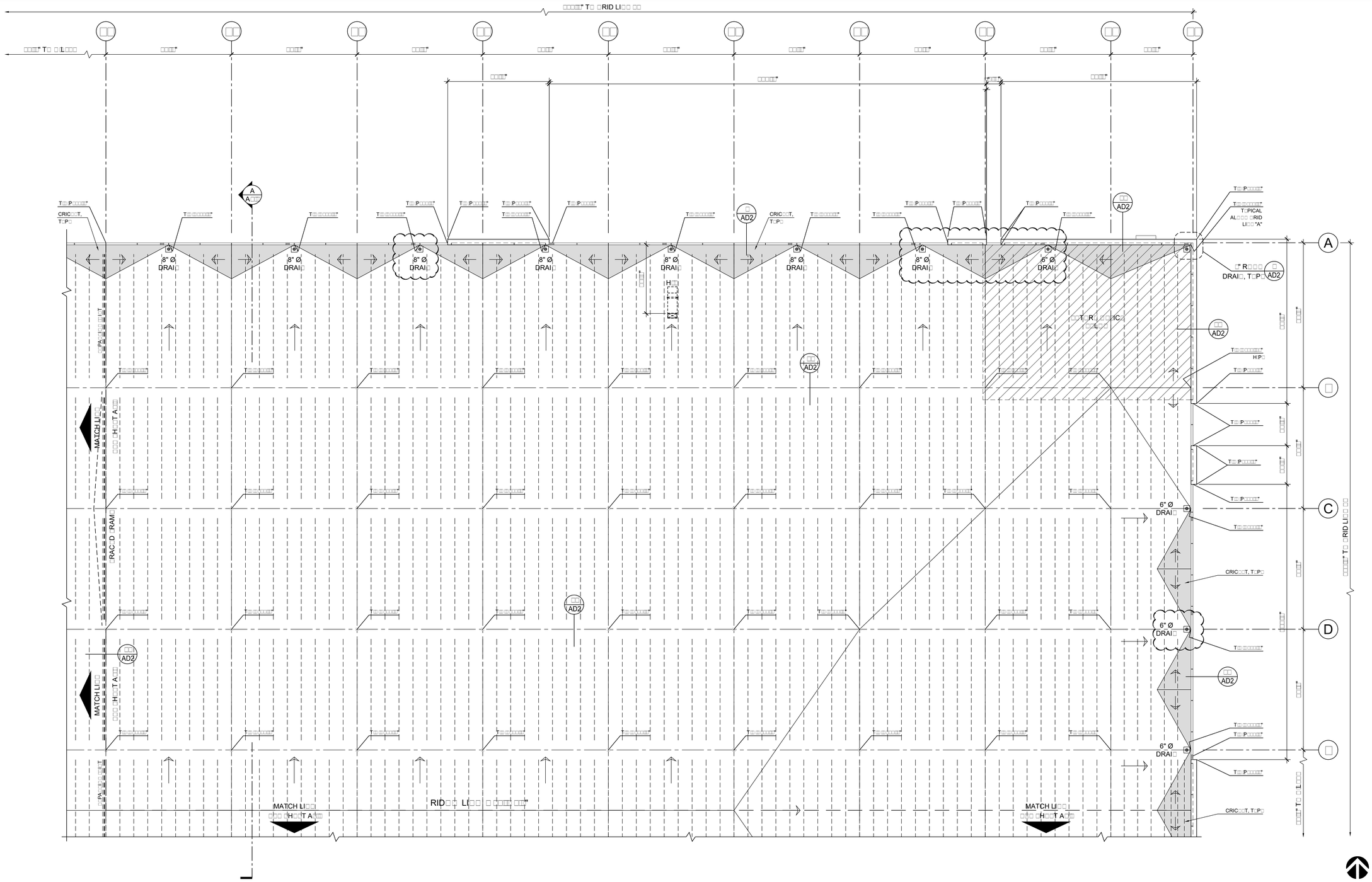

PARTIAL LAR D R PLA

CAL

A

R L D

- ROOF JOIST
- MAIN LINE
- BRANCH LINE
- EF - # ROOF EXHAUST FAN PER MECHANICAL DRAWINGS AD2
- H ATI A D TILATI IT M CH D DTAIL AD2
- METAL ROOF SCUTTLE: "BILCO" TYPE "NB" 30" x 54" OR EQUAL APPROVED SEE DETAIL AD2
- CRIC T
- T P R R DIR CTL A H H T R L R M R M R T R M R TR CT RAL DRA I
- T P PARAP T
- H P HI H P T
- L P L P T
- R D R DRAI
- R L P " P R T , MI TR CT RAL DRA I R R ATI
- ROOF DRAIN AND OVERFLOW SCUPPER SEE DETAILS AD2
- FIRE SPRINKLER HEADS

NOTES:

TR CT RAL DRA I R R L ATI

R L P

MI IM M R L P I " P R T

R I T

R

" M TAL D C

" RI ID I LATI R

MIL ADH R D PDM M M RA

R T

ALL DIM I D A D R C DITI HALL

RI D D TH D IT A D ITH TH

M CHA ICAL C TRACT R PRI R T

C TR CTI R P

ALL IT C C TRACT R

L CAT T CL AR PRI L R H AD R

P

R IPM T CH D L R HT

R IPM T CH D L

HA T A MA ACT R R

R R C	M D L

DIRECT GAS-FIRED HEATER : MANUFACTURER- CAMBRIDGE

R R C	M D L	T L
H THR H		

CTRIC IT H AT R MA ACT R R

R R C	M D L	

RT A L CTRIC RA D

R R C	M D L	T L

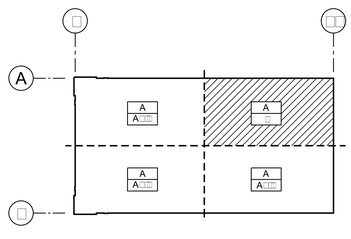

PLA

This Document, Either in Drawing or Text Assembly, is Property of Kaiser Permanente Construction Co. L.P. ("Contractor") and Contains Confidential Information. Reproduction, in whole or in part, in any form or medium, without the written consent of Contractor, is prohibited. Any ideas, designs, or concepts contained herein may be used only in connection with the project for which it is intended. Title to, and ownership of, the "plans" and/or "specifications" (as defined in the Standard Form of Agreement between Owner and Architect) and all copies thereof, shall remain in Contractor. The "plans" and/or "specifications" are to be returned to Contractor upon request.

		DAT
		R
		DAT
		R

C MMI RC: C TR: CTI C LP
Cr rad Par a rth
h
Cit Indu tr., Cali mia
Tele h ne
Licen b

PARTIAL LAR D R PLA

ILDI A

MA TIC AD R L I TIC C T R

CTH "H" ILLA PL:A:A:T PRAIRI I

Dra in Pl l ar

DRA DAT

D

CCC

H T

A

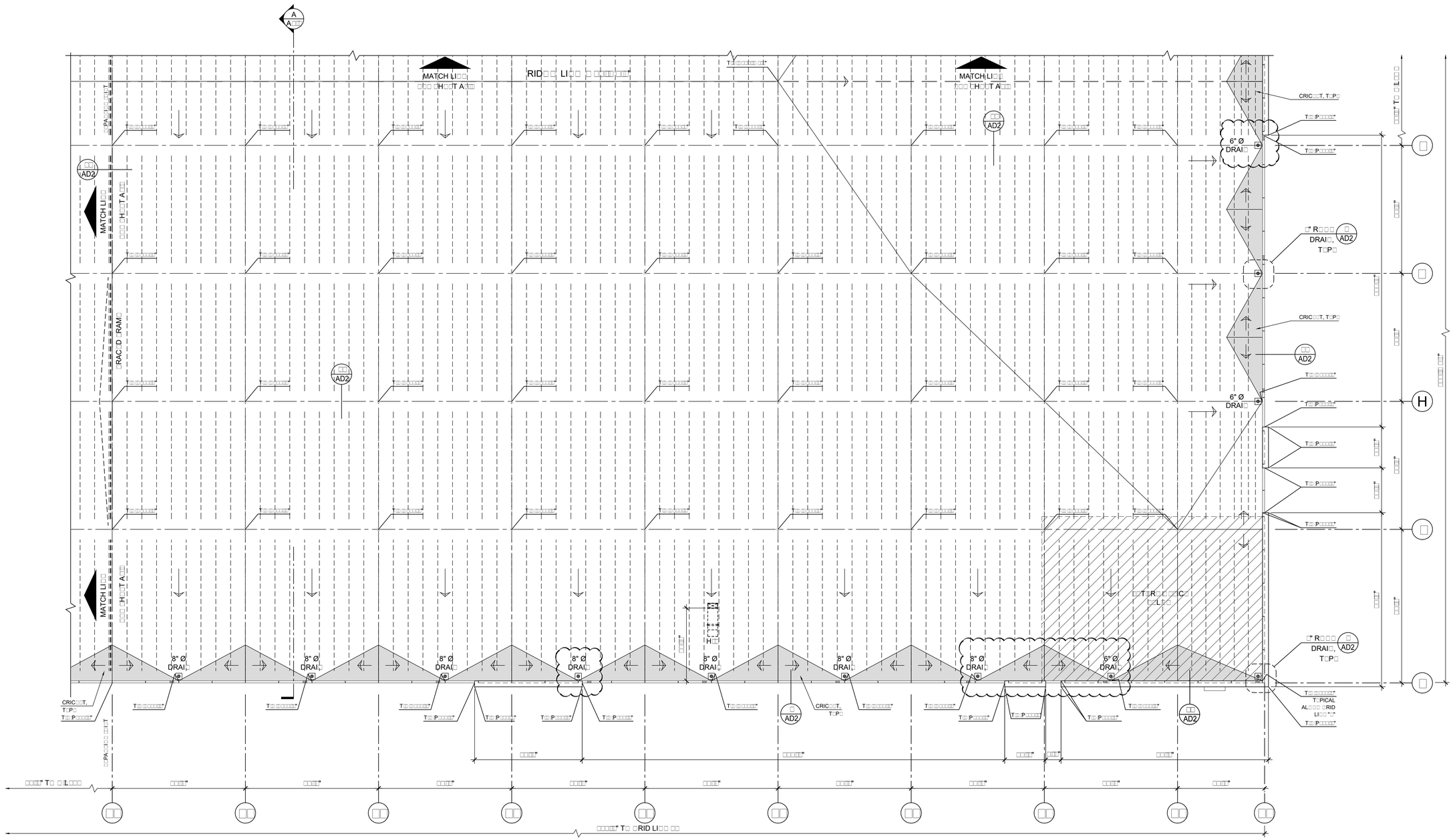

PARTIAL LAR D R PLA

CAL

A

R L D

- ROOF JOIST
- MAIN LINE
- BRANCH LINE
- EF - # ROOF EXHAUST FAN PER MECHANICAL DRAWINGS . . . . . AD AD
- H THR H ATI A D TILATI IT M CH D D A D D TAIL AD
- METAL ROOF SCUTTLE: "BILCO" TYPE "NB" 30" x 54" OR EQUAL APPROVED SEE DETAIL . . . . . AD
- CRIC T
- T P T L DIR CTL A CH DIR T L R L L R M R I PA T RAL DRA I
- T P PARAP T
- HIP HIP T
- LIP L P T
- RID R DRAI
- R L P P T , MI M TR CT RAL DRA I R R L ATI
- ROOF DRAIN AND OVERFLOW SCUPPER SEE DETAILS . . . . . AD AD
- FIRE SPRINKLER HEADS

NOTES:

TR CT RAL DRA I R R L ATI

R L P

MI IM M R L P I P T R T

R I T

R HA T A MA ACT R R

- ALL DIM I A D R C DITI HALL RI D TH D IT A D ITH TH M CHA ICAL C TRACT R PRI R T C TR CTI R ALL IT C C TRACT R L CAT T CL AR PRI L R HAD R P I

R IPM T CH D L R

R IPM T CH D L

HA T A MA ACT R R

R R C C	M D L

DIRECT GAS-FIRED HEATER : MANUFACTURER- CAMBRIDGE

R R C C	M D L	T L
H THR H		

CTRIC IT H ATER MA ACT R R

R R C C	M D L	

RT A L CTRIC RA D

R R C C	M D L	T L

PLA

DRA DAT

CCC

H T

A

C MM RC C TR CT C LP
Cr rad Par a rth
h
Cit Indu tr Cali mia
Tele h ne
Licen

PARTIAL LAR D R PLA
ILDI A
MA TIC AD R L I TIC C T R
CTH "H" ILLA PL A T PRAIRI I

Dra in Pl t ar

DAT

R

DAT

R L L

A Architectural M LC Id A Architectural A d

D□□R □CH□D□L□

R□□□	D□□R	□I□□ □ □	H□	T□	T□P□	MATL□	□ACI□□	□I□I□H I□	□I□I□H □□T	□RAM□ MATL□	□RAM□ □I□I□H	D□TAIL□ H□AD	D□TAIL□ □AM□	D□TAIL□ THR□□H	□IR□ RATI□□ □D□□R □ □RAM□□	HARD□ AR□ L□C□	HARD□ AR□ CL□□□R□	R□MAR□□ □□ □□□ D□□R □□T□□
	□□□	PR □□□"	□□□"	□ □□□"	A	AL□□L	□	□□	□□	AL	□□	13/AD1	10/AD1	14/AD1			●	□□□ D□□R □□T□ □□
	□□□	□□□"	□□□"	□ □□□"	□	HM	□	P	P	HM	P	12A/AD1	12A/AD1	12B/AD1			●	□□□ D□□R □□T□ □□
	□□□	□□□"	□□□"	□ □□□"	□	HM	□	P	P	HM	P	12A/AD1	12A/AD1	12B/AD1			●	□□□ D□□R □□T□ □□
	□□□	□□□□"	□□□□"	□	C	M□T	□	□	P	M□T	P	16/AD1	18/AD1	15/AD1				
	□□□	□□□"	□□□□"	□	C	M□T	□	□	P	M□T	P	16/AD1	18/AD1	15/AD1				
	□□□	□□□"	□□□□"	□	C	M□T	□	□	P	M□T	P	16/AD1	18/AD1	15/AD1				
	□□□	□□□"	□□□□"	□	C	M□T	□	□	P	M□T	P	16/AD1	18/AD1	15/AD1				
	□□□	□□□"	□□□□"	□	C	M□T	□	□	P	M□T	P	16/AD1	18/AD1	15/AD1				
	□□□	□□□"	□□□"	□ □□□"	□	HM	□	P	P	HM	P	12A/AD1	12A/AD1	12B/AD1			●	□□□ D□□R □□T□ □□
	□□□	□□□"	□□□□"	□	C	M□T	□	□	P	M□T	P	16/AD1	18/AD1	15/AD1				
	□□□	□□□"	□□□□"	□	C	M□T	□	□	P	M□T	P	16/AD1	18/AD1	15/AD1				
	□□□	□□□"	□□□□"	□	C	M□T	□	□	P	M□T	P	16/AD1	18/AD1	15/AD1				
	□□□	□□□"	□□□□"	□	C	M□T	□	□	P	M□T	P	16/AD1	18/AD1	15/AD1				
	□□□	□□□"	□□□□"	□	C	M□T	□	□	P	M□T	P	16/AD1	18/AD1	15/AD1				
	□□□	□□□"	□□□□"	□	C	M□T	□	□	P	M□T	P	16/AD1	18/AD1	15/AD1				
	□□□	□□□"	□□□□"	□	C	M□T	□	□	P	M□T	P	16/AD1	18/AD1	15/AD1				
	□□□	□□□"	□□□"	□ □□□"	□	HM	□	P	P	HM	P	12A/AD1	12A/AD1	12B/AD1			●	□□□ D□□R □□T□ □□
	□□□	□□□"	□□□□"	□	C	M□T	□	□	P	M□T	P	16/AD1	18/AD1	15/AD1				
	□□□	□□□"	□□□□"	□	C	M□T	□	□	P	M□T	P	16/AD1	18/AD1	15/AD1				
	□□□	□□□"	□□□□"	□	C	M□T	□	□	P	M□T	P	16/AD1	18/AD1	15/AD1				
	□□□	□□□"	□□□□"	□	C	M□T	□	□	P	M□T	P	16/AD1	18/AD1	15/AD1				
	□□□	□□□"	□□□□"	□	C	M□T	□	□	P	M□T	P	16/AD1	18/AD1	15/AD1				
	□□□	□□□"	□□□□"	□	C	M□T	□	□	P	M□T	P	16/AD1	18/AD1	15/AD1				
	□□□	□□□"	□□□□"	□	C	M□T	□	□	P	M□T	P	16/AD1	18/AD1	15/AD1				
	□□□	□□□"	□□□"	□ □□□"	□	HM	□	P	P	HM	P	12A/AD1	12A/AD1	12B/AD1			●	□□□ D□□R □□T□ □□
	□□□	□□□"	□□□□"	□	C	M□T	□	□	P	M□T	P	16/AD1	18/AD1	15/AD1				
	□□□	□□□"	□□□□"	□	C	M□T	□	□	P	M□T	P	16/AD1	18/AD1	15/AD1				
	□□□	□□□"	□□□□"	□	C	M□T	□	□	P	M□T	P	16/AD1	18/AD1	15/AD1				
	□□□	□□□"	□□□□"	□	C	M□T	□	□	P	M□T	P	16/AD1	18/AD1	15/AD1				
	□□□	□□□"	□□□□"	□	C	M□T	□	□	P	M□T	P	16/AD1	18/AD1	15/AD1				
	□□□	□□□"	□□□□"	□	C	M□T	□	□	P	M□T	P	16/AD1	18/AD1	15/AD1				
	□□□	□□□"	□□□□"	□	C	M□T	□	□	P	M□T	P	16/AD1	18/AD1	15/AD1				
	□□□	□□□"	□□□"	□ □□□"	□	HM	□	P	P	HM	P	12A/AD1	12A/AD1	12B/AD1			●	□□□ D□□R □□T□ □□
	□□□	□□□"	□□□□"	□	C	M□T	□	□	P	M□T	P	16/AD1	18/AD1	15/AD1				
	□□□	□□□"	□□□□"	□	C	M□T	□	□	P	M□T	P	16/AD1	18/AD1	15/AD1				
	□□□	□□□"	□□□□"	□	C	M□T	□	□	P	M□T	P	16/AD1	18/AD1	15/AD1				
	□□□	□□□"	□□□□"	□	C	M□T	□	□	P	M□T	P	16/AD1	18/AD1	15/AD1				
	□□□	□□□"	□□□□"	□	C	M□T	□	□	P	M□T	P	16/AD1	18/AD1	15/AD1				
	□□□	□□□"	□□□□"	□	C	M□T	□	□	P	M□T	P	16/AD1	18/AD1	15/AD1				
	□□□	□□□"	□□□□"	□	C	M□T	□	□	P	M□T	P	16/AD1	18/AD1	15/AD1				
	□□□	□□□"	□□□"	□ □□□"	□	HM	□	P	P	HM	P	12A/AD1	12A/AD1	12B/AD1			●	□□□ D□□R □□T□ □□
	□□□	□□□"	□□□□"	□	C	M□T	□	□	P	M□T	P	16/AD1	18/AD1	15/AD1				
	□□□	□□□"	□□□□"	□	C	M□T	□	□	P	M□T	P	16/AD1	18/AD1	15/AD1				
	□□□	□□□"	□□□□"	□	C	M□T	□	□	P	M□T	P	16/AD1	18/AD1	15/AD1				
	□□□	□□□"	□□□□"	□	C	M□T	□	□	P	M□T	P	16/AD1	18/AD1	15/AD1				
	□□□	□□□"	□□□□"	□	C	M□T	□	□	P	M□T	P	16/AD1	18/AD1	15/AD1				
	□□□	□□□"	□□□□"	□	C	M□T	□	□	P	M□T	P	16/AD1	18/AD1	15/AD1				
	□□□	□□□□"	□□□□"	□	C	M□T	□	□	P	M□T	P	16/AD1	18/AD1	15/AD1				
	□□□	□□□"	□□□"	□ □□□"	□	HM	□	P	P	HM	P	12A/AD1	12A/AD1	12B/AD1			●	□□□ D□□R □□T□ □□
	□□□	PR □□□"	□□□"	□ □□□"	A	AL□□L	□	□□	□□	AL	□□	13/AD1	10/AD1	14/AD1			●	□□□ D□□R □□T□ □□
	□□□	□□□"	□□□"	□ □□□"	□	HM	□	P	P	HM	P	12A/AD1	12A/AD1	12B/AD1			●	□□□ D□□R □□T□ □□
	□□□	□□□"	□□□"	□ □□□"	□	HM	□	P	P	HM	P	12A/AD1	12A/AD1	12B/AD1			●	□□□ D□□R □□T□ □□
	□□□	□□□"	□□□"	□ □□□"	□	HM	□	P	P	HM	P	12A/AD1	12A/AD1	12B/AD1			●	□□□ D□□R □□T□ □□
	□□□	□□□"	□□□"	□ □□□"	□	HM	□	P	P	HM	P	12A/AD1	12A/AD1	12B/AD1			●	□□□ D□□R □□T□ □□

D□□R □CH□D□L□

R□□□	D□□R	□I□□ □ □	H□	T□	T□P□	MATL□	□ACI□□	□I□I□H I□	□I□I□H □□T	□RAM□ MATL□	□RAM□ □I□I□H	D□TAIL□ H□AD	D□TAIL□ □AM□	D□TAIL□ THR□□H	□IR□ RATI□□ □D□□R □ □RAM□□	HARD□ AR□ L□C□	HARD□ AR□ CL□□□R□	R□MAR□□ □□ □□□ D□□R □□T□□
	□□□	PR □□□"	□□□"	□ □□□"	A	AL□□L	□	□□	□□	AL	□□	13/AD1	10/AD1	14/AD1			●	□□□ D□□R □□T□ □□
	□□□	□□□"	□□□"	□ □□□"	□	HM	□	P	P	HM	P	12A/AD1	12A/AD1	12B/AD1			●	□□□ D□□R □□T□ □□
	□□□	□□□□"	□□□□"	□	C	M□T	□	□	P	M□T	P	16/AD1	18/AD1	15/AD1				
	□□□	□□□"	□□□□"	□	C	M□T	□	□	P	M□T	P	16/AD1	18/AD1	15/AD1				
	□□□	□□□"	□□□□"	□	C	M□T	□	□	P	M□T	P	16/AD1	18/AD1	15/AD1				
	□□□	□□□"	□□□□"	□	C	M□T	□	□	P	M□T	P	16/AD1	18/AD1	15/AD1				
	□□□	□□□"	□□□□"	□	C	M□T	□	□	P	M□T	P	16/AD1	18/AD1	15/AD1				
	□□□	□□□"	□□□□"	□	C	M□T	□	□	P	M□T	P	16/AD1	18/AD1	15/AD1				
	□□□	□□□"	□□□□"	□	C	M□T	□	□	P	M□T	P	16/AD1	18/AD1	15/AD1				
	□□□	□□□"	□□□"	□ □□□"	□	HM	□	P	P	HM	P	12A/AD1	12A/AD1	12B/AD1			●	□□□ D□□R □□T□ □□
	□□□	□□□"	□□□□"	□	C	M□T	□	□	P	M□T	P	16/AD1	18/AD1	15/AD1				
	□□□	□□□"	□□□□"	□	C	M□T	□	□	P	M□T	P	16/AD1	18/AD1	15/AD1				
	□□□	□□□"	□□□□"	□	C	M□T	□	□	P	M□T	P	16/AD1	18/AD1	15/AD1				
	□□□	□□□"	□□□□"	□	C	M□T	□	□	P	M□T	P	16/AD1	18/AD1	15/AD1				
	□□□	□□□"	□□□□"	□	C	M□T	□	□	P	M□T	P	16/AD1	18/AD1	15/AD1				
	□□□	□□□"	□□□□"	□	C	M□T	□	□	P	M□T	P	16/AD1	18/AD1	15/AD1				
	□□□	□□□"	□□□□"	□	C	M□T	□	□	P	M□T	P	16/AD1	18/AD1	15/AD1				
	□□□	□□□"	□□□"	□ □□□"	□	HM	□	P	P	HM	P	12A/AD1	12A/AD1	12B/AD1			●	□□□ D□□R □□T□ □□
	□□□	□□□"	□□□□"	□	C	M□T	□	□	P	M□T	P	16/AD1	18/AD1	15/AD1				
	□□□	□□□"	□□□□"	□	C	M□T	□	□	P	M□T	P	16/AD1	18/AD1	15/AD1				
	□□□	□□□"	□□□□"	□	C	M□T	□	□	P	M□T	P	16/AD1	18/AD1	15/AD1				
	□□□	□□□"	□□□□"	□	C	M□T	□	□	P	M□T	P	16/AD1	18/AD1	15/AD1				
	□□□	□□□"	□□□□"	□	C	M□T	□	□	P	M□T	P	16/AD1	18/AD1	15/AD1				
	□□□	□□□"	□□□□"	□	C	M□T	□	□	P	M□T	P	16/AD1	18/AD1	15/AD1				
	□□□	□□□"	□□□□"	□	C	M□T	□	□	P	M□T	P	16/AD1	18/AD1	15/AD1				
	□□□	□□□"	□□□"	□ □□□"	□	HM	□	P	P	HM	P	12A/AD1	12A/AD1	12B/AD1			●	□□□ D□□R □□T□ □□
	□□□	□□□"	□□□□"	□	C	M□T	□	□	P	M□T	P	16/AD1	18/AD1	15/AD1				
	□□□	□□□"	□□□□"	□	C	M□T	□	□	P	M□T	P	16/AD1	18/AD1	15/AD1				
	□□□	□□□"	□□□□"	□	C	M□T	□	□	P	M□T	P	16/AD1	18/AD1	15/AD1				
	□□□	□□□"	□□□□"	□	C	M□T	□	□	P	M□T	P	16/AD1	18/AD1	15/AD1				
	□□□	□□□"	□□□□"	□	C	M□T	□	□	P	M□T	P	16/AD1	18/AD1	15/AD1				
	□□□	□□□"	□□□□"	□	C	M□T	□	□	P	M□T	P	16/AD1	18/AD1	15/AD1				
	□□□	□□□"	□□□□"	□	C	M□T	□	□	P	M□T	P	16/AD1	18/AD1	15/AD1				
	□□□	□□□"	□□□"	□ □□□"	□	HM	□	P	P	HM	P	12A/AD1	12A/AD1	12B/AD1			●	□□□ D□□R □□T□ □□
	□□□	□□□"	□□□□"	□	C	M□T	□	□	P	M□T	P	16/AD1	18/AD1	15/AD1				
	□□□	□□□"	□□□□"	□	C	M□T	□	□	P	M□T	P	16/AD1	18/AD1	15/AD1				
	□□□	□□□"	□□□□"	□	C	M□T	□	□	P	M□T	P	16/AD1	18/AD1	15/AD1				
	□□□	□□□"	□□□□"	□	C	M□T	□	□	P	M□T	P	16/AD1	18/AD1	15/AD1				
	□□□	□□□"	□□□□"	□	C	M□T	□	□	P	M□T	P	16/AD1	18/AD1	15/AD1				
	□□□	□□□"	□□□□"	□	C	M□T	□	□	P	M□T	P	16/AD1	18/AD1	15/AD1				
	□□□	□□□"	□□□□"	□	C	M□T	□	□	P	M□T	P	16/AD1	18/AD1	15/AD1				
	□□□	□□□"	□□□"	□ □□□"	□	HM	□	P	P	HM	P	12A/AD1	12A/AD1	12B/AD1			●	□□□ D□□R □□T□ □□
	□□□	□□□"	□□□□"	□	C	M□T	□	□	P	M□T	P	16/AD1	18/AD1	15/AD1				
	□□□	□□□"	□□□□"	□	C	M□T	□	□	P	M□T	P	16/AD1	18/AD1	15/AD1				
	□□□	□□□"	□□□□"	□	C	M□T	□	□	P	M□T	P	16/AD1	18/AD1	15/AD1				
	□□□	□□□"	□□□□"	□	C	M□T	□	□	P	M□T	P	16/AD1	18/AD1	15/AD1				
	□□□	□□□□"	□□□□"	□	C	M□T	□	□	P	M□T	P	16/AD1	18/AD1	15/AD1				
	□□□	□□□"	□□□"	□ □□□"	□	HM	□	P	P	HM	P	12A/AD1	12A/AD1	12B/AD1			●	□□□ D□□R □□T□ □□
	□□□	□□□"	□□□"	□ □□□"	□	HM	□	P	P	HM	P	12A/AD1	12A/AD1	12B/AD1			●	□□□ D□□R □□T□ □□
	□□□	PR □□□"	□□□"	□ □□□"	A	AL□□L	□	□□	□□	AL	□□	13/AD1	10/AD1	14/AD1			●	□□□ D□□R □□T□ □□
	□□□	□□□"	□□□"	□ □□□"	□	HM	□	P	P	HM	P	12A/AD1	12A/AD1	12B/AD1			●	□□□ D□□R □□T□ □□
	□□□	□□□"	□□□"	□ □□□"	□	HM	□	P	P	HM	P	12A/AD1	12A/AD1	12B/AD1			●	□□□ D□□R □□T□ □□
	□□□	□□□"	□□□"	□ □□□"	□	HM	□	P	P	HM	P	12A/AD1	12A/AD1	12B/AD1			●	□□□ D□□R □□T□ □□
	□□□	□□□"	□□□"	□ □□□"	□	HM	□	P	P	HM	P	12A/AD1	12A/AD1	12B/AD1			●	□□□ D□□R □□T□ □□
	□□□	□□□"	□□□"	□ □□□"	□	HM	□	P	P	HM	P	12A/AD1	12A/AD1	12B/AD1			●	□□□ D□□R □□T□ □□
	□□□	□□□"	□□□"	□ □□□"	□	HM	□	P	P	HM	P	12A/AD1	12A/AD1	12B/AD1			●	□□□ D□□R □□T□ □□
	□□□A	PR□□□□"	□□□"	□"	D	HM	□	R□	R□	HM	P	1/AD6	2/AD6	-			●	□□□ D□□R □□T□ □□
	□□□A	PR□□□□"	□□□"	□"	D	HM	□	R□	R□	HM	P	1/AD6	2/AD6	-		●	●	

D□□R T□P□□

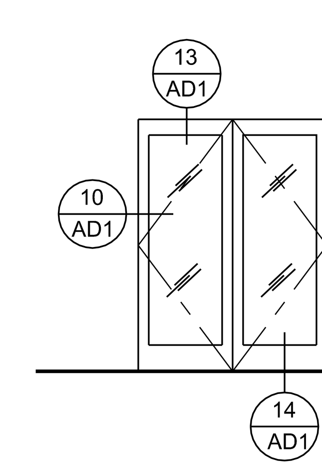

A AL□M□□ □LA□□ M□DI□M □TIL□ D□□R

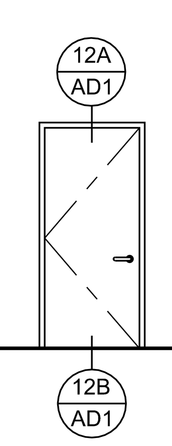

□ H□LL□□ M□TAL D□□R

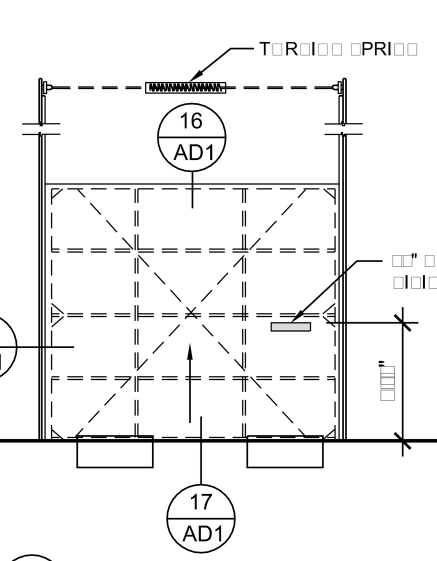

C □I□□L□ □□CTI□□ □□RTICAL LI□T T□R□I□□ □PRI□□ D□□R

□□T□□
□□PR□□ID□ □ □ATH□R □□AL□ AT □AM□□ A□D □ILL
□□ALL □□RTICAL LI□T D□□R C□M□ □ ITH I□□□LAT□D□
□□P□L□□T□R□□□ PR□□IDI□□ I□□□LATI□□ □ACT□R□ □□ □□□□R□□AL□□

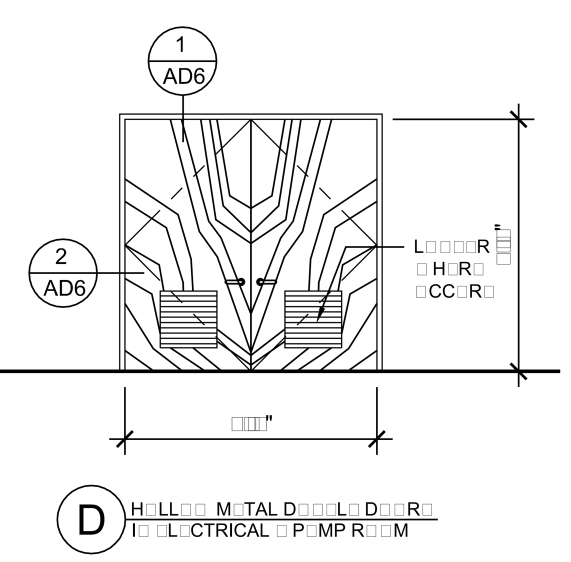

D H□LL□□ M□TAL D□□□L□ D□□R□ I□ □L□CTRICAL □ P□MP R□□M

WINDOW TYPE:

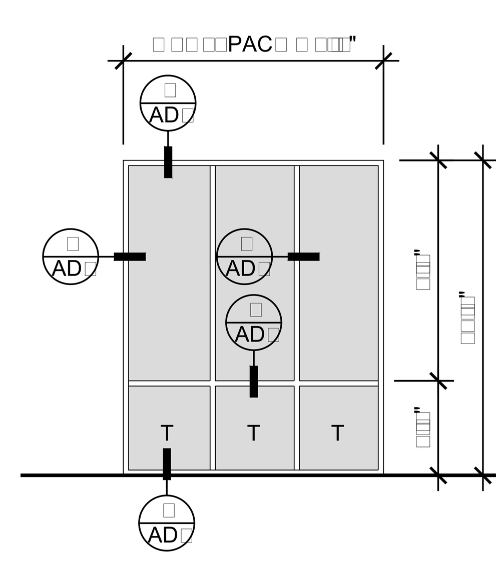

□T□R□□R□□T □ I□D□□
□ □AL□M□□RAM□
□ □

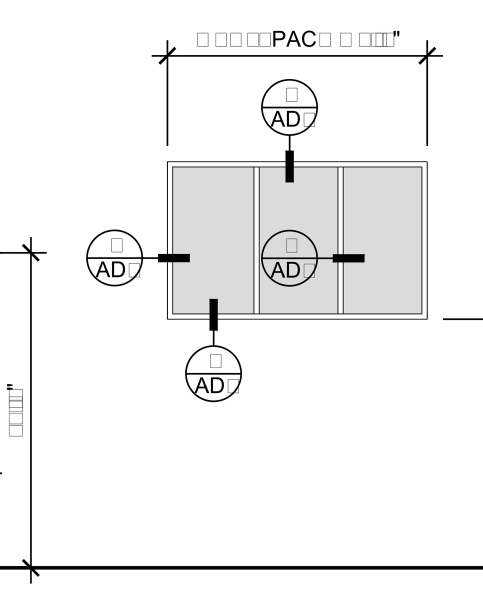

□T□R□□R□□T □ I□D□□
□ □AL□M□□RAM□
□ M□□□A□I□□ L□□□L
□ □

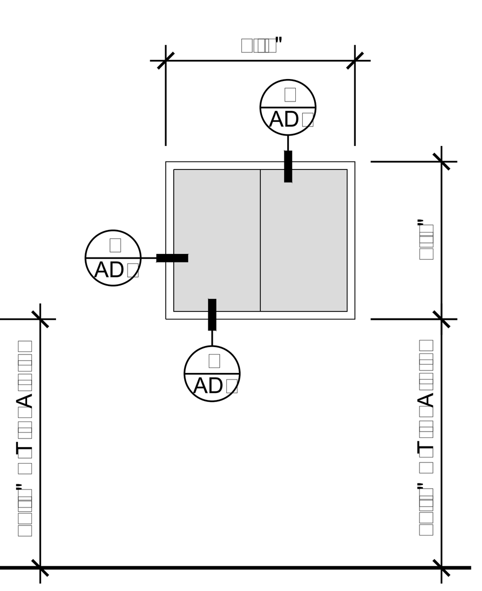

CL□AR□T□R□ □ I□D□□
□ □AL□M□□RAM□
□ □

D□□R □□T□□

□□ □□□ □L□□R PLA□ □H□□T A□□ □□R □□IT □I□□□ □□T□D□

□□ □□IT D□□R□ □HALL □□ □P□□A□L□ □R□M TH□ I□□ID□, □ ITH□□T □□□ □□A □□□ □R A□□ □P□CIAL □□□□ L□D□□ □R □□□□RT□

□□ □ IDTH A□D H□I□HT □□R□□□IR□D □□IT D□□R□ A□□ T□ C□MPL□ □ ITH L□CAL □□ILDI□□ C□D□□

□□ □IR□ ACC□□□ D□□R□ □□T□D □□A□□HALL □□ □□□IPP□D □ □L□C□I□□ HARD□ AR□□D□□□L□ □□□□D D□AD□□LT□

□□ ALL □□T□RI□R MA□ D□□R□ T□ HA□□ □ □ATH□R □□AL□ A□D □□TT□M □□ □□P□□

□□ □□R HARD□ AR□ □□T, □□□ □P□CI□ICATI□□□□

□□ □□RTICAL LI□T □□□RH□AD D□□R□ □ H□LL□□ M□TAL□ A□D □RAM□□ □HALL R□C□I□□ T□ □ □□□C□AT□ □□ □□AM□L□

□□ PR□□ID□ PA□IC HARD□ AR□

□□ □□R ALT□R□AT□ H□M□D□□R □ AL□M□□T□R□□R□□T D□□R THR□□H□LD D□TAIL□, □□□ D□TAIL□□□AD□□

A□□R□□IATI□□□

AL	AL□MI□□M
□□	□ACT□R□ □I□I□H
□L	□LA□□
HC	H□LL□□ C□R□
HM	H□LL□□ M□TAL
M□T	M□TAL
P	PAI□T T□ MATCH AD□AC□□T □□R□AC□
□C	□□LID C□R□
R□	R□D □A□ □PLAI□ □LIC□D□

This Document, Either as Drawing or the Assemblage of Electronic Data, is the Property of Commerce Construction Co., L.P. ("Commerce") Thi□ d□c□ent, includin□ all electr□nic data attached therein, □a□n□t □e re□r□duced, di□tri□uted, □□dited, u□ed □r i□□le□ented in an□□a□ in □h□le □r in □art, without the written consent of Commerce. This document □hall n□t □e ta□en a□□urtenant t□, a□□ciated □ith, □r a□a re□lace□ent □r the □□□ial□ealed d□cu□ent, and i□ without warranty of any kind either expressed or implied. An□□er□□n □r □r□ani□ati□n □ a□in□ u□e □□□r rel□in□ u□□n thi□ d□cu□ent i□re□□□n□i□le □□r c□n□ir□in□ it□ accurac□ and completeness. Commerce is not responsible for edited □r re□r□duced □er□i□n□ □□ di□ital data □□□ thi□ document. The acceptance or use of this document will □e c□n□trued a□ an acce□tance □□ the □re□□in□.

R□□I□I□□□	DAT□	□□
R□□I□I□□□	DAT□	□□

C□MM□RC□ C□□□TR□CTI□□ C□,LP□
□□□□□ Cr□□r□ad□Par□□a□□□rth
□i□th □l□□r
Cit□ □□Indu□tr□, Cali□□rnia □□□□□□□□□□□
Tele□h□ne□□□□□□□□□□□□
Licen□e □□□□□□□□□□

D□□R T□P□□ A□D □CH□D□L□□

□□ILDI□□ A
MA□□□TIC □AD□□R L□□I□TIC□ C□□T□R
CTH "H" □ILLA□□ □□ PL□A□A□T PRAIRI□, □ I

Dra□in□ Pl□t □ar
□" □"
□□e thi□ □l□t □ar t□ c□n□ir□ dra□in□ ha□ n□t □een reduced □r enlar□ed □r□□ □ri□inal□ I□ thi□ □l□t □ar i□ n□t e□actl□ □ inch l□n□ the □h□□ical □i□e □□dra□in□ ha□ chan□ed□

DRA□ □ □□ D□ □□□
DAT□ □□□□□□□□

CCC □□□ □□□
□□□□□

□H□□T □□□
A□□

□□A□□Architectural□□□□□□□M□LC □ld□□A Architectural□□□□□□□A□□d□□

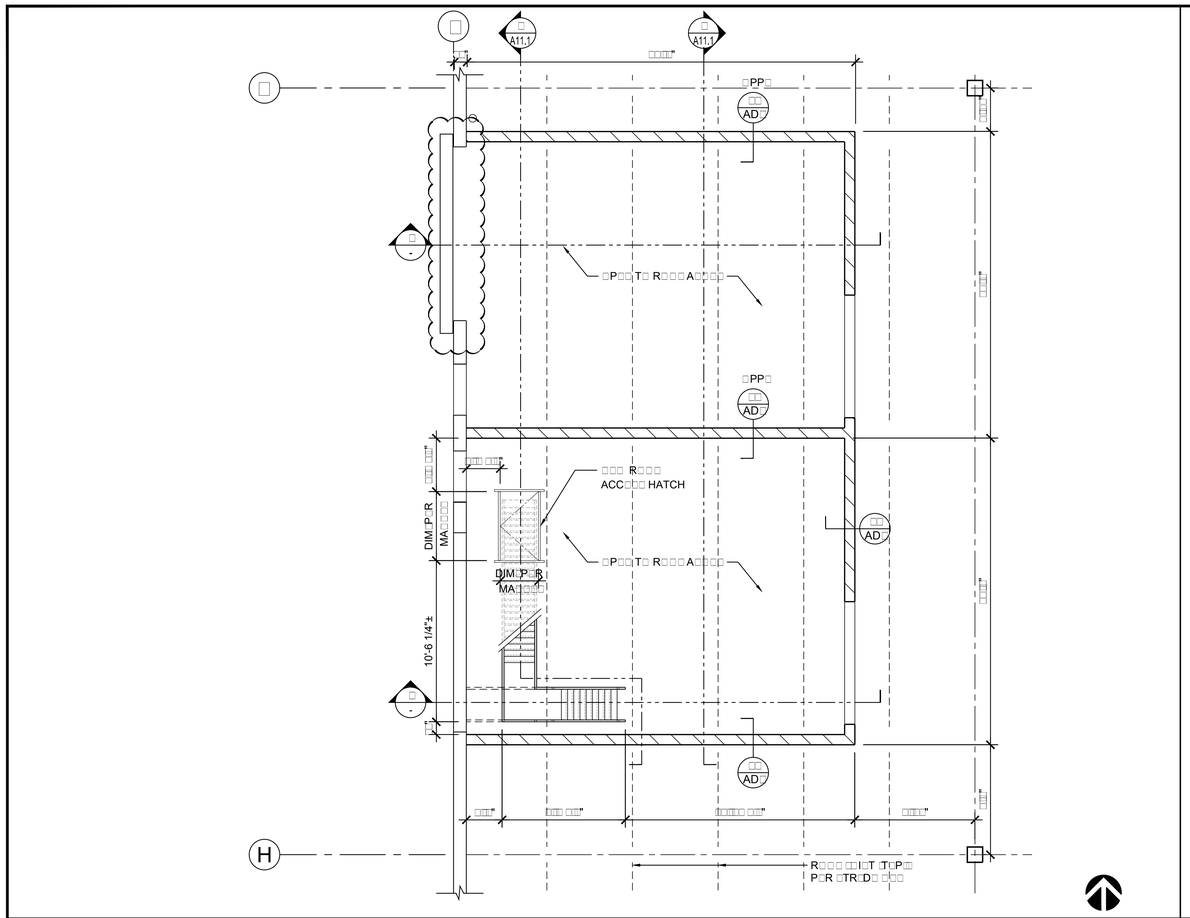

□□LAR□ □D □L□CTRICAL R□ □M □ P□MP R□ □M R□□L□CT□D C□ILI□□ PLA□

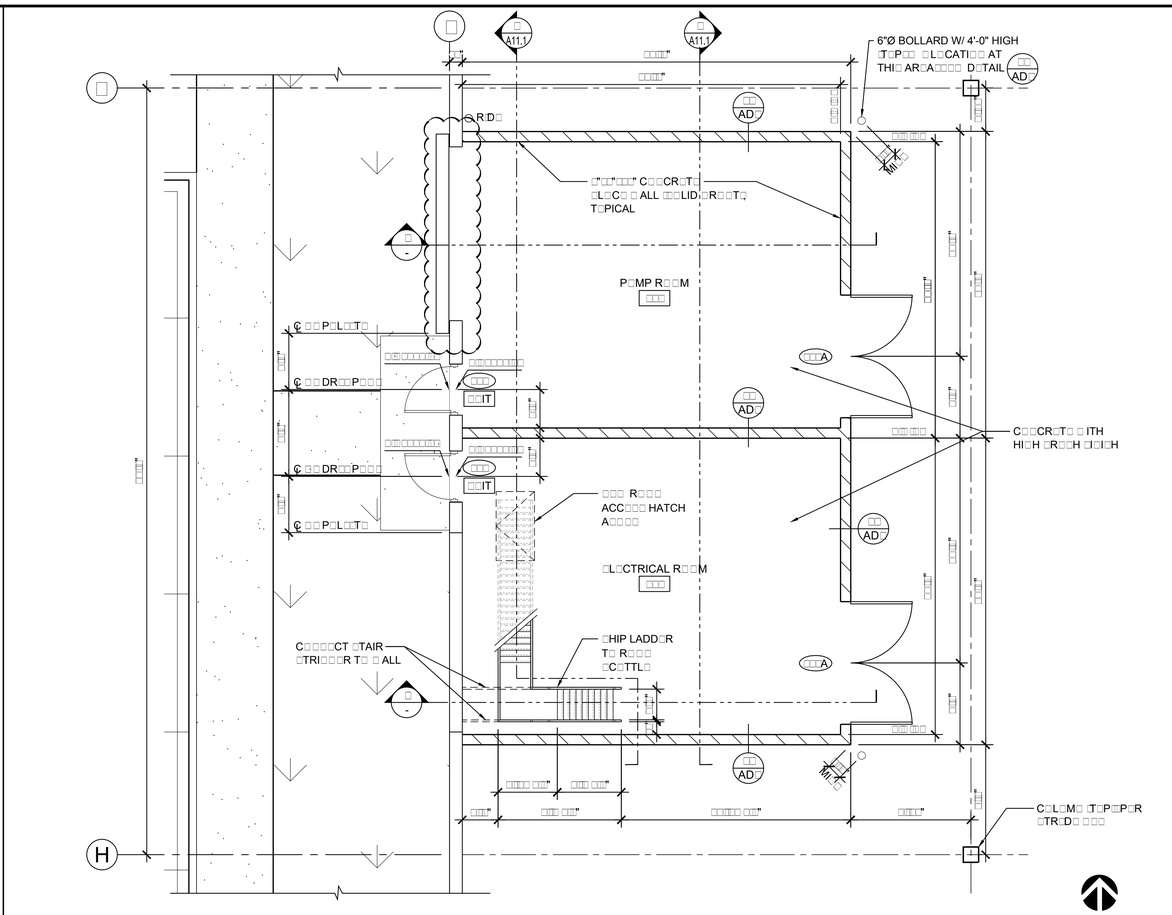

□□LAR□ □D □L□CTRICAL R□ □M □ P□MP R□ □M □L□ □R PLA□

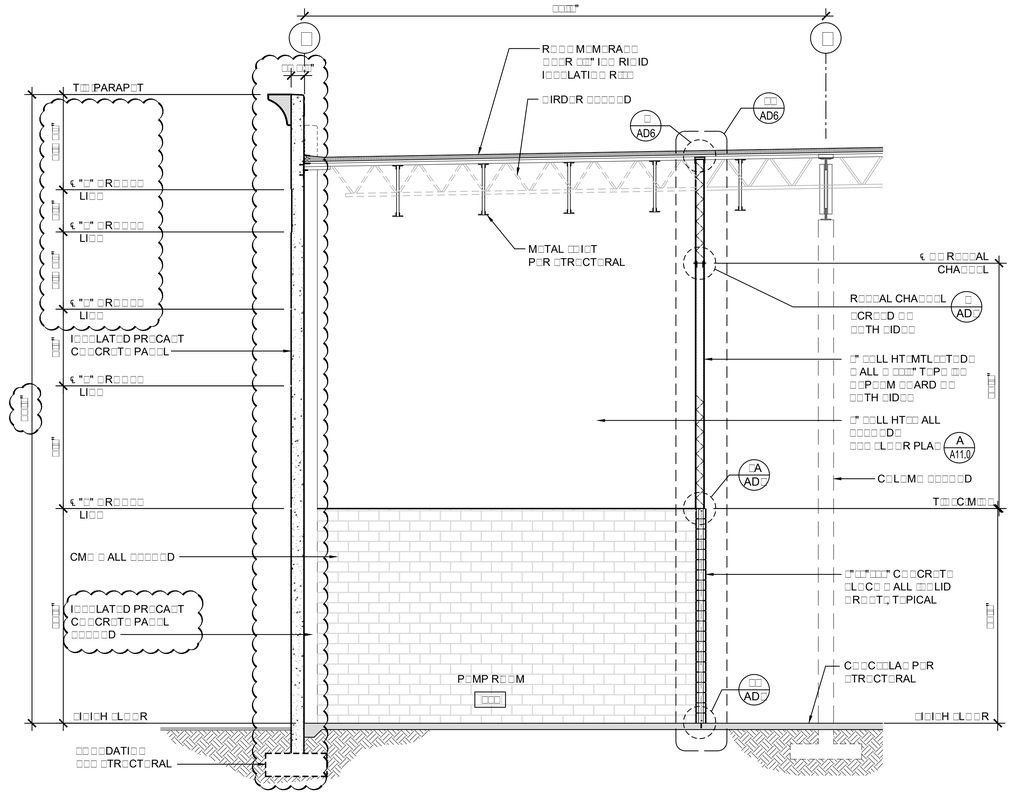

□□CTI□ □ THR□ □P□MP R□ □M

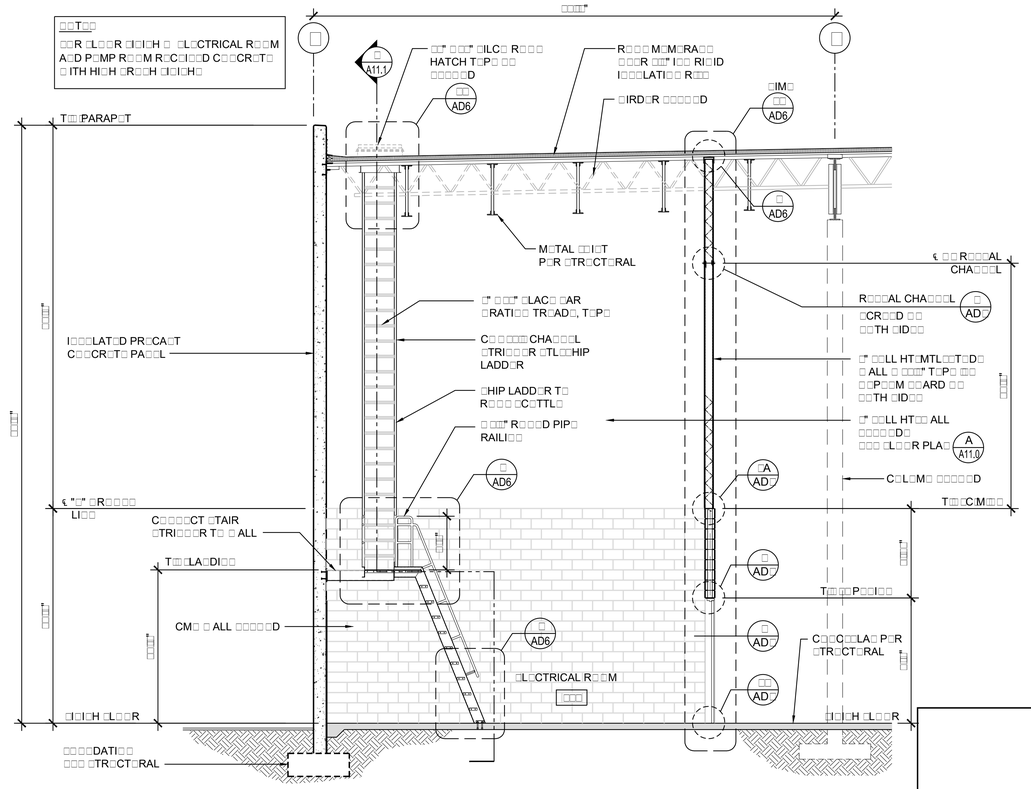

□□CTI□ □ THR□ □□HIP LADD□R T□ R□ □ □ HATCH □ □L□CTRICAL R□ □M

ELECTRICAL AND PUMP ROOM PLAN & SECTIONS

□ □ILDI□ □ A

MA□□TIC □AD □R L□ □□TIC □ C□ □T□R

CTH "H" □ILLA□ □ □ □PL□A□CT PRAIRI□, □ I

C□MM□RC□ C□□□TR□CTI□□ C□□□□□Cr□□□rad□Par□□a□□rth

Cit□th □□□

Cit□□□Indu□tr□, Cali□□rnia □□□□□□□□

□□th □□□

Tele□h□ne □□□□□□□□□□□□

Licen□e □□□□□□□□

Dra□in□ Pl□t □ar

Dra□ □ □□ DAT□

D□ □□□ □□□□□

CCC □□ □□□

□H□□T □□□

A□□□□

DAT□ | R□□□□□□ | DAT□ | R□□□□□□

This Document, Either in Drawing or the Assembly of Specifications, is the Property of Construction Co. L.P. ("Construction") and is to be used only with respect to this Project. Reuse, in whole or in part, of this document, without the written consent of Construction, is prohibited. Any and all rights, including ownership rights, in the property, in whole or in part, shall be retained by Construction. Any and all rights, including ownership rights, in the property, in whole or in part, created by the use of this document shall be deemed assigned to Construction at the time of such creation. Any and all rights, including ownership rights, in the property, in whole or in part, created by the use of this document by any other person or entity shall be deemed assigned to Construction at the time of such creation. Any use of this document in violation of this notice is prohibited and shall be actionable under the Copyright Act of 1976, 17 U.S.C. § 101 et seq.

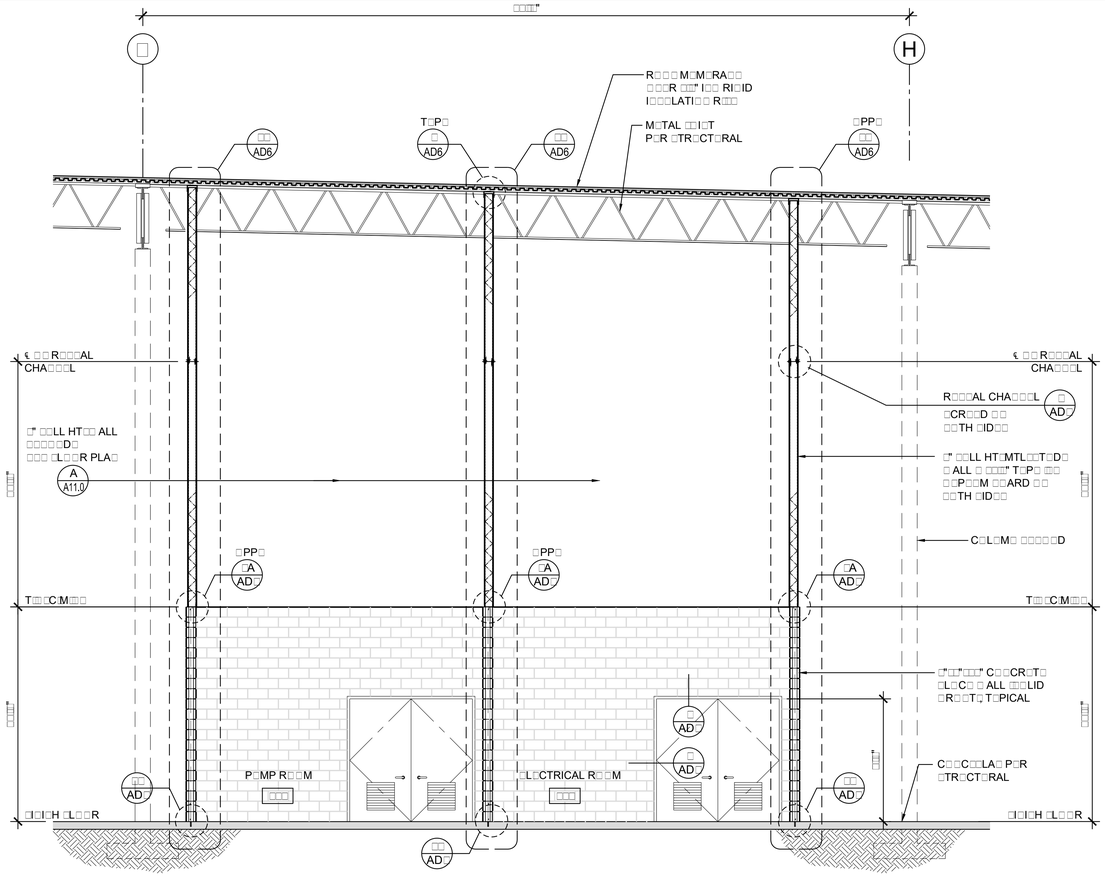

□□CTI□□ THR□□□L□CTRICAL A□D P□MP R□□M

□CAL□□
□□" □ □□□"

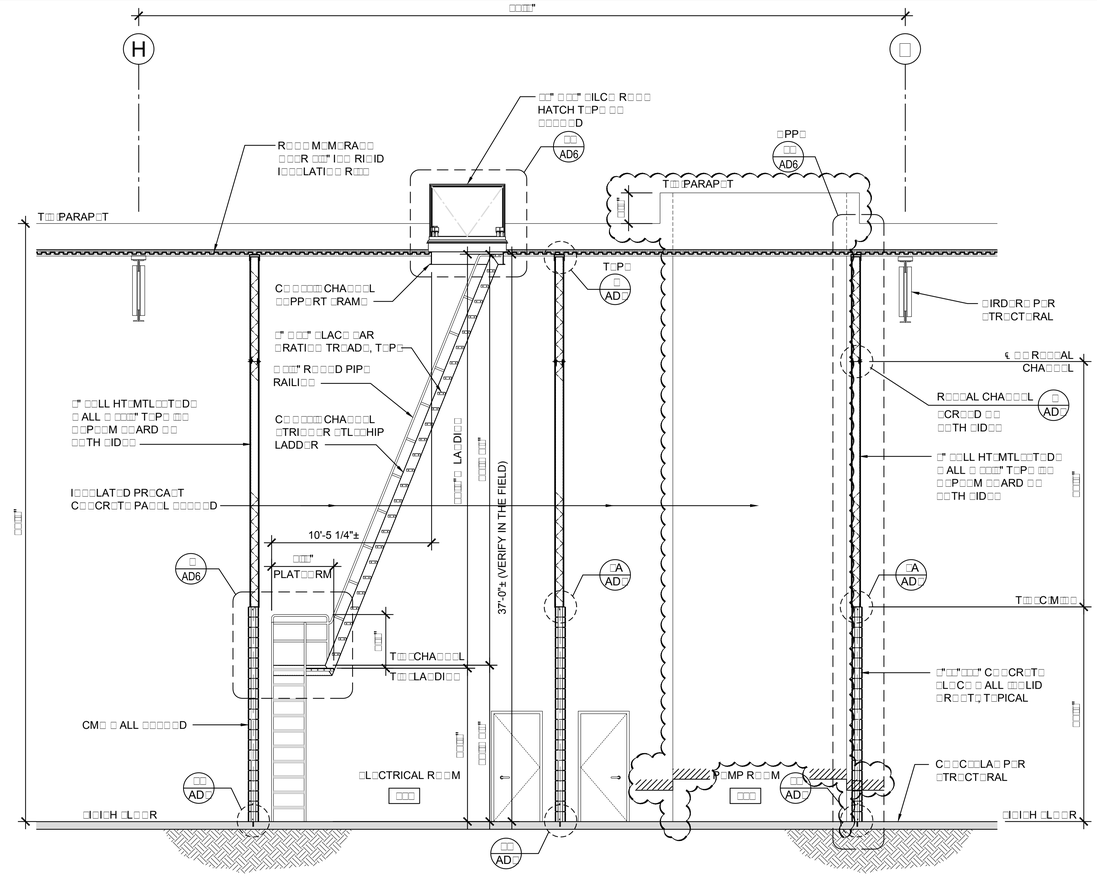

□□CTI□□ THR□□□HIP LADD□R T□ R□□□ HATCH □ □L□CTRICAL A□D P□MP R□□M

□CAL□□
□□" □ □□□"

The Drawings, Ideas or Designs in this Assemblage of Drawings are the property of C□□□TR□CTI□□ C□□□LP□ Construction Co. L.P. ("Contractor") and shall not be used by any person for any purpose other than as a joint work of the Contractor and the Owner of the Project. Such ideas, designs, arrangements and plans are not to be used, in whole or in part, for any other purpose without the written consent of Contractor. This notwithstanding, Owner shall have a non-exclusive, perpetual right to maintain, use, advertise, display, transfer, and make copies of the Drawings in connection with the Project, subject to the terms and conditions of the Contract between Contractor and Owner, provided that Owner shall not use the Drawings for any other project or purpose without the written consent of Contractor. The Drawings and all copies thereof are to be returned to Contractor upon request.

		DAT□
		□□
		R□□□□□□
		DAT□
		□□
		R□□□□□□

C□MM□RC□ C□□□TR□CTI□□ C□□□LP□
□□□□ Cr□□r□ad□Par□□a□□□rth
□□th □□□r
Cit□□Indu□tr□ Cali□rnia □□□□□□□□□
Tele□h□ne □□□□□□□□□□□□
Licen□e □□□□□□□□□

ELECTRICAL AND PUMP ROOM SECTIONS

□□ILDI□□ A

MA□□□TIC □AD□□R L□□□I□TIC□ C□□T□R

CTH "H" □ILLA□□ □□PL□A□T PRAIRI□, □ I

Dra□in□ Pl□t □ar

□□" □□"

□□ the □□□□ □ar □□ □□□□ □□ dra□in□ ha□ □□□ been reduced □r enlarged □□□□ □□ □□□nal □□□□ □□□□ □ar □□□□ □□ exact □□ inch □□□ the □□□□al □□a □□dra□in□ ha□ chan□ed□

DRA□ □ □□ DAT□
D□ □□□ □□□□□

CCC □□□ □□□
□□□□□

□H□□T □□□

A□□□□

□□A□□□Architectural□□□□□□M□LC□□Id□□A□Architectural□□□□□□A□□□□d□□

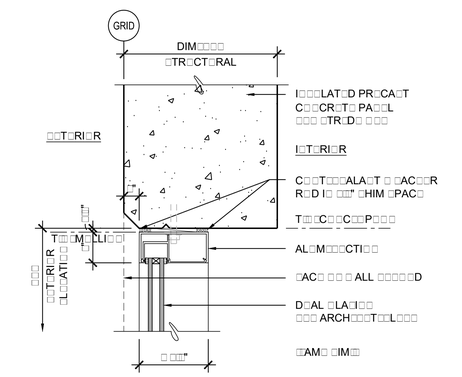

HEAD OF CURTAIN WALL

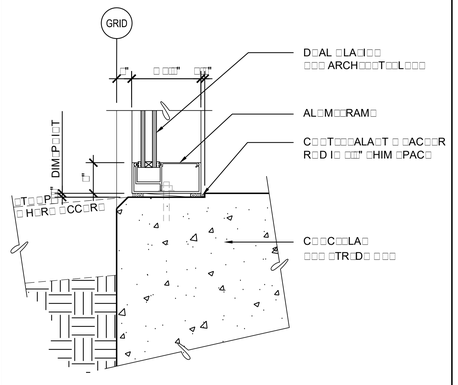

SILL OF CURTAIN WALL

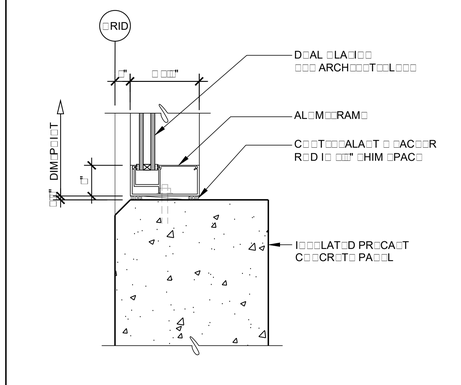

SILL OF CURTAIN WALL

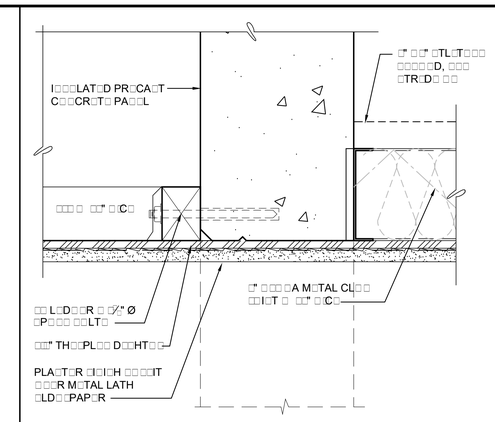

FOOTING

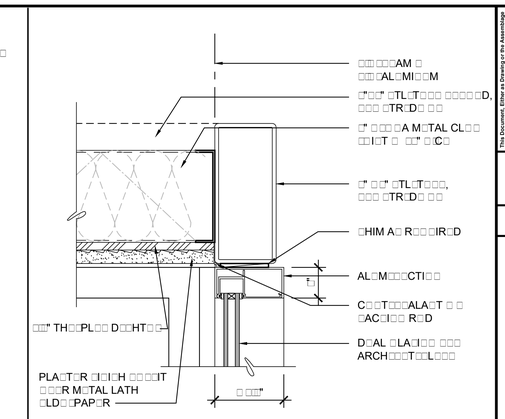

HEAD AT FOOTING

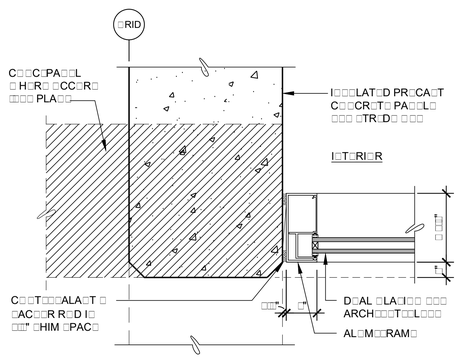

CAP OF CURTAIN WALL

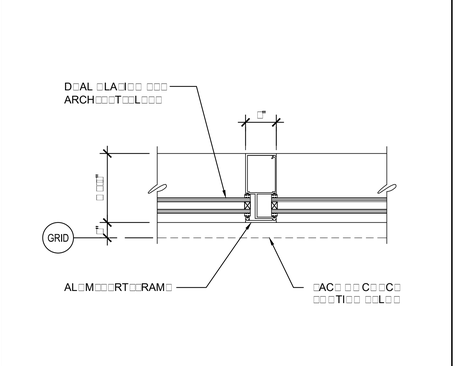

SILL OF CURTAIN WALL

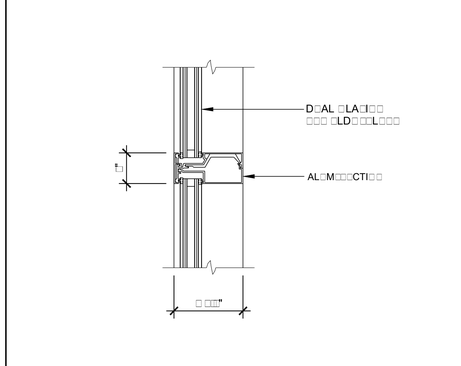

HORIZONTAL MULLION

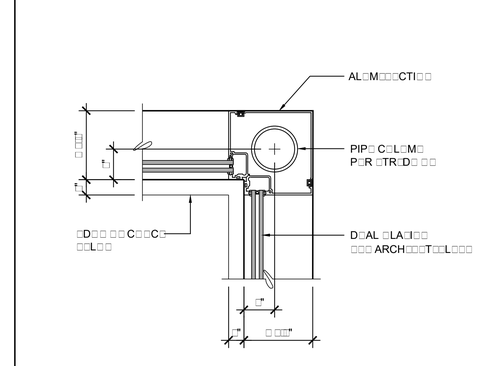

INSIDE CORNER MULLION

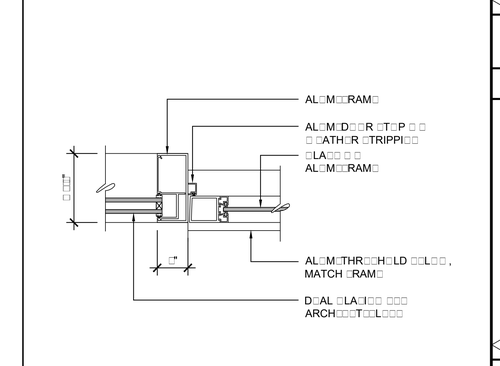

DOOR JAMB DETAIL

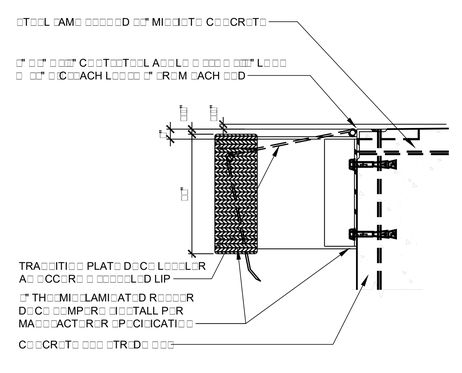

LADING DOCK BUMPER

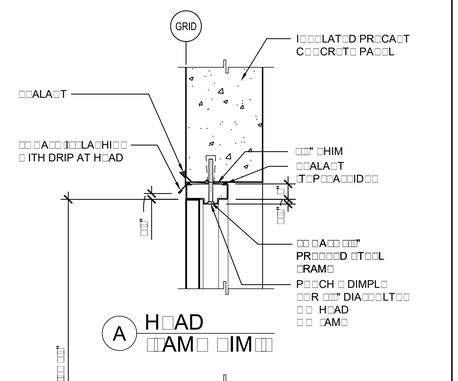

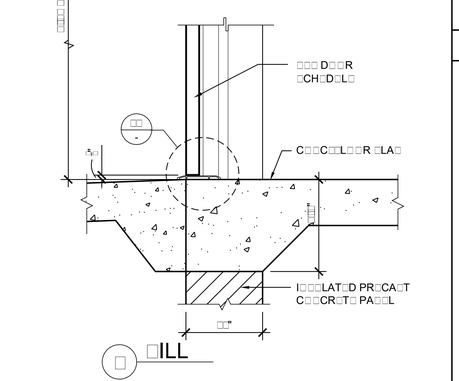

TRANSOM DETAIL

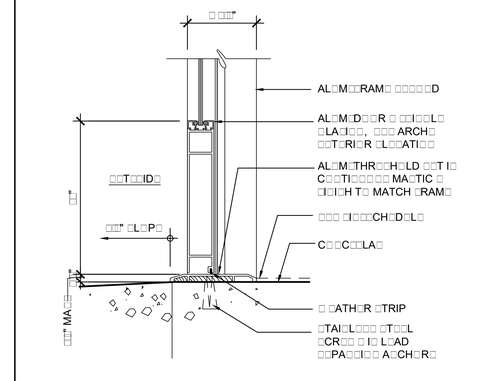

DOOR THRESHOLD DETAIL

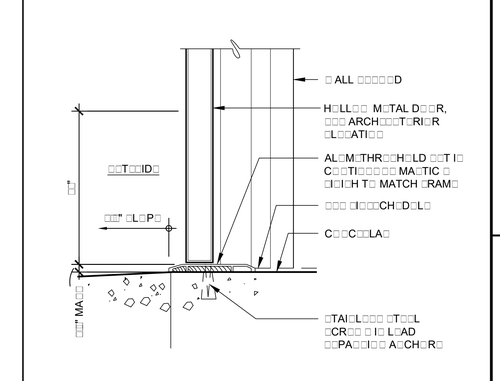

DOOR THRESHOLD DETAIL

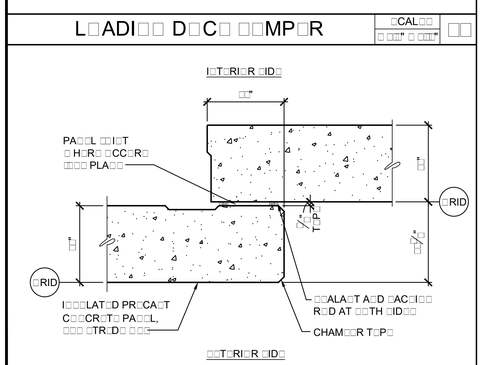

PARAPET

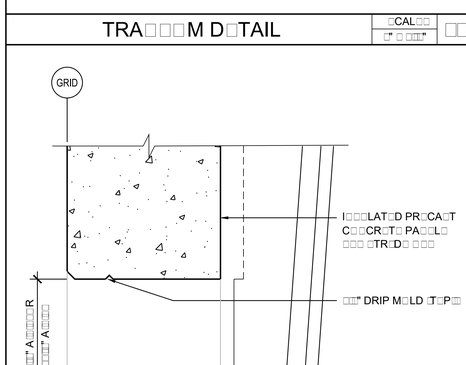

HEAD AT VERTICAL LIFT DOOR

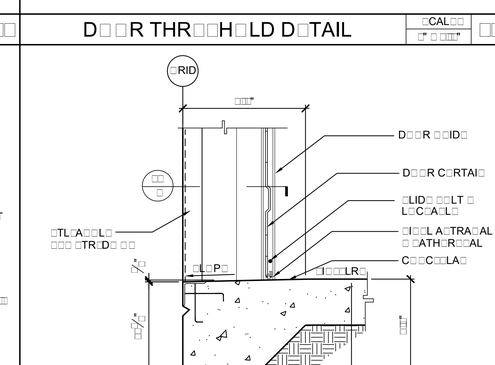

SILL OF VERTICAL LIFT DOOR

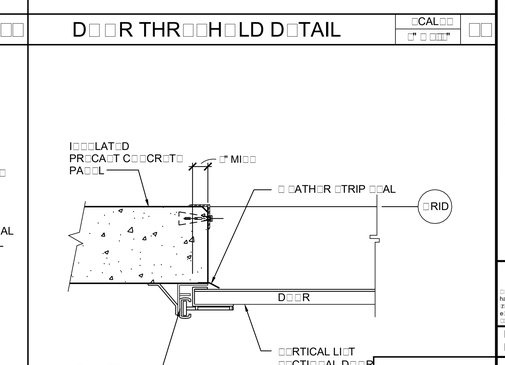

JAMB @ VERT. LIFT DOOR

This Document, Either in Drawing or Electronic Format, Is Property of Mid-Continent Construction Co. L.P. ("Contractor") and Is Subject to Its Exclusive Ownership, Control and Use. Contractor Retains Its Ownership Rights in Such Document Even Upon Its Delivery to Others. Such Document Is Not To Be Used, Copied, Reproduced, Modified, Published, Uploaded, Posted, Transmitted, or Distributed in Any Way Without the Written Consent of Contractor. This Document Is Furnished Only for Review and Use by Recipient Agreeing to Return It and Not Copy or Disclose It to Others Upon Request. Any Use of Such Document Other Than Review Shall Be Deemed Acceptance of the Terms of This Legend and Shall Obligate Recipient to Pay Contractor Its Fees and Expenses Incurred in Enforcing Its Rights Under This Legend.

	DAT	
	DAT	

C MMERC C TRACT C LP
Cr ad Par a orth
th
Cit Indu tr Cali mia
Tele hone
Licen e

MI C LLA ILDING A
MA TIC AD R L TIC C T R
CTH "H" LLA PLA AT PRAIRIE, I

Dra in Pl t ar
ORIGINAL DRAWING (24 x 36) This drawing has not been reduced or enlarged. If not original size, the following scale applies: 1 inch = the original size of the 24x36 drawing.

DRA DAT
D

CCC

HOOT

AD

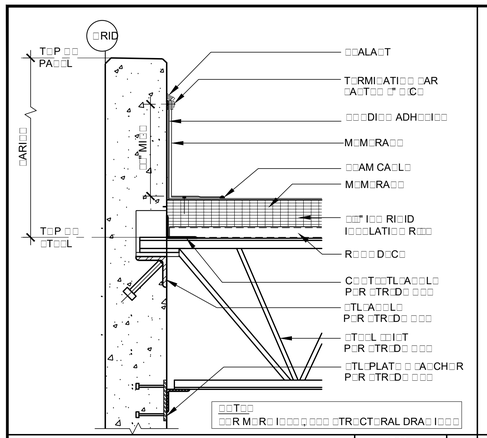

PARAPET CONTI, TOP | CAL | 1

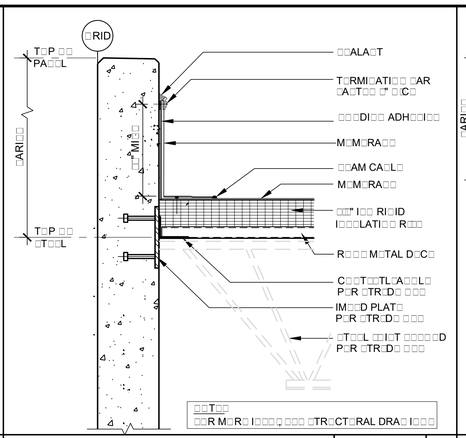

PARAPET CONTI, TOP | CAL | 2

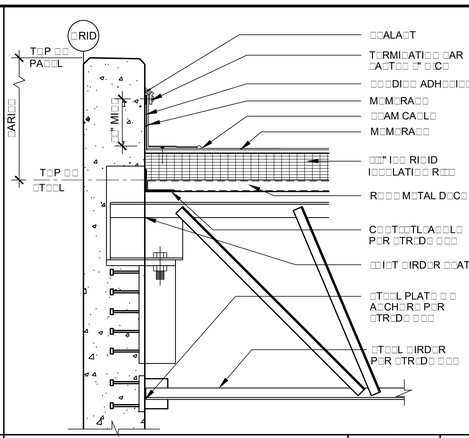

PARAPET CONTI, TOP | CAL | 3

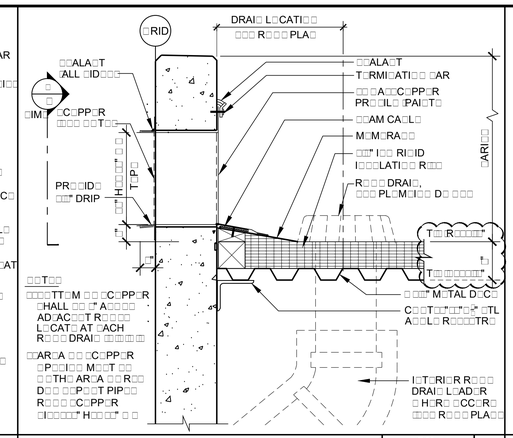

DRAI AND RELI CONTI | CAL | 4

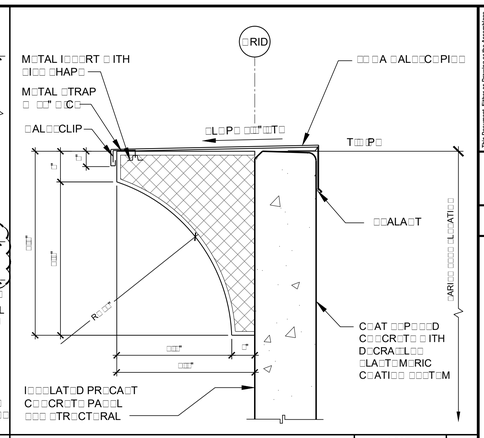

MILDI DETAIL | CAL | 5

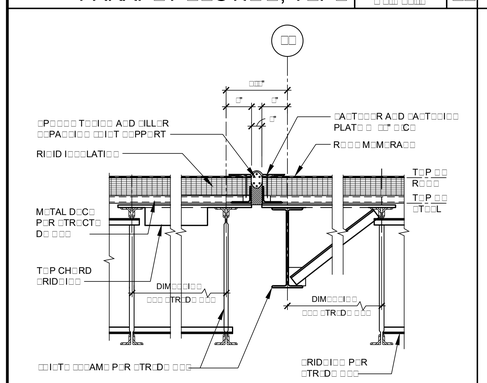

REPAIRING PAIT | CAL | 6

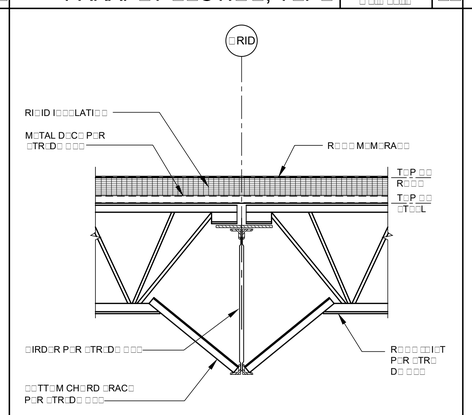

REPAIRING CONTI, TOP | CAL | 7

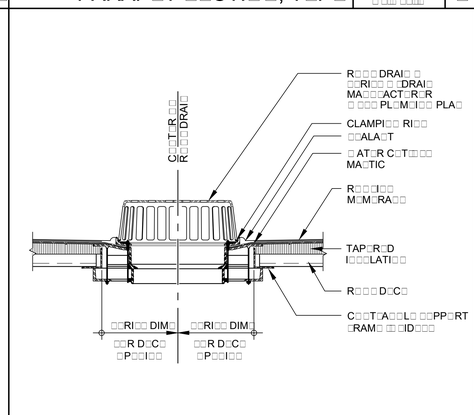

REPAIRING DRAI DETAIL | CAL | 8

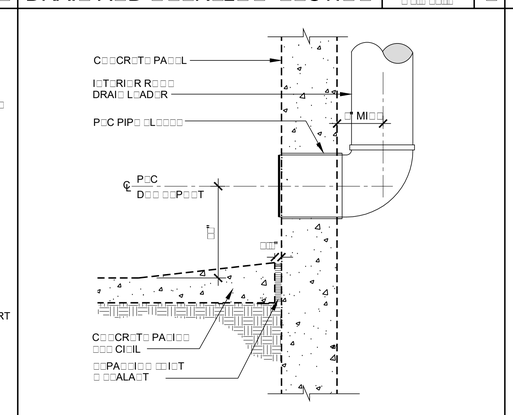

REPAIRING DRAI LADER TLOT | CAL | 9

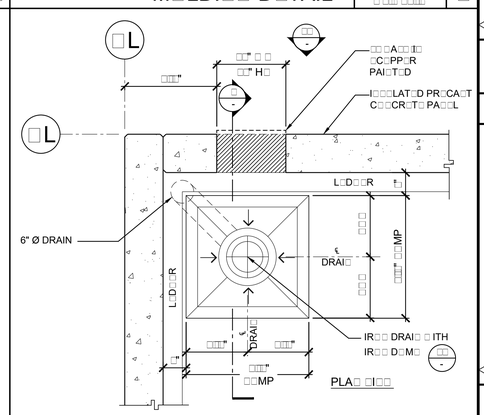

REPAIRING DRAI AND RELI | CAL | 10

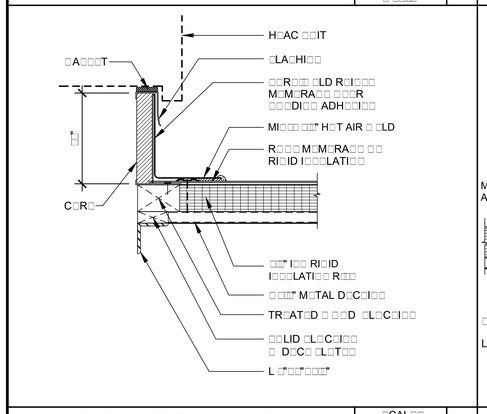

CRAT RPI | CAL | 11

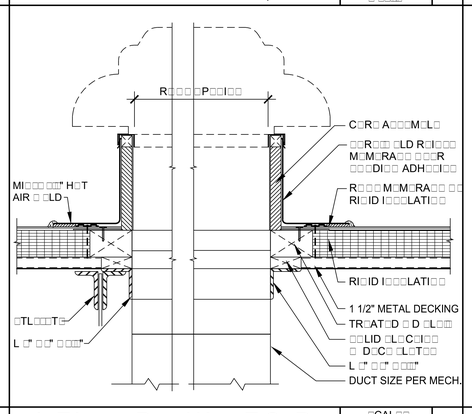

ITA RHAT CR | CAL | 12

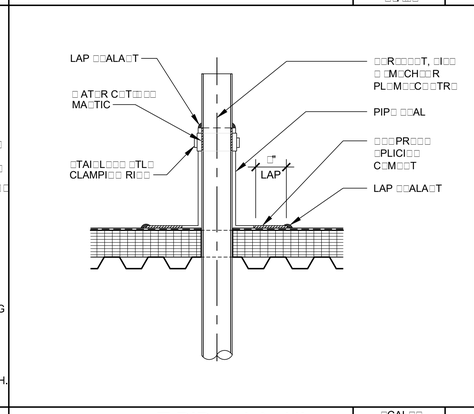

TPIP LAHI | CAL | 13

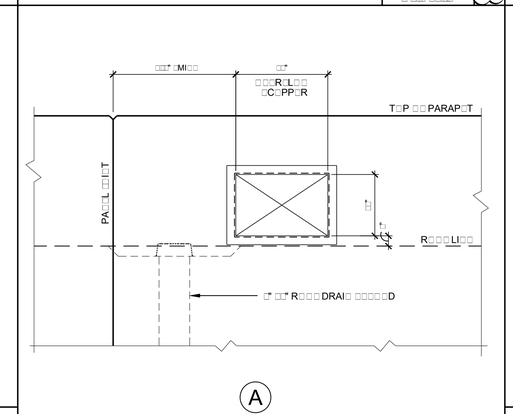

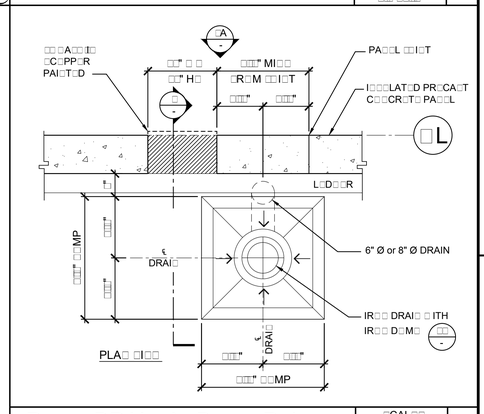

REPAIRING DRAI AND RELI | CAL | 14

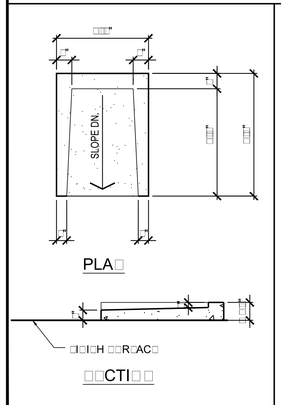

PLAH LC | CAL | 15

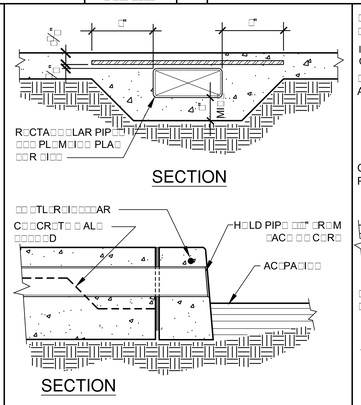

DRAIN THRU CURB DETAIL | CAL | 16 | 1 1/2"=1'-0"

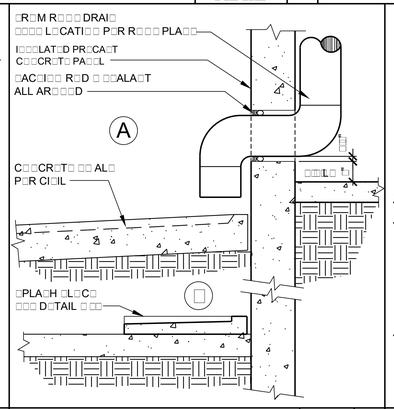

DRAI THR ALL DETAIL | CAL | 17

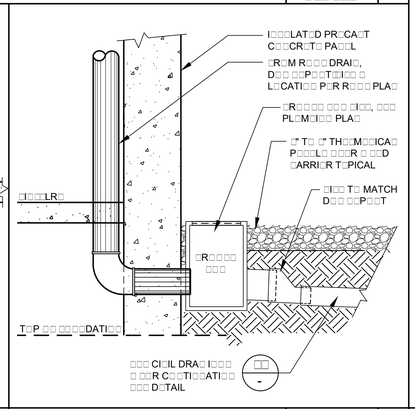

RDTAIL | CAL | 18

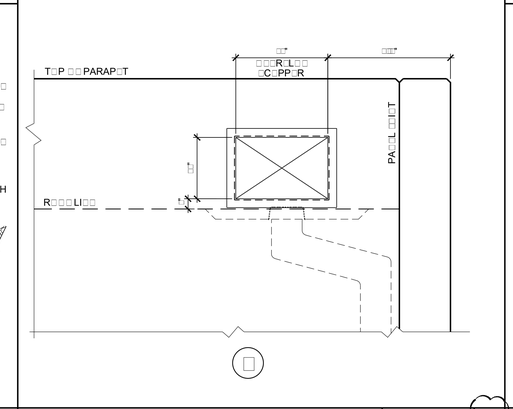

OVERFLOW SCUPPER ELEVATION | CAL | 19

This Document, Either in Drawing or the Assembly Specification, Is Property of Mid-Continent Construction Co. L.P. ("Contractor") and Is Subject to Its Intellectual Property Rights. Such Rights, Inter Alia, Include Copyright, Which Is Asserted Without Limitation. Any Use Of This Document Without the Written Consent of Contractor. This Document Is Not Intended for Construction Purposes Unless Signed by an Authorized Representative of Contractor. Any Use Of This Document Not Authorized in Writing Is Prohibited. This Document Is Not Intended for Use and Is Not Authorized for Use, Any Use Of This Document Not Authorized in Writing Is Prohibited.

DAT	
R	
DAT	
R	

Company: Mid-Continent Construction Co. L.P.
Address: Crandall, Parkway
City: Industry, California
Telephone: [illegible]
License: [illegible]

MICELLANEOUS DETAILS

MAATIC RADER LIATIC CTER

CTH "H" ILLA PLA: ATER PRAIRIE, I

Drawing Plotted at

DRAWN DATE

CCC

AD

4x LEDGER WITH 1/2"Ø
CLAMP
3/4"Ø x 16" SMOOTH
This Document, Either as Drawing or the Assemblage of Electronic Data, is the Property of Commerce Construction Co., L.P. ("Commerce")
without the written consent of Commerce.
without warranty of any kind either expressed or implied.
and completeness. Commerce is not responsible for
document. The acceptance or use of this document will
CTH "H"
AD

1 1/2" Ø PIPE RAILING, TYP.
1 1/4" Ø PIPE
1 1/2" Ø PIPE GUARDRAIL, TYP.
1 1/4" Ø PIPE HANDRAIL, TYP.
1 1/2" Ø PIPE POST & RAIL
3/4"Ø EXP. BOLTS
6"Ø STEEL PIPE CONCRETE
2'-0"Ø
STOP
2- 1/4" x 4" LONG THRU
MOUNTING RAIL
CTH "H" VILLAGE OF PLEASANT PRAIRIE, WI
This Document, Either as Drawing or the Assemblage of Electronic Data, is the Property of Commerce Construction Co., L.P. ("Commerce")

TRASH ENCLOSURE GATE HINGE
CHAINLINK ROLLING GATE SECTION
CHAINLINK SLIDING GATE SUPPORT
SECTION @ RAMP & SCREENWALL
RAMP
TRASH
TOP RAIL
RAIL
3/4"Ø SOLID
1"Ø G.I. PIPE
4"Ø FENCE
4"Ø FENCE POST
6"Ø STEEL PIPE
6"Ø BOLLARD
1/2" Ø x 8" L. STL.
8'-3 1/2"±
CTH "H"
AD

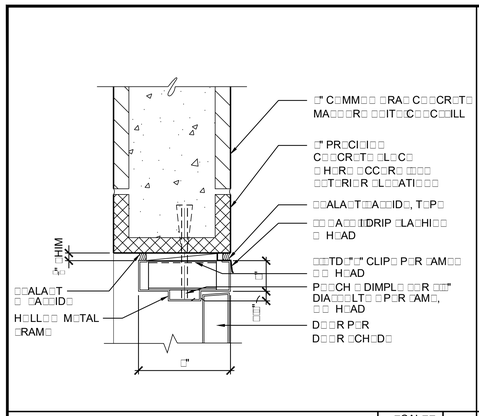

D R H AD CM ALL

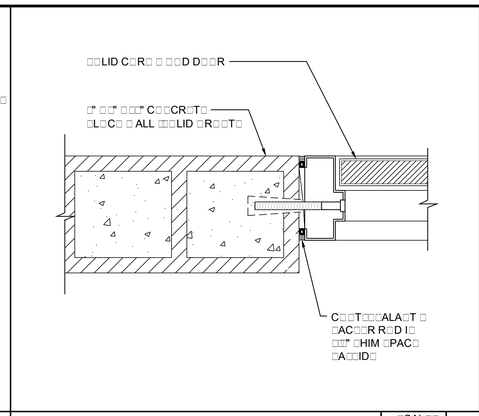

D R AM CM ALL

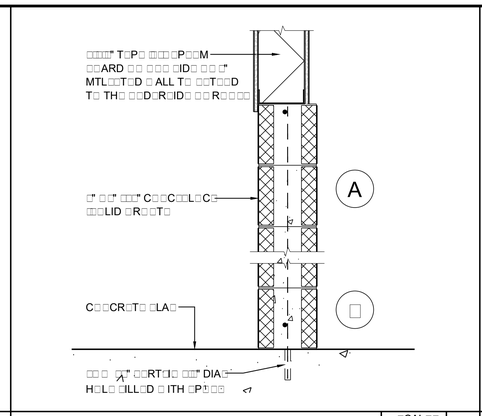

LL HT ALL CTI

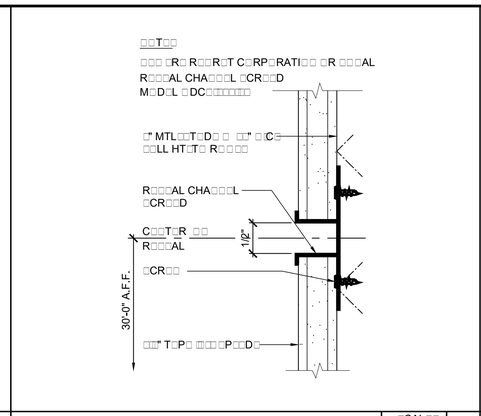

R AL CHA L CR D ALL

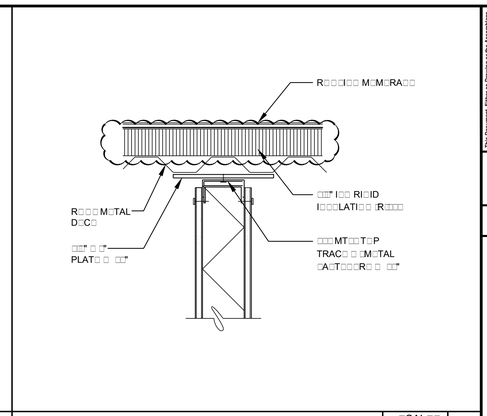

M TAL T D T R D C

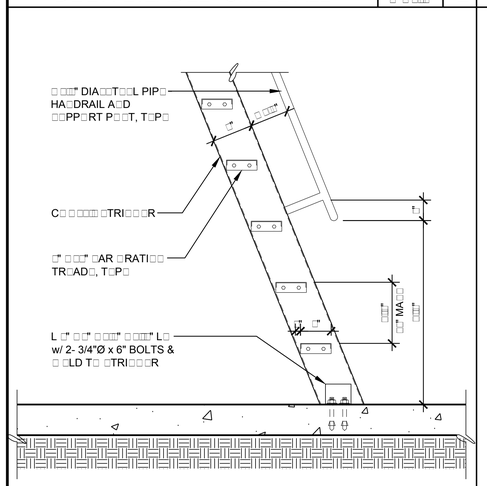

HIP LADD R L R

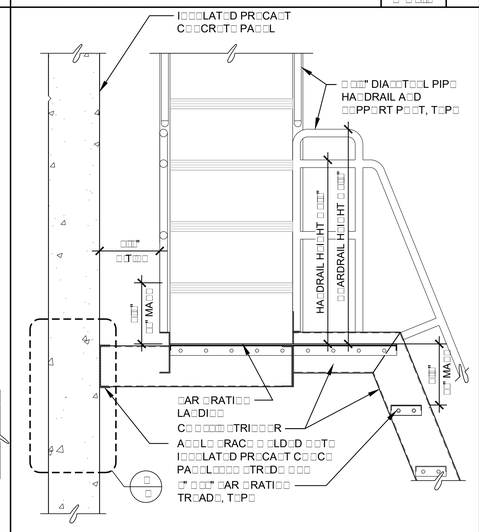

HIP LADD R LA DI

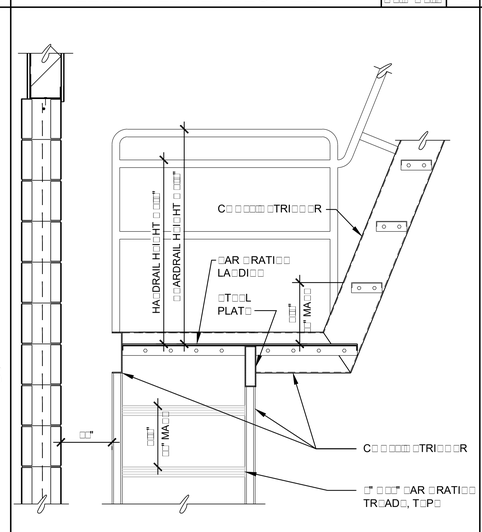

HIP LADD R LAA DI

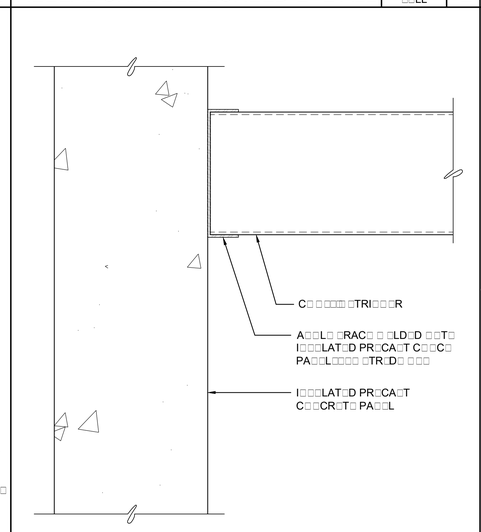

ARI PLAT

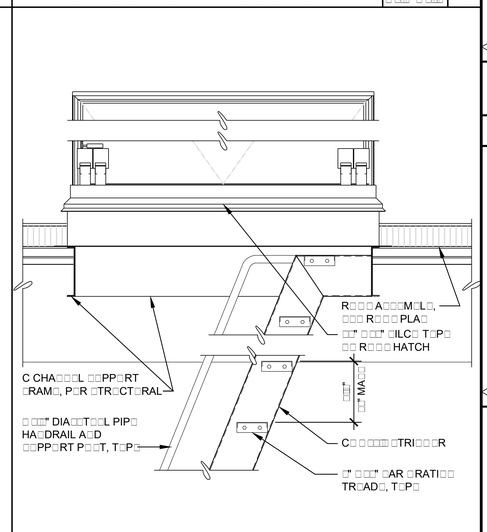

HIP LADD R R P I

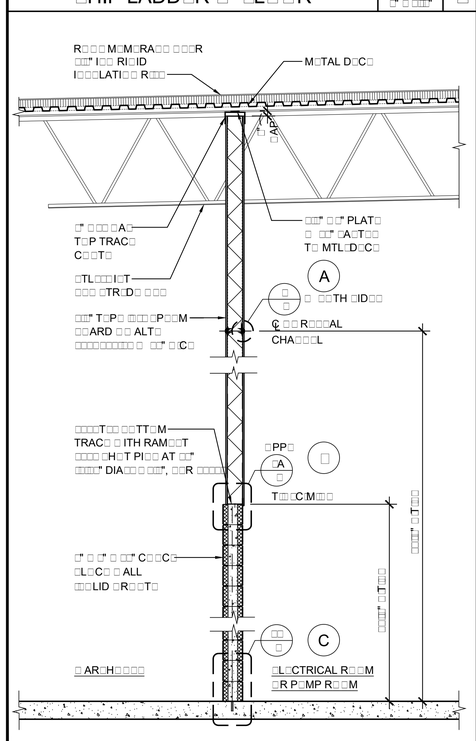

LL H I HT ALL

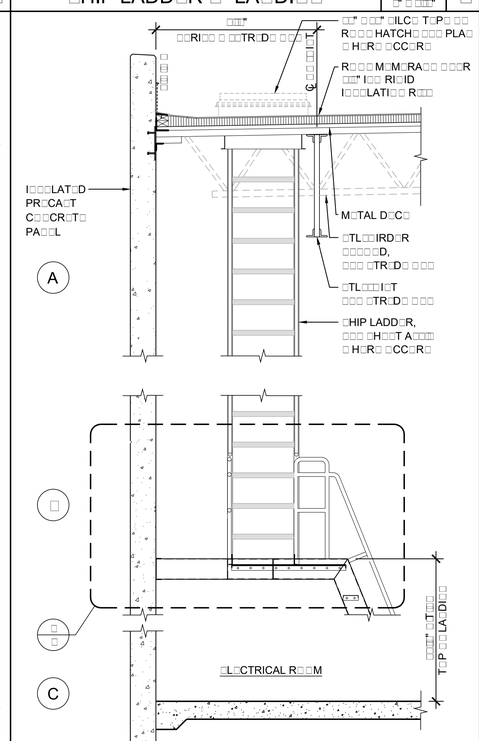

LL H I HT ALL

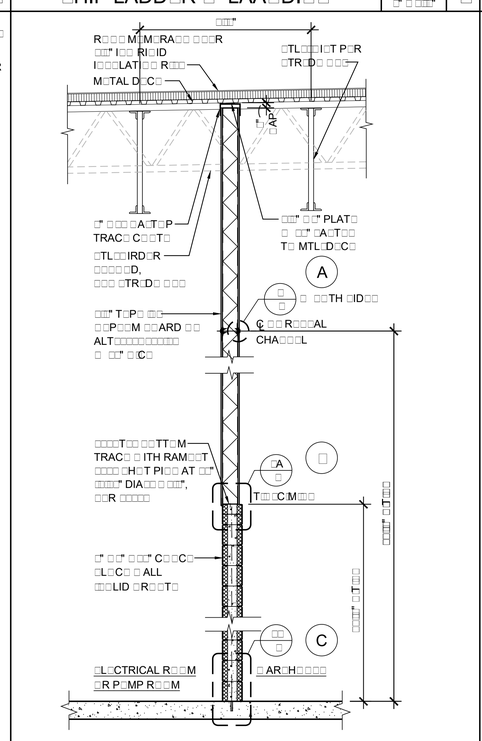

LL H I HT ALL

CAL

This Document, Either in Drawing or the Assembly Of Which It Is Part, Is Property Of Hoffman Construction Co. L.P. ("Contractor") and Is Not To Be Used, Copied, Or Reproduced In Whole Or In Part Without The Written Consent Of Contractor. This Document Is Not Intended For Use In Any Other Venue Or For Any Other Project Except Pursuant To A Written Agreement With Contractor. Any Alterations Made To This Document Without The Written Consent Of Contractor Are Prohibited. The Contractor Assumes No Responsibility For Any Alterations Made To This Document.

DAT
DAT
R
R

C: MM RC: C TRI CTI C LP
Cr ad: Par a: rth
Ct: Indu tr:, Cali mia
Tele h ne
Licen e

MI C LLA D TAIL
ILDI A
MA TIC AD R L I TIC C T R
CTH "H" ILLA PL A T PRAIRI, I

Dra in Pl t ar
Dr the t t ar t c n in dra in ha n t been reduced r enlarged n n in al t the t ar c n t exact inch in the ical c n dra in ha shan ed

DRA DAT
D

CCC

H T

AD

A Architectural M.LC 1d A Architectural M.LC AD d

ATTACH TRACK TO STUD AT EACH FLANGE
TOP TRACK
CHART
TRACK
CLOSURE PLATE
ALTERNATE
TRACK
CHANNEL
PARTITION WALL DETAIL
CTH "H" VILLAGE OF PLEASANT PRAIRIE, WI
AD

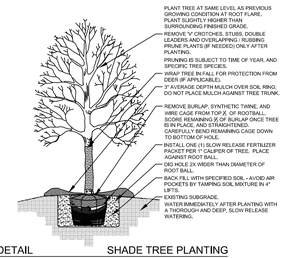

1 DETAIL SHADE TREE PLANTING
N.T.S. SECTION

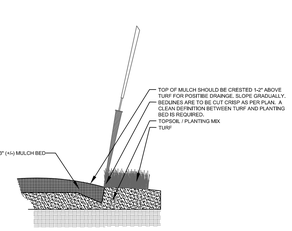

2 DETAIL SPADE EDGE PLANT BED EDGE DETAIL
N.T.S. SECTION

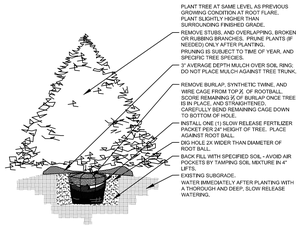

3 DETAIL EVERGREEN TREE PLANTING
N.T.S. SECTION

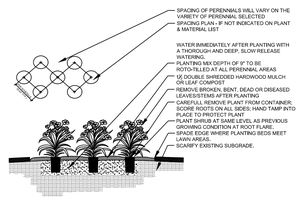

4 DETAIL GROUNDCOVER / PERENNIAL PLANTING
N.T.S. SECTION

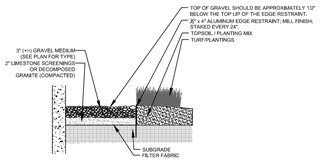

5 DETAIL GRAVEL MAINTENANCE DRIP EDGE DETAIL
N.T.S. SECTION

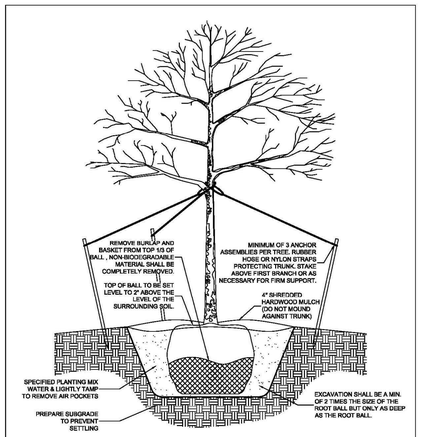

SCALE: NTS

PLEASANT PRAIRIE	STREET TREE PLANTING DETAIL	DETAIL: L - 1
	CREATED: 11-6-13	APPROVED BY: MATT FINEOUR
	REVISED: 11-11-15	

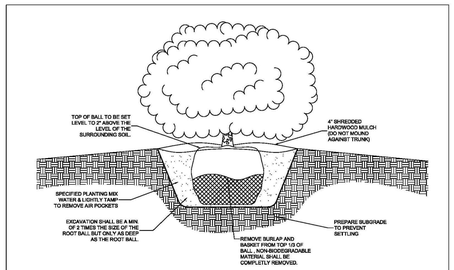

SCALE: NTS

PLEASANT PRAIRIE	SHRUB PLANTING DETAIL	DETAIL: L - 2
	CREATED: 11-06-13	APPROVED BY: MATT FINEOUR
	REVISED: 11-18-15	

DRAFTED: #### DESIGNED: #### REVIEWED: ####

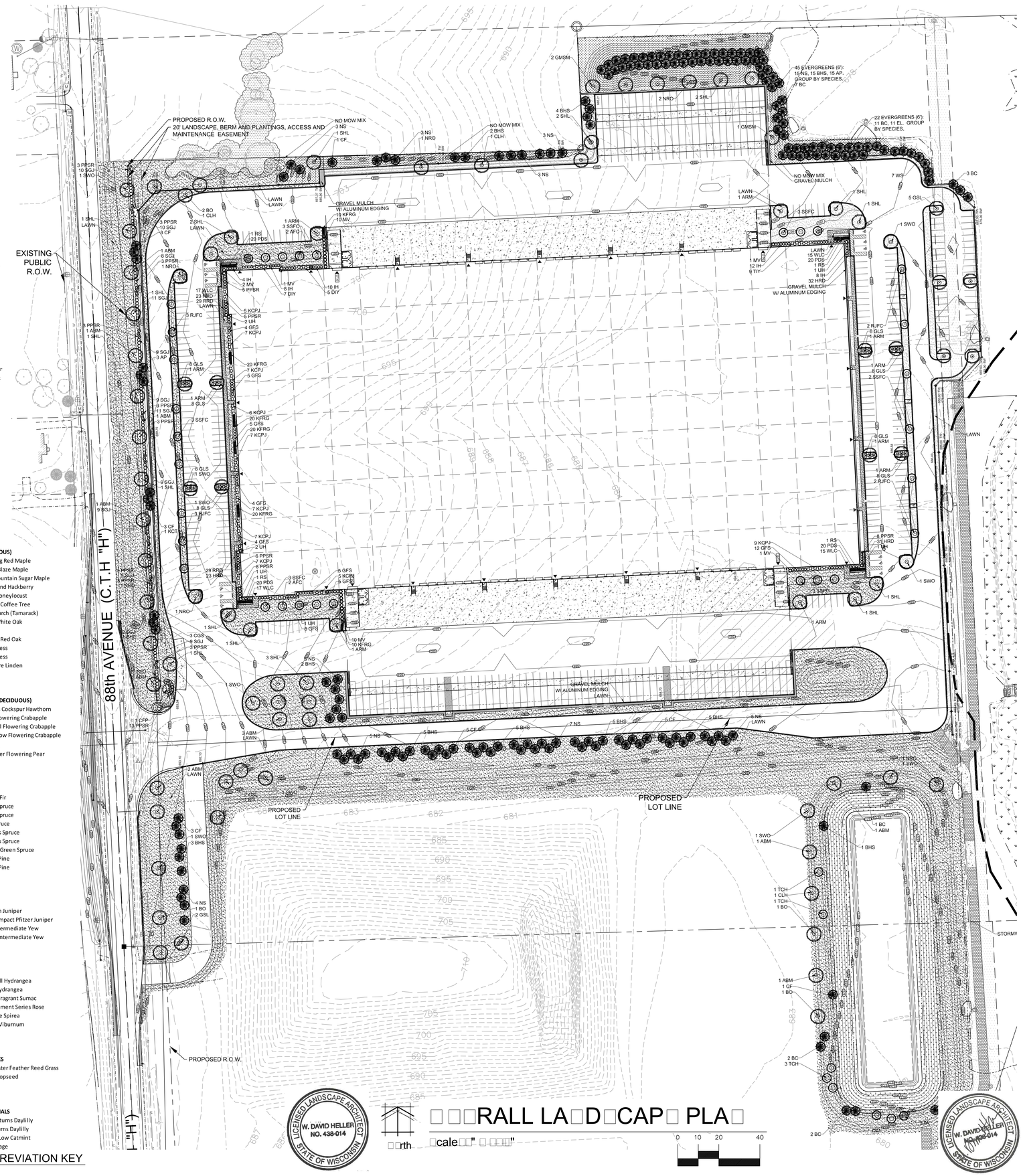

SHADE TREES (DECIDUOUS)

ARM	Armstrong Red Maple
ABM	Autumn Blaze Maple
GMSM	Green Mountain Sugar Maple
CLH	Chicagoland Hackberry
SHL	Skyline Honeylocust
KCT	Kentucky Coffee Tree
EL	Eastern Larch (Tamarack)
SWO	Swamp White Oak
BO	Bur Oak
NRO	Northern Red Oak
BC	Bald Cypress
BC	Bald Cypress
GSL	Greenspire Linden

ORNAMENTAL TREES (DECIDUOUS)

TCH	Thornless Cockspur Hawthorn
AFC	Adams Flowering Crabapple
RJFC	Red Jewel Flowering Crabapple
SSFC	Spring Snow Flowering Crabapple
IW	Ironwood
CFP	Chanticleer Flowering Pear

EVERGREEN TREES

CF	Concolor Fir
NS	Norway Spruce
NS	Norway Spruce
WS	White Spruce
BHS	Black Hills Spruce
BHS	Black Hills Spruce
CGS	Colorado Green Spruce
AP	Austrian Pine
AP	Austrian Pine

EVERGREEN SHURBS

SGJ	Sea Green Juniper
KCPJ	Kallay Compact Pfitzer Juniper
DIY	Dense Intermediate Yew
TIY	Taunton Intermediate Yew

DECIDUOUS SHRUBS

IH	Incrediball Hydrangea
UH	Unique Hydrangea
GLS	Gro Low Fragrant Sumac
PPSR	Pink Pavement Series Rose
GFS	Goldflame Spirea
MV	Mohican Viburnum

ORNAMENTAL GRASSES

KFRG	Karl Foerster Feather Reed Grass
PDS	Prairie Dropseed

HERBACEOUS PERENNIALS

HRD	Happy Returns Daylilly
RRD	Rosy Returns Daylilly
WLC	Walker's Low Catmint
RS	Russian Sage

PLANT ABBREVIATION KEY

LICENSED LANDSCAPE ARCHITECT W. DAVID HELLER NO. 438-014 STATE OF WISCONSIN

□□□RALL LA□D□CAP□ PLA□

□□rth

□cale□□" □ □□□□"

0 10 20 40

This Document, Either in Drawing or the Assemblage of Drawings, Is Instrument of Service of Construction Co., L.P. ("Consultant").
Consultant is the owner of the copyright in and to the Drawings, including but not limited to, all ideas, designs, arrangements, and plans indicated or represented by these Drawings. No part of the Drawings may be copied, reproduced, disclosed to others, or used in connection with any other project other than the project for which the Drawings were prepared, without the prior written consent of Consultant. Any use of the Drawings for other projects or any other purpose, without the express written consent of Consultant, is prohibited. Any copy of the Drawings made by any entity other than Consultant is prohibited and Consultant disclaims any responsibility for such copies. Any use of the Drawings by any entity other than Consultant for any purpose other than that for which the Drawings were prepared is prohibited. Any use of the Drawings for any purpose other than that for which the Drawings were prepared, without the express written consent of Consultant, is prohibited. Any copy of the Drawings made by any entity other than Consultant is prohibited and Consultant disclaims any responsibility for such copies. Any use of the Drawings by any entity other than Consultant for any purpose other than that for which the Drawings were prepared is prohibited.

DAT□

R□□□□□

DAT□

□DH

ADDR□□□ILLA□□C□MM□□TY

R□□□□□

C□MM□RC□ C□□TR□CTI□□ C□□L□P□
□□□ Cr□□□ad□Par□□a□□rth
Cit□□Indu□tr□ Cali□mia □□□□□□
Tele□h□ne □□□□□□□□□□
Licen□□e □□□□□□□□

MA□□TIC□AD□□R L□□□TIC C□□T□R
□□th □TR□□T □C.T.H□"H"□□
PL□A□A□T PRARI□, □LC□□□

Dra□in□□PL□□□at

□□ Bu□□□□ □ar □□□ch□□□ dra□□□ha□□ n□□been reduced □r enlarged □□□□□□ □□□□al □□□Bu□□□□ □□□ar □□ n□t e□ual□□□ inch □□□ the □h□□□al □□□ □□□□□□ha□□chan□ed□□□

DRA□□ □□□ DAT□□
□□ DH

CCC □□□□□□
□□□□□□

□H□□T □□□

L□□□

LICENSED LANDSCAPE ARCHITECT W. DAVID HELLER NO. 438-014 STATE OF WISCONSIN

TO OBTAIN LOCATIONS OF PARTICIPANTS UNDERGROUND FACILITIES BEFORE YOU DIG IN WISCONSIN

DIGGERS HOTLINE

CALL DIGGERS HOTLINE
811 or 1-800-242-8511
MILW. AREA 259-1181
WIS STATUTE 182.0175(1974)
REQUIRES MIN. 3 WORK DAYS
NOTICE BEFORE YOU EXCAVATE

HELLER & ASSOCIATES, LLC
LANDSCAPE ARCHITECTURE
One Redwood Court
Racine, Wisconsin 53402
ph 262.639.9733
fx 262.639.9737
david@wdavidheller.com

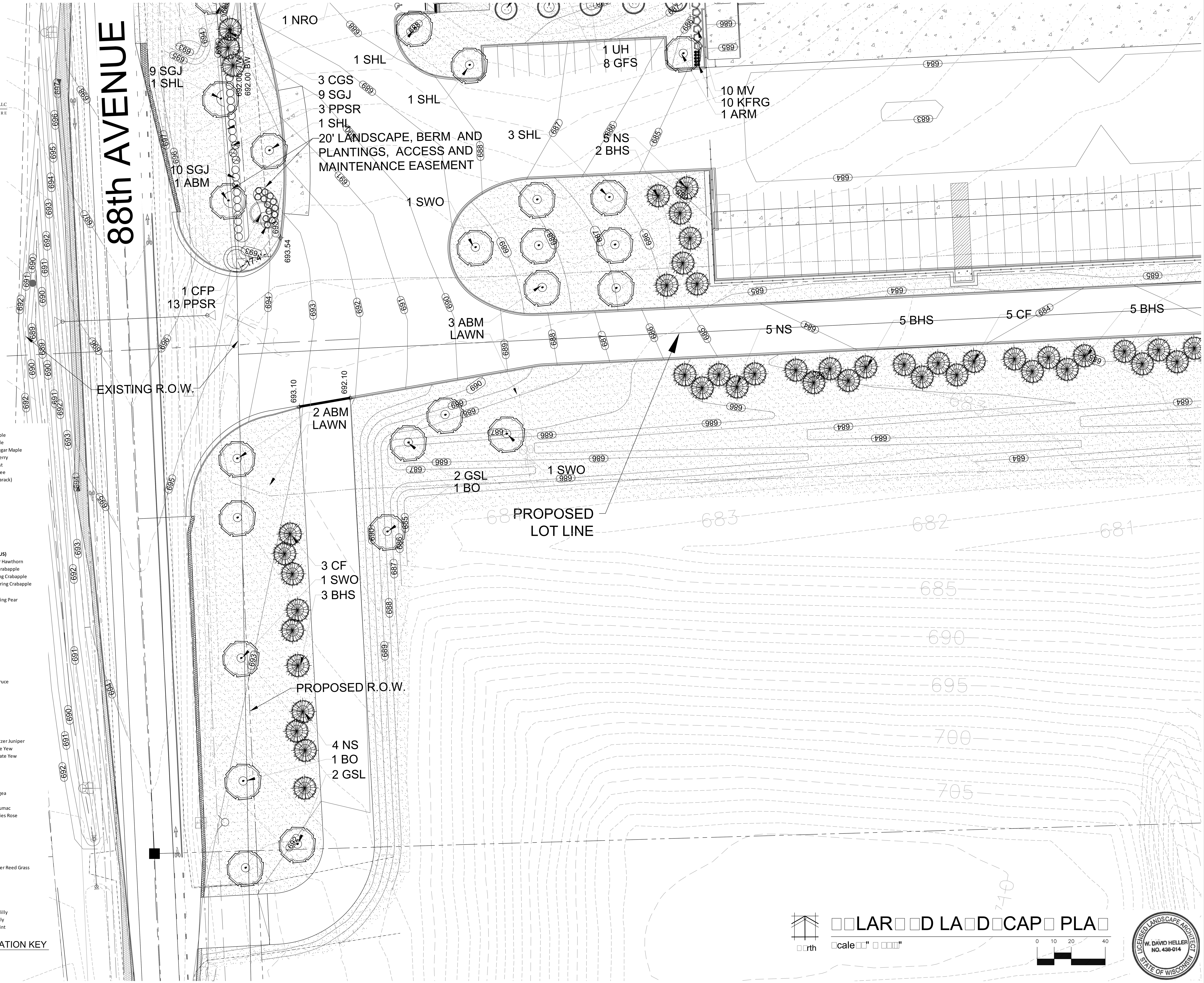

SHADE TREES (DECIDUOUS)

ARM	Armstrong Red Maple
ABM	Autumn Blaze Maple
GMSM	Green Mountain Sugar Maple
CLH	Chicagoland Hackberry
SHL	Skyline Honeylocust
KCT	Kentucky Coffee Tree
EL	Eastern Larch (Tamarack)
SWO	Swamp White Oak
BO	Bur Oak
NRO	Northern Red Oak
BC	Bald Cypress
BC	Bald Cypress
GSL	Greenspire Linden

ORNAMENTAL TREES (DECIDUOUS)

TCH	Thornless Cockspur Hawthorn
AFC	Adams Flowering Crabapple
RJFC	Red Jewel Flowering Crabapple
SSFC	Spring Snow Flowering Crabapple
IW	Ironwood
CFP	Chanticleer Flowering Pear

EVERGREEN TREES

CF	Concolor Fir
NS	Norway Spruce
NS	Norway Spruce
WS	White Spruce
BHS	Black Hills Spruce
BHS	Black Hills Spruce
CGS	Colorado Green Spruce
AP	Austrian Pine
AP	Austrian Pine

EVERGREEN SHURBS

SGJ	Sea Green Juniper
KCPJ	Kallay Compact Pfitzer Juniper
DIY	Dense Intermediate Yew
TIY	Taunton Intermediate Yew

DECIDUOUS SHRUBS

IH	Incrediball Hydrangea
UH	Unique Hydrangea
GLS	Gro Low Fragrant Sumac
PPSR	Pink Pavement Series Rose
GFS	Goldflame Spirea
MV	Mohican Viburnum

ORNAMENTAL GRASSES

KFRG	Karl Foerster Feather Reed Grass
PDS	Prairie Dropseed

HERBACEOUS PERENNIALS

HRD	Happy Returns Daylilly
RRD	Rosy Returns Daylilly
WLC	Walker's Low Catmint
RS	Russian Sage

PLANT ABBREVIATION KEY

REVIEWED: ####
DESIGNED: ####
DRAFTED: ####

North

LARD LADCAP PLA

Scale: " = "

0 10 20 40

LICENSED LANDSCAPE ARCHITECT
W. DAVID HELLER
NO. 438-014
STATE OF WISCONSIN

This Document, Either as Drawing or the Assemblage of Electronic Data, is the Property of Commerce Construction Co., L.P. ("Commerce"). This document, including all electronic data attached therein, may not be reproduced, distributed, modified, used or implemented in any way, in whole or in part, without the written consent of Commerce. This document shall not be used as a replacement for the original sealed document and is without warranty of any kind either expressed or implied. Any alteration or manipulation of this document is not responsible for accuracy and completeness. Commerce is not responsible for edited or reproduced versions of digital data of this document. The acceptance or use of this document will be construed as an acceptance of the terms.

DATE | R | DATE | DH | ADDR ILLA COMMENT | R

COMMERCE CONSTRUCTION CO., L.P.
Crossroad Parkway North
City of Industry, California
Telephone
License

LARD LADCAP PLA
MA TIC AD R L I TIC C T R
th TR T C T H " "
PL A A T PRARI , I C I

Drawing Plot Bar
Use this plot bar to confirm drawing has not been reduced or enlarged from original. If this plot bar is not exactly 1 inch long the physical size of drawing has changed.

DRAWN DATE
DH

CCC

SHEET

L

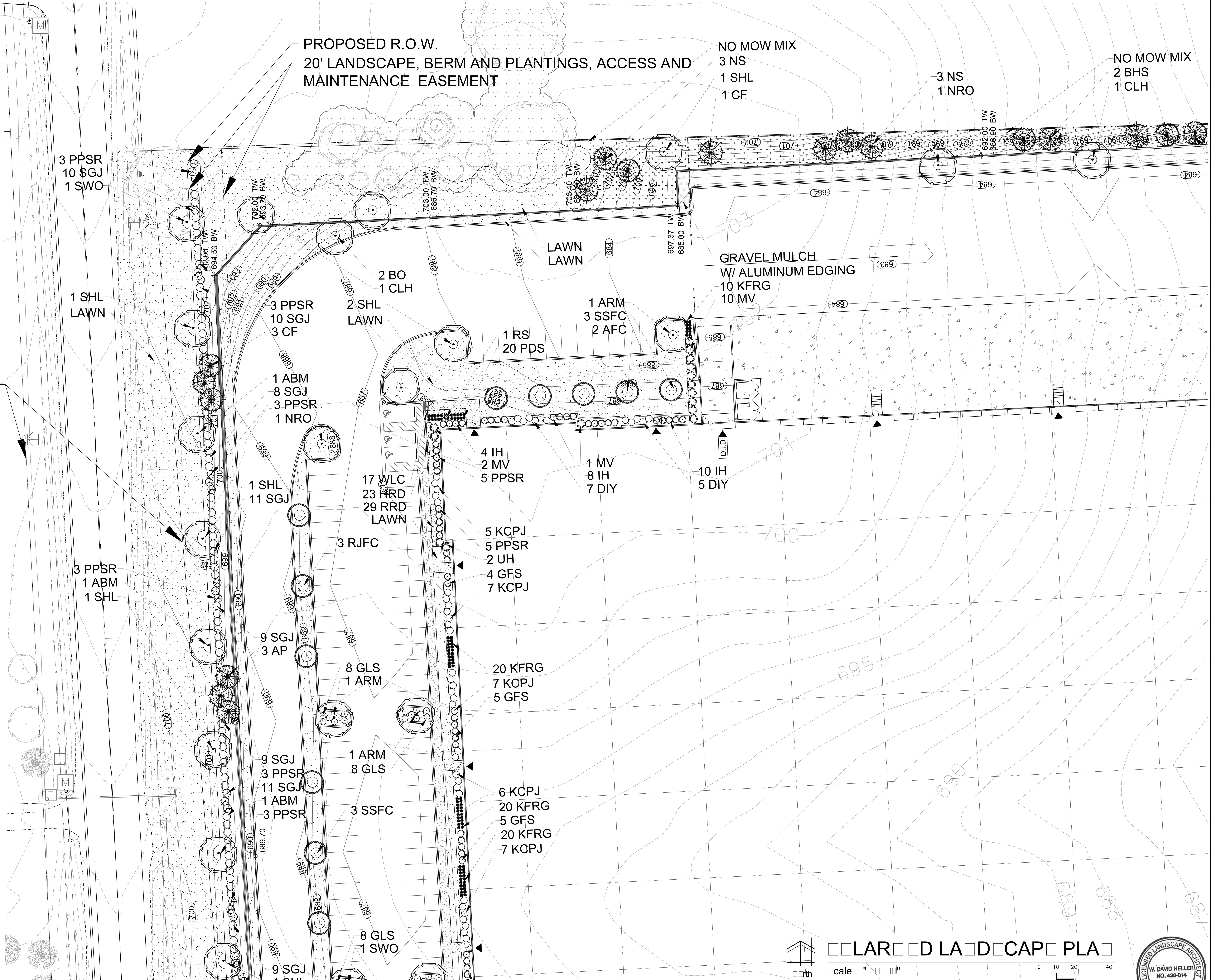

TO OBTAIN LOCATIONS OF PARTICIPANTS UNDERGROUND FACILITIES BEFORE YOU DIG IN WISCONSIN

DIGGERS HOTLINE

CALL DIGGERS HOTLINE
811 or 1-800-242-8511
MILW. AREA 259-1181
WIS STATUTE 182.0175(1974)
REQUIRES MIN. 3 WORK DAYS NOTICE BEFORE YOU EXCAVATE

HELLER & ASSOCIATES, LLC
LANDSCAPE ARCHITECTURE
One Redwood Court
Racine, Wisconsin 53402
ph 262.639.9733
fx 262.639.9737
david@wdavidheller.com

SHADE TREES (DECIDUOUS)

ARM	Armstrong Red Maple
ABM	Autumn Blaze Maple
GMSM	Green Mountain Sugar Maple
CLH	Chicagoland Hackberry
SHL	Skyline Honeylocust
KCT	Kentucky Coffee Tree
EL	Eastern Larch (Tamarack)
SWO	Swamp White Oak
BO	Bur Oak
NRO	Northern Red Oak
BC	Bald Cypress
BC	Bald Cypress
GSL	Greenspire Linden

ORNAMENTAL TREES (DECIDUOUS)

TCH	Thornless Cockspur Hawthorn
AFC	Adams Flowering Crabapple
RJFC	Red Jewel Flowering Crabapple
SSFC	Spring Snow Flowering Crabapple
IW	Ironwood
CFP	Chanticleer Flowering Pear

EVERGREEN TREES

CF	Concolor Fir
NS	Norway Spruce
NS	Norway Spruce
WS	White Spruce
BHS	Black Hills Spruce
BHS	Black Hills Spruce
CGS	Colorado Green Spruce
AP	Austrian Pine
AP	Austrian Pine

EVERGREEN SHRUBS

SGJ	Sea Green Juniper
KCPJ	Kallay Compact Pfitzer Juniper
DIY	Dense Intermediate Yew
TIY	Taunton Intermediate Yew

DECIDUOUS SHRUBS

IH	Incrediball Hydrangea
UH	Unique Hydrangea
GLS	Gro Low Fragrant Sumac
PPSR	Pink Pavement Series Rose
GFS	Goldflame Spirea
MV	Mohican Viburnum

ORNAMENTAL GRASSES

KFRG	Karl Foerster Feather Reed Grass
PDS	Prairie Dropseed

HERBACEOUS PERENNIALS

HRD	Happy Returns Daylilly
RRD	Rosy Returns Daylilly
WLC	Walker's Low Catmint
RS	Russian Sage

PLANT ABBREVIATION KEY

DRAFTED: #### DESIGNED: #### REVIEWED: ####

ENLARGED LANDSCAPE PLAN

Scale: 1" = 20'

North

0 10 20 40

LICENSED LANDSCAPE ARCHITECT W. DAVID HELLER NO. 438-014 STATE OF WISCONSIN

This Document, Either as Drawing or the Assemblage of Electronic Data, is the Property of Commerce Construction Co., L.P. ("Commerce"). This document, including all electronic data attached therein, may not be reproduced, distributed, modified, used or implemented in any way, in whole or in part, without the written consent of Commerce. This document shall not be taken as a document to be relied upon without warranty of any kind either expressed or implied. Commerce is not responsible for accuracy and completeness. Commerce is not responsible for edited or reproduced versions of digital data of this document. The acceptance or use of this document will be construed as an acceptance of the foregoing.

DATE | REVISION | ADDRESS / BILLING COMMENTS | DH | DATE

COMMERCE CONSTRUCTION CO., L.P.
City of Industry, California
Telephone
License

ENLARGED LANDSCAPE PLAN

MA… TIC … ROAD … LOGISTIC CENTER
PLEASANT PRAIRIE, WI

Drawing Plot Bar
Use this plot bar to confirm drawing has not been reduced or enlarged from original. If this plot bar is not exactly 1 inch long the physical size of drawing has changed.

DRAWN: DH DATE:

CCC

SHEET NO.

L…

TO OBTAIN LOCATIONS OF PARTICIPANTS UNDERGROUND FACILITIES BEFORE YOU DIG IN WISCONSIN

DIGGERS HOTLINE

CALL DIGGERS HOTLINE
811 or 1-800-242-8511
MILW. AREA 259-1181
WIS STATUTE 182.0175(1974)
REQUIRES MIN. 3 WORK DAYS
NOTICE BEFORE YOU EXCAVATE

HELLER & ASSOCIATES, LLC
LANDSCAPE ARCHITECTURE
One Redwood Court
Racine, Wisconsin 53402
ph 262.639.9733
fx 262.639.9737
david@wdavidheller.com

SHADE TREES (DECIDUOUS)

ARM	Armstrong Red Maple
ABM	Autumn Blaze Maple
GMSM	Green Mountain Sugar Maple
CLH	Chicagoland Hackberry
SHL	Skyline Honeylocust
KCT	Kentucky Coffee Tree
EL	Eastern Larch (Tamarack)
SWO	Swamp White Oak
BO	Bur Oak
NRO	Northern Red Oak
BC	Bald Cypress
BC	Bald Cypress
GSL	Greenspire Linden

ORNAMENTAL TREES (DECIDUOUS)

TCH	Thornless Cockspur Hawthorn
AFC	Adams Flowering Crabapple
RJFC	Red Jewel Flowering Crabapple
SSFC	Spring Snow Flowering Crabapple
IW	Ironwood
CFP	Chanticleer Flowering Pear

EVERGREEN TREES

CF	Concolor Fir
NS	Norway Spruce
NS	Norway Spruce
WS	White Spruce
BHS	Black Hills Spruce
BHS	Black Hills Spruce
CGS	Colorado Green Spruce
AP	Austrian Pine
AP	Austrian Pine

EVERGREEN SHURBS

SGJ	Sea Green Juniper
KCPJ	Kallay Compact Pfitzer Juniper
DIY	Dense Intermediate Yew
TIY	Taunton Intermediate Yew

DECIDUOUS SHRUBS

IH	Incrediball Hydrangea
UH	Unique Hydrangea
GLS	Gro Low Fragrant Sumac
PPSR	Pink Pavement Series Rose
GFS	Goldflame Spirea
MV	Mohican Viburnum

ORNAMENTAL GRASSES

KFRG	Karl Foerster Feather Reed Grass
PDS	Prairie Dropseed

HERBACEOUS PERENNIALS

HRD	Happy Returns Daylilly
RRD	Rosy Returns Daylilly
WLC	Walker's Low Catmint
RS	Russian Sage

PLANT ABBREVIATION KEY

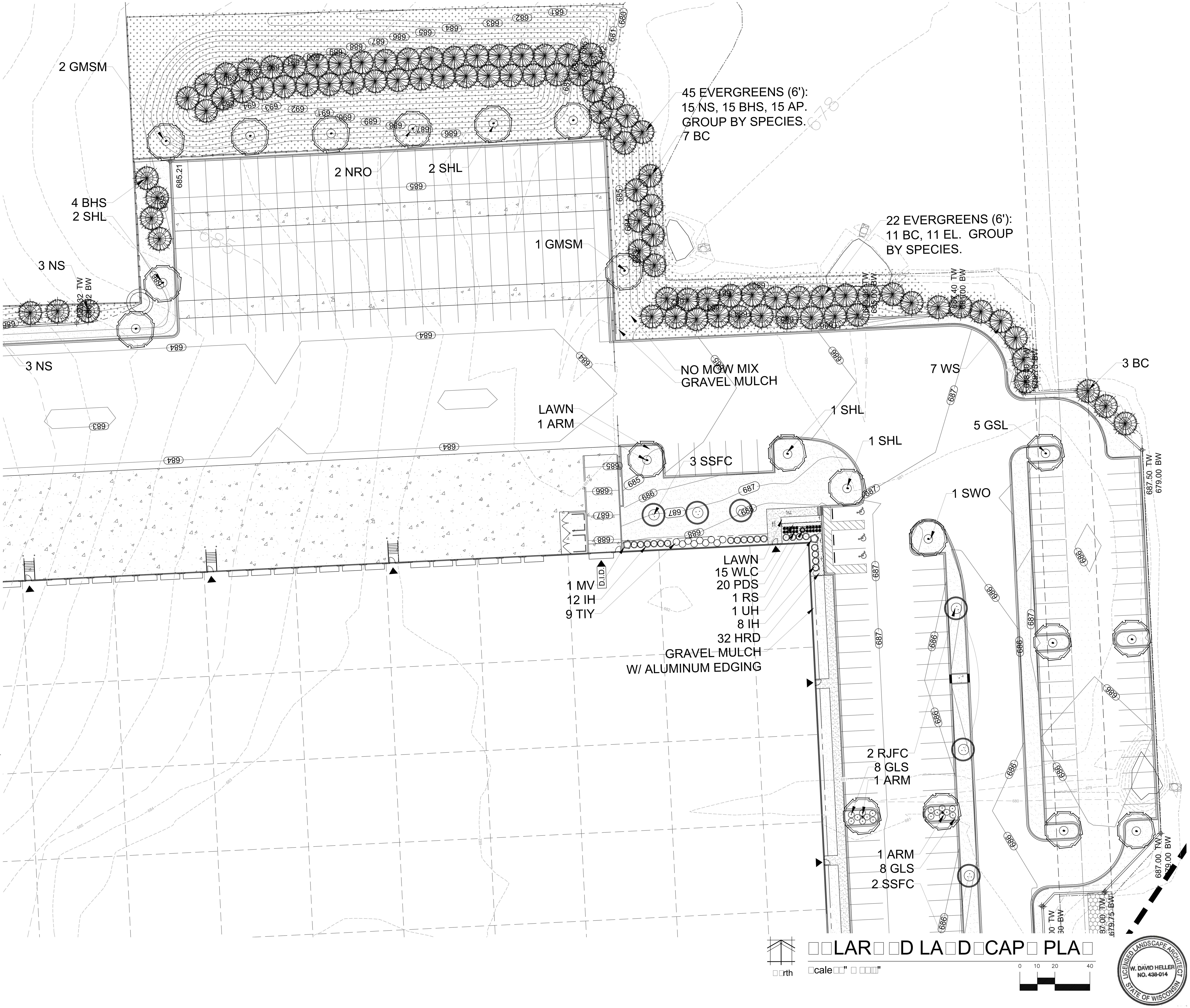

□□LAR□ □D LA□D□CAP□ PLA□

□cale□□" □ □□□"

0 10 20 40

LICENSED LANDSCAPE ARCHITECT W. DAVID HELLER NO. 438-014 STATE OF WISCONSIN

DRAFTED: ####
DESIGNED: ####
REVIEWED: ####

This Document, Either as Drawing or the Assemblage of Electronic Data, is the Property of Commerce Construction Co., L.P. ("Commerce"). Without the written consent of Commerce. ... without warranty of any kind either expressed or implied. ... and completeness. Commerce is not responsible for edited ... document. The acceptance or use of this document will ...

MA□□□TIC □AD□□R L□□I□TIC□ C□□T□R
PL□A□A□T PRARI□, □ I□C□□□I□

DRA□ □ □□ DAT□
□DH
CCC
□H□□T
L□□□

TO OBTAIN LOCATIONS OF PARTICIPANTS UNDERGROUND FACILITIES BEFORE YOU DIG IN WISCONSIN

DIGGERS HOTLINE

CALL DIGGERS HOTLINE
811 or 1-800-242-8511
MILW. AREA 259-1181
WIS STATUTE 182.0175(1974)
REQUIRES MIN. 3 WORK DAYS
NOTICE BEFORE YOU EXCAVATE

HELLER & ASSOCIATES, LLC
LANDSCAPE ARCHITECTURE

One Redwood Court
Racine, Wisconsin 53402
ph 262.639.9733
fx 262.639.9737
david@wdavidheller.com

SHADE TREES (DECIDUOUS)

ARM	Armstrong Red Maple
ABM	Autumn Blaze Maple
GMSM	Green Mountain Sugar Maple
CLH	Chicagoland Hackberry
SHL	Skyline Honeylocust
KCT	Kentucky Coffee Tree
EL	Eastern Larch (Tamarack)
SWO	Swamp White Oak
BO	Bur Oak
NRO	Northern Red Oak
BC	Bald Cypress
BC	Bald Cypress
GSL	Greenspire Linden

ORNAMENTAL TREES (DECIDUOUS)

TCH	Thornless Cockspur Hawthorn
AFC	Adams Flowering Crabapple
RJFC	Red Jewel Flowering Crabapple
SSFC	Spring Snow Flowering Crabapple
IW	Ironwood
CFP	Chanticleer Flowering Pear

EVERGREEN TREES

CF	Concolor Fir
NS	Norway Spruce
NS	Norway Spruce
WS	White Spruce
BHS	Black Hills Spruce
BHS	Black Hills Spruce
CGS	Colorado Green Spruce
AP	Austrian Pine
AP	Austrian Pine

EVERGREEN SHURBS

SGJ	Sea Green Juniper
KCPJ	Kallay Compact Pfitzer Juniper
DIY	Dense Intermediate Yew
TIY	Taunton Intermediate Yew

DECIDUOUS SHRUBS

IH	Incrediball Hydrangea
UH	Unique Hydrangea
GLS	Gro Low Fragrant Sumac
PPSR	Pink Pavement Series Rose
GFS	Goldflame Spirea
MV	Mohican Viburnum

ORNAMENTAL GRASSES

KFRG	Karl Foerster Feather Reed Grass
PDS	Prairie Dropseed

HERBACEOUS PERENNIALS

HRD	Happy Returns Daylilly
RRD	Rosy Returns Daylilly
WLC	Walker's Low Catmint
RS	Russian Sage

PLANT ABBREVIATION KEY

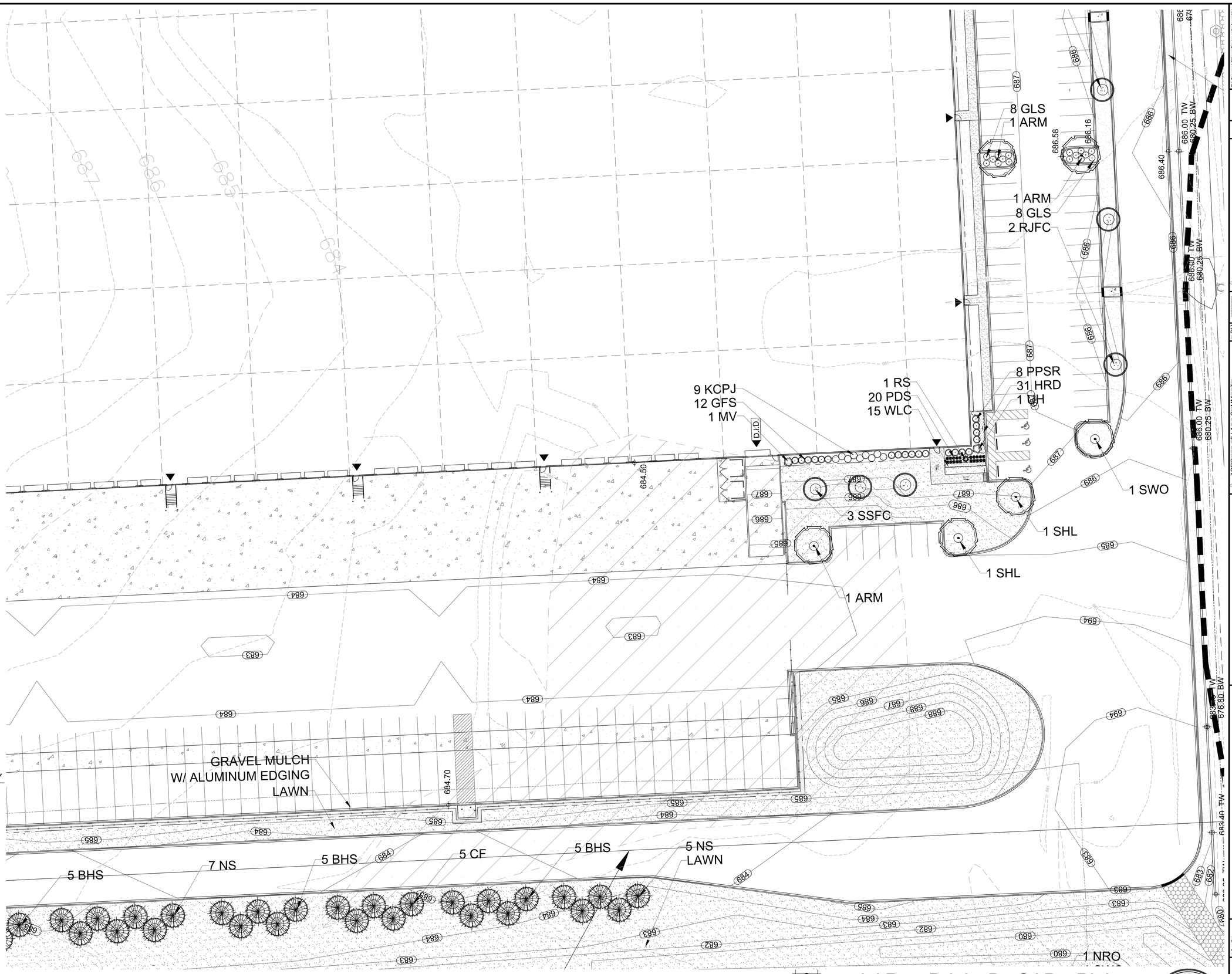

LANDSCAPE PLAN

Scale: 1" = 20'-0"

0 10 20 40

W. DAVID HELLER
NO. 438-014
LICENSED LANDSCAPE ARCHITECT
STATE OF WISCONSIN

This Document, Either in Drawing or the Assemblage of Specifications, Is Instrument of Construction Co., L.P. ("Consultant")

Drawing Number: Date: Revision Date: Drawn by: Checked by: Scale: 1" = 20'-0" Project Number: 0000 Sheet Number: L-1 Sheet Title: Landscape Plan

Consultant is the author of and owner of all rights in and to the Drawing, including but not limited to all copyrights, patent rights, trade secrets, and other proprietary rights, and all other rights of any kind, whether expressed or implied, except that Consultant grants to the Owner named in the Agreement between Consultant and such Owner ("Agreement") a limited, non-exclusive, non-transferable, non-sublicensable, non-assignable, revocable license to use the Drawing for the purpose of constructing, occupying, and maintaining the project that is the subject of the Agreement ("Project") in accordance with the Agreement, provided Consultant has been paid in full for its services in connection with the Project. The Drawing is not to be used for any other purpose or project without the express written consent of Consultant. Ownership of any tangible copies of the Drawing shall remain with Consultant. Owner shall have no right to sublicense, assign, or transfer the license granted herein without the express written consent of Consultant.

DATE
REVISION
DATE
DH
DATE
ADDRESS ILLA C MM
REVISION

C MM RC C TR CTI C L P
Cr rad Par a rth
Cal Indu Tri California
Tele ne
Licen e

MA TIC AD R L I TIC C T R
th TR T C T H
PL A T PRARI, C

Dra in Pl l ar
Date: 11 ar 1 chr dra in
ha n l een reduced r ectar ad
ac ordinal l the 11 ar l n n
ead ub ub l the ch ical ta
dra in ha chan ed

DRA DAT
DH

CCC

H T

L

REVIEWED: ####
DESIGNED: ####
DRAFTED: ####

Stormwater Seed Mix
For Use on Stormwater Management Ponds (SMP) side slopes to Normal Water Line (NWL)

Botanical Name	Common Name	PLS Ounces/Acre
Permanent Grasses/Sedges/Rushes:		
Carex cristatella	Crested Oval Sedge	1.00
Carex frankii	Bristly Cattail Sedge	1.00
Carex lurida	Bottlebrush Sedge	2.00
Carex sparganioidex v. cephaloidea	Rough-Clustered Sedge	2.00
Carex vulpinoidea	Brown Fox Sedge	6.00
Eleocharis ovata	Blunt Spike Rush	0.50
Elymus virginicus	Virginia Wild Rye	12.00
Glyceria striata	Fowl Manna Grass	1.25
Juncus effusus	Common Rush	1.00
Juncus torreyi	Torrey's Rush	0.25
Leersia oryzoides	Rice Cut Grass	1.00
Panicum virgatum	Switch Grass	2.00
Scirpus atrovirens	Dark Green Rush	1.00
Scirpus cyperinus	Wool Grass	0.50
Scirpus fluviatilis	River Bulrush	0.25
Scirpus validus	Great Bulrush	6.00
	Total	**45.75**
Temporary Cover:		
Avena sativa	Common Oat	360.00
Lolium multiflorum	Annual Rye	116.00
	Total	**476.00**
Forbs:		
Alisma spp.	Water Plantain (Various Mix)	4.25
Asclepias incarnata	Swamp Milkweed	1.50
Bidens spp.	Bidens (Various Mix)	2.00
Helenium autumnale	Sneezeweed	3.00
Mimulus ringens	Monkey Flower	1.00
Penthorum sedoides	Ditch Stonecrop	0.50
Polygonum pensylvanicum	Pinkweed	4.00
Rudbeckia subtomentosa	Sweet Black-Eyed Susan	1.00
Sagittaria latifolia	Broad-Leaf Arrowhead	1.00
Senna hebecarpa	Wild Senna	1.00
Thalictrum dasycarpum	Purple Meadow Rue	2.00
	Total	**21.25**

□T□RM□ AT□R □□□D MI□

PLANT KEY	QUANTITY	BOTANICAL NAME	COMMON NAME	SIZE	ROOT	SPECIFICATION / NOTES
Proposed Landscape Materials						
SHADE TREES (DECIDUOUS)				CALIPER SIZE		
ARM	10	Acer xfreemanii 'Armstrong'	Armstrong Red Maple	2.5"	B&B	Straight central leader, full and even crown. Prune only after planting
ABM	13	Acer xfreemanii 'Autumn Blaze'	Autumn Blaze Maple	2.5"	B&B	Straight central leader, full and even crown. Prune only after planting
GMSM	3	Acer saccharum 'Green Mountain'	Green Mountain Sugar Maple	2.5"	B&B	Straight central leader, full and even crown. Prune only after planting
CLH	2	Celtis occidentalis 'Chicagoland'	Chicagoland Hackberry	2.5"	B&B	Straight central leader, full and even crown. Prune only after planting
SHL	22	Gleditsia triacanthos 'Skyline'	Skyline Honeylocust	2.5"	B&B	Straight central leader, full and even crown. Prune only after planting
KCT	1	Gymnocladus dioica	Kentucky Coffee Tree	2.5"	B&B	Straight central leader, full and even crown. Prune only after planting
EL	11	Larix laricina	Eastern Larch (Tamarack)	6.0'	B&B	Straight central leader, full and even crown. Prune only after planting
SWO	10	Quercus bicolor	Swamp White Oak	2.5"	B&B	Straight central leader, full and even crown. Prune only after planting
BO	5	Quercus macrocarpa	Bur Oak	2.5"	B&B	Straight central leader, full and even crown. Prune only after planting
NRO	7	Quercus rubra	Northern Red Oak	2.5"	B&B	Straight central leader, full and even crown. Prune only after planting
BC	16	Taxodium distichum	Bald Cypress	2.5"	B&B	Straight central leader, full and even crown. Prune only after planting
BC	11	Taxodium distichum	Bald Cypress	6.0'	B&B	Well balanced multi-stemmed tree with minimum four canes, and full appearance
GSL	9	Tilia cordata 'Greenspire'	Greenspire Linden	2.5"	B&B	Straight central leader, full and even crown. Prune only after planting
ORNAMENTAL TREES (DECIDUOUS)				CALIPER SIZE		
TCH	5	Crataegus crus-galli 'Inermis'	Thornless Cockspur Hawthorn	7-8'	B&B	Well balanced multi-stemmed tree with minimum four canes, and full appearance
AFC	4	Malus x 'Adams'	Adams Flowering Crabapple	7-8' H	B&B	Well balanced multi-stemmed tree with minimum four canes, and full appearance
RJFC	10	Malus x 'Jewelcole'	Red Jewel Flowering Crabapple	7-8' H	B&B	Well balanced multi-stemmed tree with minimum four canes, and full appearance
SSFC	17	Malus x 'Spring Snow'	Spring Snow Flowering Crabapple	7-8' H	B&B	Well balanced multi-stemmed tree with minimum four canes, and full appearance
IW	3	Ostrya virginiana	Ironwood	2.5-3" DBH	B&B	Well balanced multi-stemmed tree with minimum four canes, and full appearance
CFP	1	Pyrus calleryana 'Chanticleer'	Chanticleer Flowering Pear	2.5"	B&B	Straight central leader, full and even crown. Prune only after planting
EVERGREEN TREES				CALIPER SIZE		
CF	21	Abies concolor	Concolor Fir	7-8'	B&B	Evenly shaped tree with branching to the ground
NS	38	Picea abies	Norway Spruce	7-8'	B&B	Evenly shaped tree with branching to the ground
NS	15	Picea abies	Norway Spruce	6'	B&B	Evenly shaped tree with branching to the ground
WS	7	Picea densata	White Spruce	7-8'	B&B	Evenly shaped tree with branching to the ground
BHS	47	Picea densata 'glauca'	Black Hills Spruce	7-8'	B&B	Evenly shaped tree with branching to the ground
BHS	15	Picea densata 'glauca'	Black Hills Spruce	6'	B&B	Evenly shaped tree with branching to the ground
CGS	3	Picea pungens	Colorado Green Spruce	7-8'	B&B	Evenly shaped tree with branching to the ground
AP	3	Pinus nigra var. Austriana	Austrian Pine	7-8'	B&B	Evenly shaped tree with branching to the ground
AP	15	Pinus nigra var. Austriana	Austrian Pine	6'	B&B	Evenly shaped tree with branching to the ground
EVERGREEN SHURBS				SHRUB SIZE	ROOT/ CONT.	
SGJ	123	Juniperus chinensis 'Sea Green'	Sea Green Juniper	#5	Cont.	Full rounded well branched shrub
KCPJ	67	Juniperus chinensis 'Kallay'	Kallay Compact Pfitzer Juniper	#5	Cont.	Full rounded well branched shrub
DIY	12	Taxus xmedia 'Densiformis'	Dense Intermediate Yew	24"	B&B	Full rounded well branched shrub
TIY	9	Taxus xmedia 'Tautoni'	Taunton Intermediate Yew	24"	B&B	Full rounded well branched shrub
DECIDUOUS SHRUBS				SHRUB SIZE	ROOT/ CONT.	
IH	42	Hydrangea arborescens 'Abetwo'	Incrediball Hydrangea	#5	Cont.	Full, well rooted plant, evenly shaped
UH	8	Hydrangea paniculata 'Unique'	Unique Hydrangea	#5	Cont.	Full, well rooted plant, evenly shaped
GLS	64	Rhus aromatica 'Gro-Low'	Gro Low Fragrant Sumac	#5	Cont.	Full, well rooted plant, evenly shaped
PPSR	72	Rosa rugosa 'Pink Pavement'	Pink Pavement Series Rose	18"	Cont.	Full, well rooted plant, evenly shaped
GFS	52	Spirea xbumalda 'Goldflame'	Goldflame Spirea	24"	Cont.	Full, well rooted plant, evenly shaped
MV	25	Viburnum lantana 'Mohican'	Mohican Viburnum	42"	B&B	Full, well rounded plant with moist rootball and healthy appearance
ORNAMENTAL GRASSES				CONTAINER SIZE		
KFRG	100	Calamagrostis acutiflora 'Karl Foerster'	Karl Foerster Feather Reed Grass	#1	Cont.	Full, well rooted plant
PDS	80	Sporobolus heterolepis	Prairie Dropseed	#1	Cont.	Full, well rooted plant
HERBACEOUS PERENNIALS				CONTAINER SIZE		
HRD	109	Hemerocallis 'Happy Returns'	Happy Returns Daylilly	#1	Cont.	Full, well rooted plant, evenly shaped
RRD	58	Hemerocallis 'Rosy Returns'	Rosy Returns Daylilly	#1	Cont.	Full, well rooted plant, evenly shaped
WLC	64	Nepeta faassenii 'Walker's Low'	Walker's Low Catmint	#1	Cont.	Full, well rooted plant, evenly shaped
RS	4	Perovskia atriplicifolia	Russian Sage	#2	Cont.	Full, well rooted plant, evenly shaped
LAWN	29350	Lawn Establishment Area	*Approx. 263,950 SF*		SY	Cedar Creek Premium Blue Tag Seed Mix (Ph: 888-313-6807)
NO MOW	3435	Native Prairie Establishment Area	*Approx. 30,950 SF*		SY	
STRMWTR	3200	Stormwater Establishment Area	*Approx. 28,800 SF*		SY	
MATT	323654	Erosion Matting for sloped seeded areas	*see plan for area delineation*		SF	EroTex DS75 Erosion Control Blanket (or approved equal)
Hardscape Materials						
	55	Heritage River Gravel Mulch (1.0-1.5" pieces)	*Approx. 5,740 SF*		TN	*2" depth*
	1650	Aluminum Edge Restraint (gravel areas)	Permaloc ProSlide 3/16"x5.5" Black Duraflex Finish		LF	
	5740	Landscape Fabric	*Approx. 5,740 SF*		SF	
	210	Shredded Hardwood Mulch (3" depth)	*Approx. 22,335 SF*		CY	Bark Mulch; apply Preemergent after installation of mulch
	140	Soil Amendments (2" depth)	*Approx. 22,335 SF*		CY	
	440	Pulverized Topsoil (Lawn Area)	*Approx. 326,510 SF*		CY	
	140	Pulverized Topsoil (2" over bed areas)	*Approx. 22,335 SF*		CY	

*Landscape counts & quantities are provided as a service to the Landscape Contractor; Landscape Contractor is responsible for verifying these counts and quantities in order to provide a complete landscape installation as outlined on this Landscape Master Plan. In the event that a discrepancy occurs between this schedule and the Landscape Master Plan, the Landscape Master Plan- including the graphics and notations depicted therein- shall govern.

Seed Compositions:

Cedar Creek Premium Blue Tag (Ph: 888-313-6807): — Seed at rate of 3# per 1000 SF

- 10% Mid Atlantic Kentucky Bluegrass
- 20% Merit Kentucky Bluegrass
- 20% Boreal Red Fescue
- 20% Pennant Fine Perennial Ryegrass
- 10% Atlantis Kentucky Bluegrass
- 10% Dragon Kentucky Bluegrass
- 10% Palmer III Fine Perennial Ryegrass

Cedar Creek Low-Grow-No-Mow Meadow Mix (Ph: 888-313-6807): — Seed at rate of 1/2-1 # per 1000 SF

- 10% Kentucky Bluegrass 98/95
- 30% Boreal Red Fescue BT
- 20% Pennant II Fine Rye BT
- 20% Ambrose Chewing Fescue
- 20% Warwick Hard Fescue

LA□D□CAP□ MAT□RIAL □CH□D□L□

1. Contractor responsible for contacting Diggers Hotline (811 or 800-242-8511) to have site marked prior to excavation or planting.

2. Contractor to verify all plant quantities shown on Plant & Material List and landscape planting symbols and report any discrepancies to Landscape Architect or General Contractor.

3. All plantings shall comply with standards as described in American Standard of Nursery Stock - Z60.1 ANSI (latest version). Landscape Architect reserves the right to inspect, and potentially reject any plants that are inferior, compromised, undersized, diseased, improperly transported, installed incorrectly or damaged. No sub-standard "B Grade" or "Park Grade" plant material shall be accepted. Plant material shall originate from nursery(ies) with a similar climate as the planting site.

4. Any potential plant substitutions must be approved by Landscape Architect or Owner. All plants must be installed as per sizes indicated on Plant & Material Schedule, unless approved by Landscape Architect. Any changes to sizes shown on plan must be submitted in writing to the Landscape Architect prior to installation.

5. Topspoil in Parking Lot Islands (if applicable): All parking lot islands to be backfilled with topsoil to a minimum depth of 18" to insure long-term plant health. Topsoil should be placed within 3" of finish grade by General Contractor / Excavation Contractor during rough grading operations/activity. The landscape contractor shall be responsible for the fine grading of all disturbed areas, planting bed areas, and lawn areas. Crown all parking lot islands a minimum of 6" to provide proper drainage, unless otherwise specified.

6. Tree Planting: Plant all trees slightly higher than finished grade at the root flare. Remove excess soil from the top of the root ball, if needed. Remove and discard non-biodegradable ball wrapping and support wire. Removed biodegradable burlap and wire cage (if present) from the top $\frac{1}{3}$ of the rootball and carefully bend remaining wire down to the bottom of the hole. Once the tree has been placed into the hole and will no longer be moved, score the remaining $\frac{2}{3}$ of the burlap and remove the twine. Provide three slow release fertilizer for each tree planted.

7. Tree Planting: Backfill tree planting holes 80% existing soils removed from excavation and 20% plant starter mix. Avoid air pockets and do not tamp soil down. Discard any gravel, rocks, heavy clay, or concrete pieces. When hole is $\frac{2}{3}$ full, trees shall be watered thoroughly, and water left to soak in before proceeding to fill the remainder of the hole. Water again to full soak in the new planting. Each tree shall receive a 3" deep, 4-5' diameter (see planting details or planting plan) shredded hardwood bark mulch ring around all trees planted in lawn areas. Do not build up any mulch onto the trunk of any tree. Trees that are installed incorrectly will be replaced at the time and expense of the Landscape Contractor.

8. Shrub Planting: All shrubs to be planted in groupings as indicated on the Landscape Plan. Install with the planting of shrubs a $^{50}/_{50}$ mix of plant starter with topsoil. Install topsoil into all plant beds as needed to achieve proper grade and displace undesirable soil (see planting detail). Remove all excessive gravel, clay and stones from plant beds prior to planting. When hole(s) are $\frac{2}{3}$ full, shrubs shall be watered thoroughly, and water left to soak in before proceeding. Provide slow-release fertilizer packets at the rater of 1 per 24" height/diamter of shrub at planting.

9. Mulching: All tree and shrub planting beds to receive a 3" deep layer of high quality shredded hardwood bark mulch (not pigment dyed or enviro-mulch). All perennial planting areas (groupings) shall receive a 2" layer of shredded hardwood bark mulch, and groundcover areas a 1-2" layer of the same mulch. Do not mulch annual flower beds (if applicable). Do not allow mulch to contact plant stems and tree trunks.

10. Edging: All planting beds shall be edged with a 4" deep spade edge using a flat landscape spade or a mechanical edger. Bedlines are to be cut crisp, smooth as per plan. A clean definition between landscape beds and lawn is required. Pack mulch against lawn edge to hold in place.

11. Plant bed preparation/Soil Amendment composition: All perennial, groundcover and annual areas (if applicable) are required to receive a blend of organic soil (Soil Amendments) amendments prior to installation. Roto-till the following materials at the following ratio, into existing soil beds or installed topsoil beds to a depth of approximately 8"-10". Containerized and balled & burlapped plant material should be back-filled with amended soil:

Per 100 SF of bed area (Soil Amendment composition):
$\frac{3}{4}$ CY Peat Moss or Mushroom Compost
$\frac{3}{4}$ CY blended/pulverized Topsoil
$\frac{1}{4}$ CY composted manure

In roto-tilled beds only, also include in above mixture:
2 lbs Starter Fertilizer

12. Lawn Installation for all sodded turfgrass areas: Contractor to furnish and prepare blended topsoil (2" minimum) and sod bed, removing all debris and stones $\frac{1}{2}$" and larger. Apply a 10-10-10 starter lawn fertilizer uniformly throughout areas prior to laying sod. Use only premium sod blend according to TPI (revised 1995) and ASPA Standards. Install sod uniformly with staggered joints, laid tightly end to end and side to side. Roll sod with a walk behind roller and water immediately upon installation to a 3" depth. Stake any sod installed on slopes steeper than 1:3, and in all swale applications. Contractor is responsible to provide a smooth, uniform, healthy turf, and is responsible for the first two mowings of the newly installed turf, and is also responsible for watering during this period.

13. Installation preparation for all seeded areas: remove/kill off any existing unwanted vegetation prior to seeding. Prepare the topsoil (if adequate or provide as in item #6 above) and seed bed by removing all surface stones 1" or larger. Apply a starter fertilizer and specified seed uniformly at the specified rate, and provide mulch covering suitable to germinate and establish turf. Provide seed and fertilizer specifications to Landscape Architect and Owner prior to installation. Erosion control measures are to be used in swales and on slopes in excess of 1:3 and where applicable (see Civil Engineering Drawings). Methods of installation may vary are the discretion of the Landscape Contractor on his/her responsibility to establish and guarantee a smooth, uniform, quality turf. A minimum of 2" of blended, prepared and non-compacted topsoil is required for all lawn areas. If straw mulch is used as a mulch covering, a tackifier may be necessary to avoid wind dispersal of mulch covering. Marsh hay containing reed canary grass is NOT acceptable as a mulch covering.

An acceptable quality seed installation is defined as having:
No bare spots larger than one (1) square foot
No more than 10% of the total area with bare areas larger than one (1) square foot
A uniform coverage through all turf areas

14. No-Mow seed areas: "No-Mow" fine fescue seed mix with annual rye nurse crop (available at Cedar Creek Seed Farm 888-313-6807; or Prairie Nursery 608-296-3679) or approved equivalent mix from a reputable seed mix provider. Apply at 220 lbs per acre or at rate recommended by supplier. Prepare seed bed and soil as specified in item #13 above.

15. Native Prairie Seed Mix / Stormwater Seed Mix: Native seed mixes as listed on the Plant and Material List or other seeding schedules outlined on the landscape plan set. Seed mixes available from Prairie Nursery 608-296-3679 or JF New 608-848-1789 or approved equivalent mix from a reputable seed mix provider. Apply at rates specified herein, or per supplier recommendation. Prepare soil and seed bed as in item #13 above.

16. Warranty and Replacements: All plantings are to be watered thoroughly at the time of planting, through construction and upon completion of project as required. Trees, Evergreens, and Shrubs (deciduous and evergreen) shall be guaranteed (100% replacement) for a minimum of one (1) year from the date of project completion. Perennials, groundcovers, and ornamental grasses shall be guaranteed for a minimum of one (1) growing season. Perennials, groundcovers, and ornamental grasses planted after September 15th shall be guaranteed through May 31st of the following year. Only one replacement per plant will be required during the warranty period, except for losses or replacements due to failure to comply with specified requirements. Watering and general ongoing maintenance instructions are to be supplied by the Landscape Contractor to the Owner upon completion of the project.

17. The Landscape Contractor is responsible for the watering and maintenance of all landscape areas for a period of 45 days after the substantial completion of the landscape installation. This shall include all trees, shrubs, evergreens, perennials, ornamental grasses, turf grass, no-mow grass, and native prairie seed mix / stormwater seed mix. Work also includes weeding, edging, mulching (only if required), fertilizing, trimming, sweeping up grass clippings, pruning and deadheading.

18. Project Completion: Landscape Contractor is responsible to conduct a final review of the project, upon completion, with the Landscape Architect, Client or Owner / Client Representative, and the General Contractor to answer questions, provide written care instructions for new plantings and turf, and insure that all specifications have been met.

LA□D□CAP□ □□□□RAL □□T□□

TO OBTAIN LOCATIONS OF PARTICIPANTS UNDERGROUND FACILITIES BEFORE YOU DIG IN WISCONSIN
DIGGERS HOTLINE
CALL DIGGERS HOTLINE
811 or 1-800-242-8511
MILW. AREA 259-1181
WIS STATUTE 182.0175(1974)
REQUIRES MIN. 3 WORK DAYS NOTICE BEFORE YOU EXCAVATE

HELLER & ASSOCIATES, LLC
LANDSCAPE ARCHITECTURE
One Redwood Court
Racine, Wisconsin 53402
ph 262.639.9733
fx 262.639.9737
david@wdavidheller.com

LICENSED LANDSCAPE ARCHITECT
W. DAVID HELLER
NO. 438-014
STATE OF WISCONSIN

DRAFTED: ####
DESIGNED: ####
REVIEWED: ####

This Document, Either as Drawing or the Assemblage of Electronic Data, is the Property of Commerce Construction Co., L.P. ("Commerce"). Th□ d□cu□ent, includin□ all electr□nic data attached therein, □a□n□t □e re□r□duced, di□tri□uted, □□dified, u□ed □r i□□le□ented in an□ □a□, in □h□le □r in □art, without the written consent of Commerce. This document □hall n□t □e an □a□□urtenant □□ a□□□ciated □ith, □r a□ a re□□lace□ent □r the □□eali□□eated d□cu□ent, and is without warranty of any kind either expressed or implied. An□ □er□□n □r □r□ani□ati□n □a□in□ u□e □□□r rel□in□ u□□n thi□ d□cu□ent i□ re□□n□i□le □r c□n□ir□in□ it□ accurac□ and completeness. Commerce is not responsible for edited □r re□r□duced □er□i□n□ □□ di□ital data □□□ thi□ document. The acceptance or use of this document will □e c□n□trued a□ an acce□tance □□ the □re□□in□.

DAT□ | □□ | R□□I□I□□□ | DAT□ | □□ | □DH | ADDR□□□ □ILLA□□ C□MM□□T□ | R□□I□I□□□

C□MM□RC□ C□□□TR□CTI□□ C□, L.P□
□□□□□ Cr□□r□ad□ Par□□a□□rth
□i□th □l□□r
Cit□ □□Indu□tr□, Cali□rnia □□□□□□□□□
Tele□h□ne □□□□□□□□□□□□
Licen□e □□□□□□□□□

LA□D□CAP□ □□T□□ □ □CH□D□L□□
MA□□□TIC □AD□□R L□□I□TIC□ C□□T□R
□□th □TR□□T □C□TH□"□"
PL□A□A□T PRARI□, □ I□C□□□I□

Dra□in□ Pl□t □ar
□□e thi□ □□t □ar t□ c□n□ir□ dra□in□ ha□ n□t □een reduced □r enlar□ed □r□□ □ri□inal□ I□ thi□ □□t □ar i□ n□t e□actl□ □ inch l□n□ the □h□□ical □i□e □□dra□in□ ha□ chan□ed□

DRA□ □ □□ DAT□
□DH □□□□□□□□□□
CCC □□□ □□□
□□□□□□
□H□□T □□□
L□□□

DRAFTED: #### DESIGNED: #### REVIEWED: ####

Luminaire Schedule

Symbol	Label	Quantity	Manufacturer	Catalog Number	Description	Lamp	Number Lamps	Filename	Lumens Per Lamp	Light Loss Factor	Wattage
	OA	18	Lithonia Lighting	TYA 1000S TA	SPECIFICATION FLOODLIGHT, TA, DISTRIBUTIONS, 1000W HPS, W/ CLEAR LAMP,	ONE 1000WATT CLEAR E-25 HIGH PRESSURE SODIUM, HORIZONTAL POSITION	1	TYA_1000S_TA.ies	140000	0.9	1100
	OB	20	Lithonia Lighting	TWL 705	GENERAL PURPOSE LINEAL WALLPACK WITH RESISTANT POLYCARBONATE REFRACTOR	ONE 70WATT ED-17 HIGH PRESSURE SODIUM, POSTIONAL-SEE-UP	1	TWL_705.ies	6300	0.8	94
	OC	10	Lithonia Lighting	KSF2 400S R3	Specification Area Luminaire, 400W High Pressure Sodium, R3 Reflector, HORIZONTAL POSITION, "NIGHTTIME FRIENDLY" CRITERIA	ONE 400WATT CLEAR ET-18 HIGH PRESSURE SODIUM, HORIZONTAL POSITION	1	KSF2_400S_R3.ies	50000	0.8	468
	OD	16	Lithonia Lighting	KSF2 400S R2	Specification Area Luminaire, 400W High Pressure Sodium, R2 Reflector, HORIZONTAL POSITION, "NIGHTTIME FRIENDLY" CRITERIA	ONE 400WATT CLEAR ET-18 HIGH PRESSURE SODIUM, HORIZONTAL POSITION	1	KSF2_400S_R2.ies	50000	0.8	468
	OE	0	PHILIPS GARDCO	EH15HA400HPS	FORM 15 SQUARE	CLEAR HORIZONTAL LUMENS RATED FOR 50000	1	EH15HA400H.IES	50000	0.8	465
	OE2	8	PHILIPS GARDCO	EH15HP4400HPS	FORM 15 SQUARE	CLEAR HORIZONTAL LUMENS RATED FOR 50000	1	EH15HP4400H.IES	50000	0.8	930
	A	2	Lithonia Lighting	KSF2 400S R2	Specification Area Luminaire, 400W High Pressure Sodium, R2 Reflector, HORIZONTAL POSITION, "NIGHTTIME FRIENDLY" CRITERIA	ONE 400WATT CLEAR ET-18 HIGH PRESSURE SODIUM, HORIZONTAL POSITION	1	KSF2_400S_R2.ies	50000	0.8	936

Statistics

Description	Symbol	Avg	Max	Min	Max/Min	Avg/Min
Calc Zone #3	+	1.2 fc	23.6 fc	0.0 fc	N/A	N/A
Site Zone #1	×	3.4 fc	23.6 fc	0.2 fc	118.0:1	17.0:1

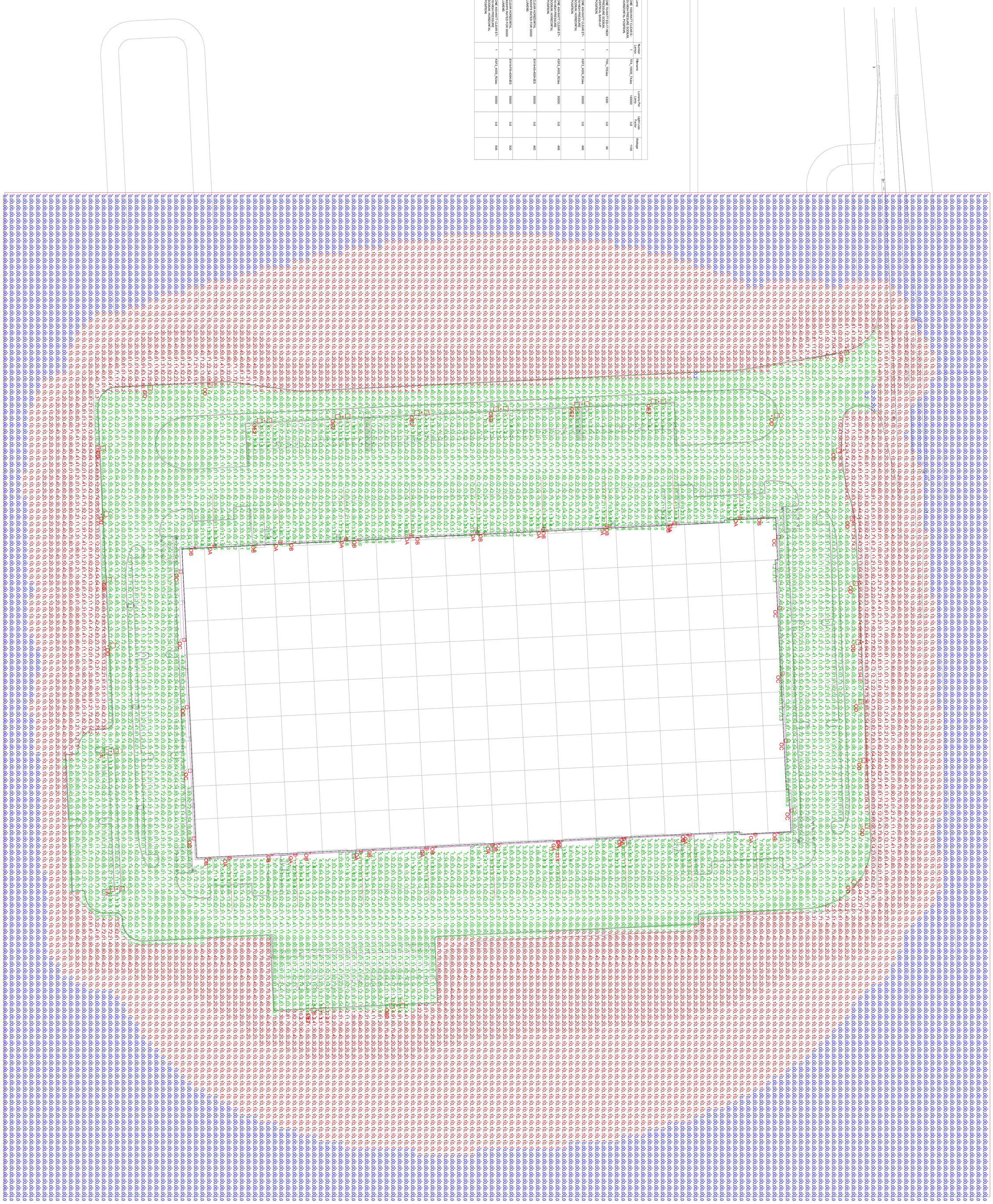

SHEET NO. EP-1

CCC JOB NO.

DRAWN BY DATE

Drawing Plot Bar
0" 1"
Use this plot bar to confirm drawing has not been reduced or enlarged from original. If this plot bar is not 1" inch, then physical size of drawing has changed

COMMERCE CONSTRUCTION CO., L.P.
13191 Crossroads Parkway North
Sixth Floor
City of Industry, California 91746-3497
Telephone: (562) 699-0453

License No. 723302

REVISIONS	BY	DATE	REVISIONS	BY	DATE

This Document, Either as Drawing or the Assemblage of Electronic Data, is the Property of Commerce Construction Co., L.P. ("Commerce")
This document, including all electronic data attached therein, may not be reproduced, distributed, modified, used or implemented in any way, in whole or in part, without the written consent of Commerce. This document shall not be taken as appurtenant to, associated with, or as a replacement for the officially sealed document, and is without warranty of any kind either expressed or implied. Any person or organization making use of or relying upon this document is responsible for confirming its accuracy and completeness. Commerce is not responsible for edited or reproduced versions of digital data from this document. The acceptance or use of this document will be construed as an acceptance of the foregoing.

4/25/2016 6:28:21 PM

COUNTY MATERIALS CORPORATION

Integrity™ Retaining Wall System

Integrity™ Retaining Wall System

INTEGRITY™
retaining wall system

Stability and Durability Combine for a High Performing Wall System

When it comes to achieving multi-level terraces, slope protection, or other impressive retaining wall elements, the Integrity™ Retaining Wall System is ideally suited for challenging applications.

The size and scale of Integrity Retaining Wall units make a bold and dramatic statement in larger outdoor spaces. With their built-in setback design, units offer efficient installation and provide a structurally sound, highly stable retaining wall.

Manufactured with high-density concrete, Integrity Retaining Wall units are also incredibly durable to resist frost and de-icing salts, and they are crafted with colorfast pigments to maintain their natural beauty year after year.

Integrity units are designed to install simply; filling their cores with aggregates provides extra stability and durability during construction. Manufactured with a natural looking splitface or weathered Rustic texture, and available in stunning color options from solid to blended mixes, the Integrity Retaining Wall System is an attractive and dependable solution for a wide range of landscaping applications.

Hush

Color & Size Selection

Blended Colors	Blended Rustic Colors	Blended Heavy Rustic Colors
Haven	Haven-Rustic	Haven-Heavy Rustic
Hush	Hush-Rustic	Hush-Heavy Rustic
Serenity	Serenity-Rustic	Serenity-Heavy Rustic
Timeless	Timeless-Rustic	Timeless-Heavy Rustic

Solid Colors	Solid Rustic Colors	Solid Heavy Rustic Colors
Buff	Buff-Rustic	Buff-Heavy Rustic
Gray	Gray-Rustic	Gray-Heavy Rustic

Integrity Retaining Wall Units- Splitface

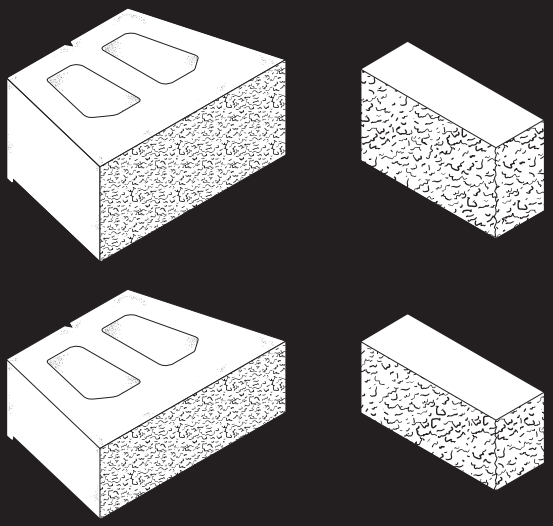

Integrity Retaining Wall Units- Rustic

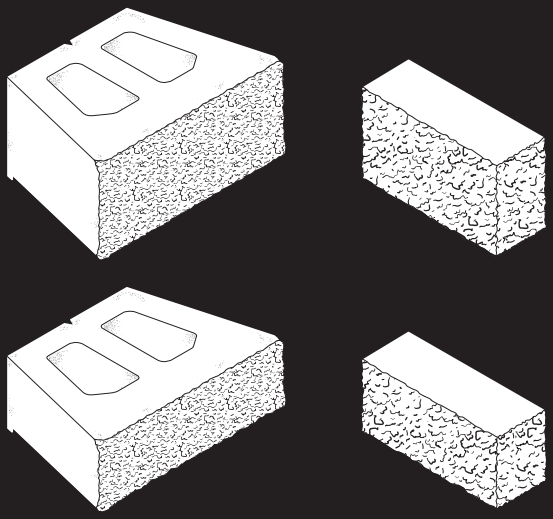

Product	Size D x H x L (inches and mm)	SF/ Unit	Units/ Pallet	Lbs./ Unit	Lbs./ Pallet
Integrity Standard Splitface or Rustic	12 x 8 x 18 305 x 203 x 457	1	24	82	1965
Integrity Junior Splitface or Rustic	12 x 6 x 18 305 x 152 x 457	.75	32	63	2060
Integrity Standard Corner Splitface or Rustic	3⁵/₈ x 8 x 12 92 x 203 x 305	.67	60	27	1665
Integrity Junior Corner Splitface or Rustic	3⁵/₈ x 6 x 12 92 x 152 x 305	.5	60	20	1260

Colors shown may vary from actual hues and should only be used as a guide. Refer to actual product samples for final color selection. Because concrete units are manufactured with high quality, naturally-mined aggregates and materials, variations in color or shading should be expected in products that are manufactured at different times and in units having different shapes. This color or shading variation is acceptable in the industry.

Caution: Deicing products may be harmful to concrete surfaces and concrete products, especially when used in excess. Sand is recommended to be used for slip resistance.

Integrity™ Retaining Wall System

Applications:

- *Raised Patios*
- *Garden Walls*
- *Planting Beds*
- *Fencing/Barriers*
- *Raised Parking Areas*
- *Steps*
- *Pillars*
- *Front Entrances*
- *Borders & Edging*
- *Amphitheaters*
- *Embankment Supports*
- *Multi-level Terraces*
- *Erosion Control*

Hush

Hush

Distributed by:

COUNTY MATERIALS CORPORATION

(800) 289-2569

www.countymaterials.com

Integrity™ Retaining Wall System is a trademark of County Materials Corporation
©2016 County Materials Corporation • 0868_0216

STORMWATER MANAGEMENT PLAN

Majestic
BADGER LOGISTICS CENTER

Village of Pleasant Prairie, Kenosha County, Wisconsin

PEG Project Number: 117.00A-WI

Prepared for:

MAJESTIC REALTY CO.

Revised April 26, 2016

PINNACLE ENGINEERING GROUP
15850 W. Bluemound Road | Suite 210 | Brookfield, WI 53005
www.pinnacle-engr.com

TABLE OF CONTENTS

INTRODUCTION 2
DESIGN CRITERIA 2
ANALYSIS METHODS 2
PREDEVELOPMENT CONDITIONS 3
PROPOSED DEVELOPMENT CONDITIONS 3
Runoff Rate Attenuation 3
Runoff Water Quality 5
Stormwater Infiltration 5
Protective Areas 5
CONCLUSION 6

APPENDICES

APPENDIX 1 – MAPS
- Vicinity Map
- USDA SCS Soils Map

APPENDIX 2 – PRE-DEVELOPMENT CONDITIONS INFORMATION
- Hydrology Exhibit – Existing Conditions
- Hydrographs

APPENDIX 3 – POST-DEVELOPMENT CONDITIONS (RATE ATTENUATION)
- Hydrology Exhibit – Proposed Conditions
- Hydrographs

APPENDIX 4 – POST-DEVELOPMENT CONDITIONS (WATER QUALITY)
- WinSLAMM Modeling Input Data & Output Computations

Questions and comments can be directed to:

Adam R. Artz, P.E.
Sr. Project Manager | Principal
Phone: 262.754.8888 | Fax: 262.754.8850
adam.artz@pinnacle-engr.com

PINNACLE ENGINEERING GROUP
15850 W. Bluemound Road | Suite 210
Brookfield, WI 53005
www.pinnacle-engr.com

INTRODUCTION

The proposed Majestic Badger Logistics Center represents the tract of land generally bounded by County Trunk Highway "H" (CTH H) to the west, the Kenosha Paupers Cemetery on the north, overhead electrical transmission wires on the east, and undeveloped woodland to the south located in the west half of Section 16, Town 1 North, Range 22 in the Village of Pleasant Prairie, Kenosha County, WI. A location map that illustrates the tract of land is included in **Appendix 1**.

The development is proposed to include the construction of high impervious development in areas suitable for development. As part of this project, a Floodplain Boundary Adjustment was prepared by Pinnacle Engineering Group (PEG) to relocate onsite flood storage volume to support the development feasibility. Following the floodplain boundary adjustment, the overall 88-acre parcel will support approximately 65-acres of developable area.

This stormwater management plan is intended to design stormwater management features to allow full improvement of the developable areas, regardless of the site layout, to allow for maximum flexibility in development options.

DESIGN CRITERIA

Village of Pleasant Prairie:.....Section 395-73: Storm Sewer and Drainage System Facilities

Wisconsin Department of Natural Resources:.....NR 216 & NR 151.12

Water Quality: Removal of 80% of the annual total suspended solids (TSS) load.

Water Quantity: Southeastern Wisconsin Regional Planning Commission (SEWRPC) Planning Report No. 44, A Comprehensive Plan for the Des Plaines River Watershed, June 2003, requirements apply. Des Plaines River Watershed standards present maximum allowable runoff release rates of 0.04 cfs/acre, and 0.3 cfs/acre of new development for 2-year and 100-year storm events, respectively.

Infiltration: Non-residential - Infiltrate 60% of the average annual pre-development infiltration volume, or 10% of the 2-year, 24-hour storm, or provide an effective infiltration area equal to at least 2% of the total site area.

ANALYSIS METHODS

HydroCAD® (Version 10.00) software has been used to analyze stormwater characteristics for this stormwater management plan. HydroCAD uses the accepted TR-55 methodology for determining peak discharge runoff rates. Curve Numbers for the proposed ground cover were selected using the standard values specified in TR-55 for a "C" hydrologic soil group. Offsite Curve Numbers were selected as specified within WNDR Standard NR 151. NR 151 specifies a maximum agricultural curve number of 79 for hydrologic soil group "C" soils. Generalized soil group characteristics are located in **Appendix 1**

Stormwater modeling was conducted using 2-year and 100-year storm events with respective rainfall amounts of 2.71 and 5.93 inches in accordance with the current NOAA Atlas 14 Point Precipitation Frequency Estimate.

TSS reduction characteristics for the proposed water quality facilities were determined using WinSLAMM® (Version 10.1) Source Loading and Management Model.

PRE-DEVELOPMENT CONDITIONS

The existing site comprises of mostly open farmland with lowlands along the eastern property line that contain an unnamed tributary to Jerome Creek surrounded by delineated wetlands. The wetlands and ordinary high water marks were delineated by Wetlands and Waterway Consulting.

The site generally slopes from west to east. The western property line along CTH H have areas in excess of 25-ft higher in elevation than that in the low lands along the eastern property line. Additionally, the CTH frontage includes two large diameter culverts (36" CMP & 23"x35 HECMP) that convey stormwater runoff from the west side of CTH H into the subject site. Existing site information including a Pre-development ALTA survey with contours, CTH H Culvert Locations, and USDA SCS soil location maps and reports are included in **Appendix 2**.

POST-DEVELOPMENT CONDITIONS

A vast majority of the required pervious land cover will be situated within the undevelopable areas of the lowlands and within developmental setbacks along property lines. This analysis has calculated the pervious and impervious surfaces represented in the *current development* plan for Majestic Badger Logistic Center. It can be generally represented that the development will feature approximately 90% impervious land cover within the developable areas and 0% impervious land cover in the un-developable areas.

The onsite area based on the current development for the contributing areas directed to the proposed stormwater management pond. This plan does not account for future development. The areas were delineated based on the actual contributing areas represented within the engineering plans prepared by Pinnacle Engineering Group. A contributing watershed map and supporting hydrologic modeling output for the proposed conditions is located in **Appendix 3**.

The stormwater runoff conveyed to this site from the culverts within CTH H will be bypassed around the stormwater system to avoid adverse impacts that would be created if it was directed into the stormwater system. The offsite bypass design is collection within dedicated storm sewer generalized with the same size and slope of the culverts that they attend.

HSG C runoff curve numbers for Impervious and Pervious land covers have been established in modeling, however, impervious numbers were rounded up to ensure a level of flexibility for minor changes.

Peak Runoff Rate Attenuation

Design post-development release rates for the proposed project have been calculated using the Des Plaines River Watershed standards of 0.04 cfs/acre and 0.30 cfs/acre for respective 2-year and 100-year rainfall events for areas which will be developed. A Post-Development

Hydrology Exhibit, design allowable release rate calculations, and HydroCAD Modeling output can be found in **Appendix 3**.

Stormwater runoff peak rates will be controlled through the usage of the onsite "wet" retention basin. The basins have been situated to collect the onsite storm sewer outfalls and also overland relief routing. Post development peak runoff rate attenuation of the will be achieved through the outlet control devices and available stormwater detention volume provided above the pond normal water levels.

The characteristics of this development are such that the required normal water elevations to support the onsite storm sewer system will be below the onsite ground surface elevations. In order to outlet the pond, the design within this report calls for the pond to directly to the Jerome Creek tributary. It is proposed to outlet the pipe into the side of the existing farm drive crossing the tributary. With such a necessity, the modeling includes a defined tailwater that represents the peak water surface elevation of the floodplain for the respective storm events. Tailwater elevations represent published elevations from the Federal Emergency Management Agency Flood Insurance Study (55059CV001A) for Kenosha County, Wisconsin, and incorporated areas.The tailwater condition limits the discharge from the pond in the 100-year rainfall event well below the peak runoff rate attenuation allowable discharge standards.

The pond will also be fitted with an earthen spillway as a tertiary outlet to discharge stormwater runoff in excess of 100-yr storm.

Design post-development release rates for the proposed development have been computed for the proposed watershed. Modeling includes onsite and offsite areas that will contribute to the proposed Pond.

Presentation of pertinent values from the modeling is contained within the following tables.

POST-DEVELOPMENT (PROPOSED) WATERSHED SUMMARY

Area	Area (ac)	CN	Tc (min)	2-year Peak	100-year Peak
PR-END (COMPOSITE)	27.9	95	15	86.26 cfs	201.55 cfs

COMPARISON OF PROPOSED TO ALLOWABLE PEAK FLOWS

Discharge Point		Peak Flows 2-year (cfs)	Peak Flows 100-year (cfs)
POND	PROPOSED	*1.04 cfs	*7.48 cfs
	ALLOWABLE	1.12 cfs	8.37 cfs
	MEETS CODE (?)	**YES**	**YES**

*Both models for the 2-year and 100-year storm events can be found in the appendix of this report. Each storm event has a corresponding "Tailwater" and "Non-Tailwater" model output available for reference. In looking at each model, the models without the tailwater condition

applied provide the highest peak flow release rates and are listed in the table above. The models with the tailwater condition applied reveal the highest pond water elevation for the different storm events. These elevations are labeled accordingly on the civil plans.

Runoff Water Quality

Post-development water quality will be obtained within the wet detention basin. Impervious surfaces will be captured and conveyed into the pond per the current civil design. The primary conveyance will be accomplished through the onsite storm sewer while flows in excess of the capacity of the storm sewer will route along designed overland relief.

The basins have been designed using the parameters set forth in WDNR Technical Standard 1001. The basin features a minimum 5-foot permanent pool depth to allow for sediment settling and storage. The basin will discharge through a multi-stage outlet configuration that includes a dewatering orifice to control runoff associated with a 2-yr storm event. Water quality will be enhanced by 1-foot inlet catch basin sumps located within inlets that serve the parking lots.

WinSLAMM modeling indicates that the ponds will remove a minimum of 80% TSS prior to runoff leaving the site. Refer to **Appendix 4** for WinSLAMM modeling input/output summaries.

Stormwater Infiltration

Stormwater Infiltration has not been incorporated into this storm water management due to clayey soils and also shallow groundwater present onsite. Per DNR Technical Standard 1002, sites with clayey soils and/or shallow groundwater are exempt from NR 151 infiltration requirements.

Protective Areas

Protective areas are required along all wetlands in order to minimize impacts of pollutants from untreated impervious sources. On this project, all impervious surfaces are directed to the wet detention pond which treat the runoff to the 80% TSS removal standard prior to discharge towards the protective areas. Thus, protective areas are not required under this plan.

CONCLUSION

The stormwater management features for the Majestic Badger Logistics Center development have been designed to comply with Village of Pleasant Prairie ordinance and WDNR technical standards NR151 and NR216. Proposed runoff rates will be reduced from those of existing for 2-year and 100-year storm events to meet Des Plaines River Watershed standards and also to ensure downstream conveyance capacity. Storm water runoff from the site will be treated to remove at least 80% total suspended solids annually through wet detention. It is believed the site meets criteria set forth in WDNR NR 151 to be exempt from infiltration requirements; therefore, infiltration measures have not been included in this storm water management plan.

(Appendices Follow)

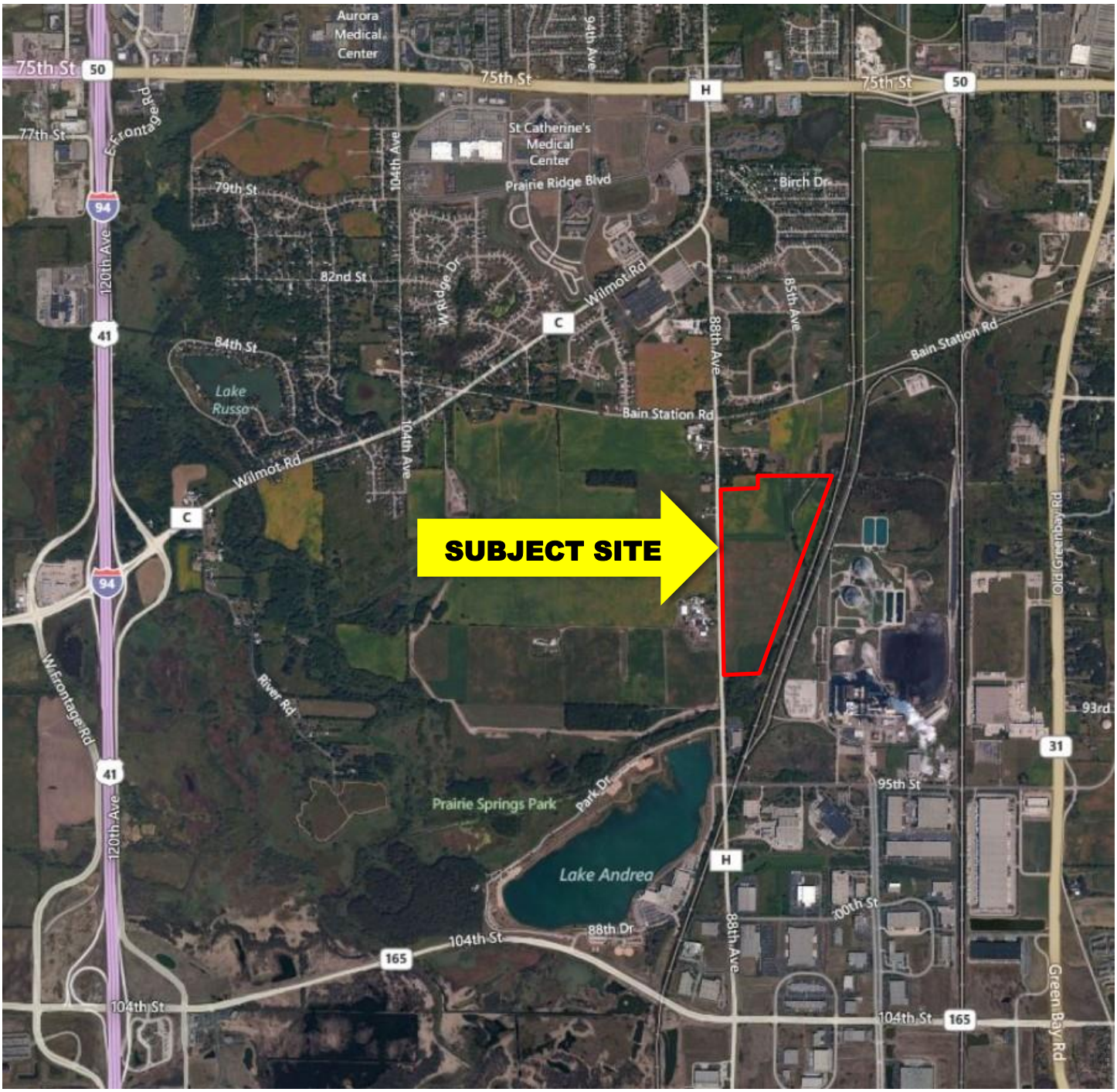

CTH "H" (88th Ave) | Pleasant Prairie, Kenosha County, WI

Site Location Map

(Majestic Badger Logistics Center)

Map Scale: 1:5,630 if printed on A size (8.5" x 11") sheet.

N

Meters
0 50 100 200 300

Feet
0 200 400 800 1,200

MAP LEGEND

Area of Interest (AOI)

Area of Interest (AOI)

Soils

Soil Map Units

Special Point Features

Blowout

Borrow Pit

Clay Spot

Closed Depression

Gravel Pit

Gravelly Spot

Landfill

Lava Flow

Marsh or swamp

Mine or Quarry

Miscellaneous Water

Perennial Water

Rock Outcrop

Saline Spot

Sandy Spot

Severely Eroded Spot

Sinkhole

Slide or Slip

Sodic Spot

Spoil Area

Stony Spot

Very Stony Spot

Wet Spot

Other

Special Line Features

Gully

Short Steep Slope

Other

Political Features

Cities

Water Features

Streams and Canals

Transportation

Rails

Interstate Highways

US Routes

Major Roads

Local Roads

MAP INFORMATION

Map Scale: 1:5,630 if printed on A size (8.5" × 11") sheet.

The soil surveys that comprise your AOI were mapped at 1:15,840.

Warning: Soil Map may not be valid at this scale.

Enlargement of maps beyond the scale of mapping can cause misunderstanding of the detail of mapping and accuracy of soil line placement. The maps do not show the small areas of contrasting soils that could have been shown at a more detailed scale.

Please rely on the bar scale on each map sheet for accurate map measurements.

Source of Map: Natural Resources Conservation Service
Web Soil Survey URL: http://websoilsurvey.nrcs.usda.gov
Coordinate System: UTM Zone 16N NAD83

This product is generated from the USDA-NRCS certified data as of the version date(s) listed below.

Soil Survey Area: Kenosha and Racine Counties, Wisconsin
Survey Area Data: Version 8, Jun 26, 2012

Date(s) aerial images were photographed: 6/8/2005

The orthophoto or other base map on which the soil lines were compiled and digitized probably differs from the background imagery displayed on these maps. As a result, some minor shifting of map unit boundaries may be evident.

Map Unit Legend

Kenosha and Racine Counties, Wisconsin (WI601)			
Map Unit Symbol	**Map Unit Name**	**Acres in AOI**	**Percent of AOI**
AtA	Ashkum silty clay loam, 0 to 3 percent slopes	0.1	0.1%
AzA	Aztalan loam, 0 to 2 percent slopes	0.1	0.2%
AzB	Aztalan loam, 2 to 6 percent slopes	11.5	14.4%
EtB	Elliott silty clay loam, 2 to 6 percent slopes	2.3	2.9%
HeB2	Hebron loam, 2 to 6 percent slopes, eroded	7.1	8.9%
MzdB	Morley silt loam, 2 to 6 percent slopes	11.4	14.3%
MzdB2	Morley silt loam, 2 to 6 percent slopes, eroded	9.1	11.4%
Na	Navan silt loam	8.2	10.3%
Sm	Sebewa silt loam	29.6	37.0%
WeB	Warsaw loam, 2 to 6 percent slopes	0.5	0.6%
Totals for Area of Interest		**80.0**	**100.0%**

RUSLE2 Related Attributes

This report summarizes those soil attributes used by the Revised Universal Soil Loss Equation Version 2 (RUSLE2) for the map units in the selected area. The report includes the map unit symbol, the component name, and the percent of the component in the map unit. Soil property data for each map unit component include the hydrologic soil group, erosion factors Kf for the surface horizon, erosion factor T, and the representative percentage of sand, silt, and clay in the surface horizon.

Report—RUSLE2 Related Attributes

RUSLE2 Related Attributes– Kenosha and Racine Counties, Wisconsin								
Map symbol and soil name	Pct. of map unit	Slope length (ft)	Hydrologic group	Kf	T factor	Representative value		
						% Sand	% Silt	% Clay
AtA—Ashkum silty clay loam, 0 to 3 percent slopes								
Ashkum	100	249	B/D	.32	5	18.5	44.0	37.5
AzA—Aztalan loam, 0 to 2 percent slopes								
Aztalan	95	249	C	.24	5	42.1	37.9	20.0
AzB—Aztalan loam, 2 to 6 percent slopes								
Aztalan	95	200	C	.24	5	42.1	37.9	20.0
EtB—Elliott silty clay loam, 2 to 6 percent slopes								
Elliott	95	200	C	.32	5	18.1	50.9	31.0
HeB2—Hebron loam, 2 to 6 percent slopes, eroded								
Hebron	100	200	B	.32	5	45.7	41.8	12.5
MzdB—Morley silt loam, 2 to 6 percent slopes								
Morley	100	200	C	.37	3	20.9	54.6	24.5
MzdB2—Morley silt loam, 2 to 6 percent slopes, eroded								
Morley	100	200	C	.37	3	20.9	54.6	24.5
Na—Navan silt loam								
Navan	100	249	D	.37	5	30.1	54.9	15.0
Sm—Sebewa silt loam								
Sebewa	100	249	B/D	.32	4	27.1	54.4	18.5
WeB—Warsaw loam, 2 to 6 percent slopes								
Warsaw	100	200	B	.24	4	42.1	37.9	20.0

Data Source Information

Soil Survey Area: Kenosha and Racine Counties, Wisconsin
Survey Area Data: Version 8, Jun 26, 2012

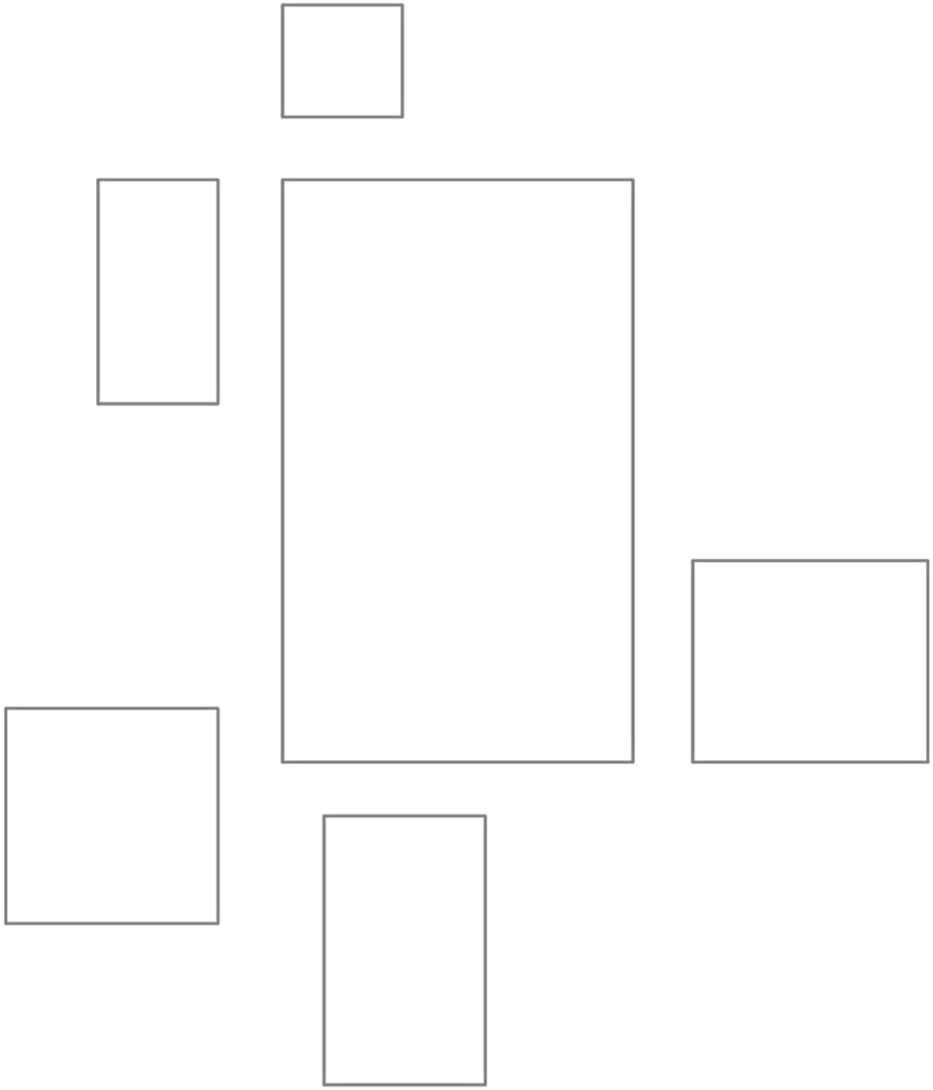

2 Appendix

"THE INFORMATION SHOWN ON THIS DRAWING CONCERNING TYPE AND LOCATION OF UNDERGROUND UTILITIES IS NOT GUARANTEED TO BE ACCURATE OR ALL INCLUSIVE; THE CONTRACTOR IS RESPONSIBLE FOR MAKING HIS OWN DETERMINATIONS AS TO THE TYPE AND LOCATION OF UNDERGROUND UTILITIES AS MAY BE NECESSARY TO AVOID DAMAGE THERETO. IF ADDITIONAL UTILITIES ARE KNOWN TO EXIST IN THE PROPERTY, THE OWNER WILL PROVIDE EXISTING PLANS OF OTHER UTILITIES SERVING THE SITE AND THE BUILDING THAT OTHERWISE CANNOT BE LOCATED BY A VISUAL OBSERVATION OF THE PROPERTY OR OF WHICH THE SURVEYOR WOULD HAVE NO KNOWLEDGE".

EXISTING CONDITIONS SURVEY:

EXISTING CONDITIONS SURVEY PROVIDED BY CHAPUT LAND SURVEY, LLC. ALTHOUGH PEG HAS NO REASON TO BELIEVE THE SURVEY IS INACCURATE, PEG MAKES NO WARRANTS THAT EXISTING INFORMATION CONTAINED WITHIN THESE PLANS IS ALL-INCLUSIVE OR ACCURATE. CONTRACTOR SHALL UNDERTAKE NECESSARY EFFORTS TO VERIFY THE EXISTING CONDITIONS PRIOR TO THE START OF MATERIAL PROCUREMENT AND CONSTRUCTION EFFORTS/ACTIVITIES.

NOTE:
SITE SURVEY WAS COMPLETED ON NOVEMBER 26, 2012. CONTRACTOR RESPONSIBLE TO FIELD VERIFY ALL EXISTING CONDITIONS IN THE ADJACENT RIGHTS-OF WAY AND UTILITY EASEMENTS PRIOR TO START OF CONSTRUCTION.

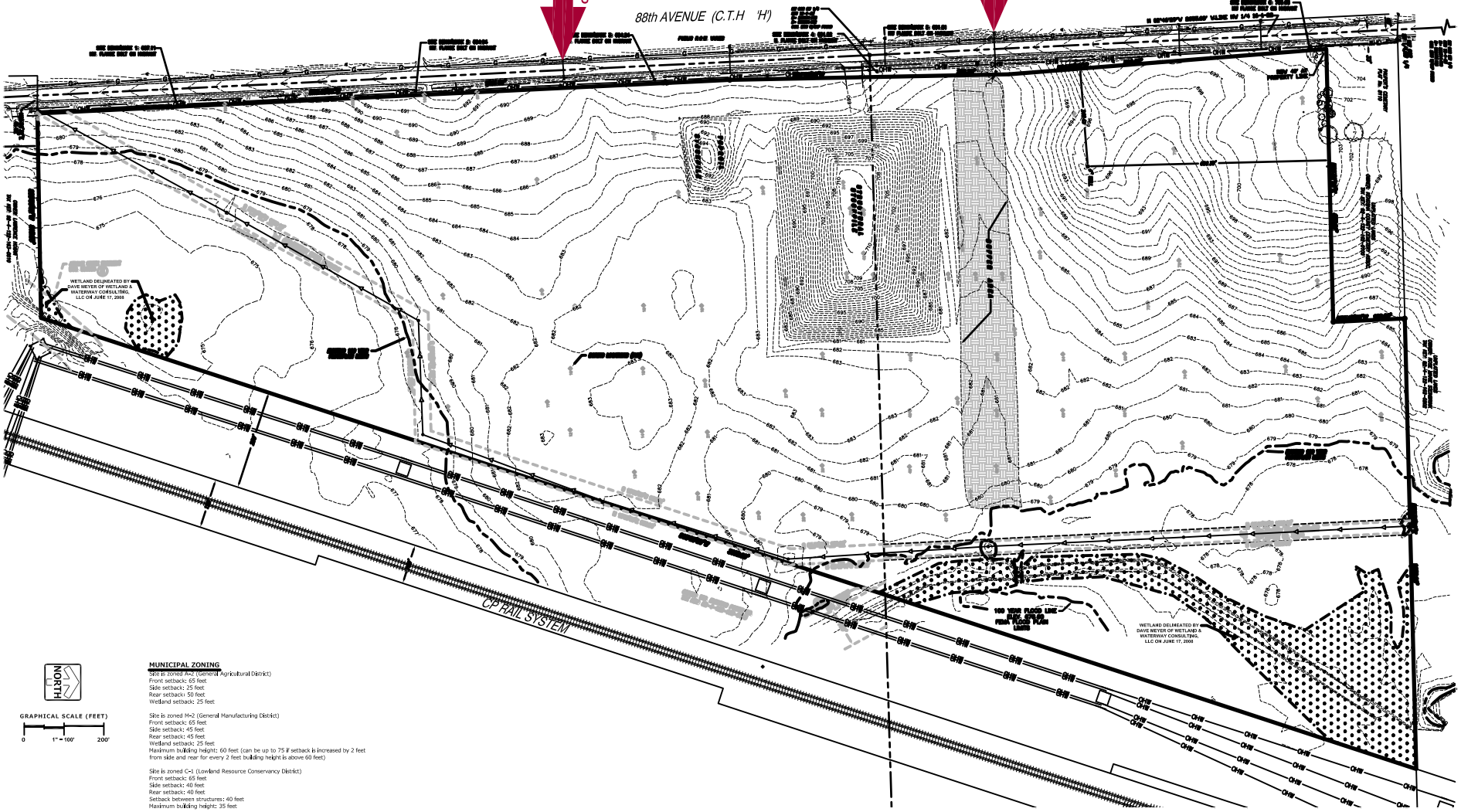

LEGEND

SANITARY MANHOLE	LIGHTING
STORM MANHOLE	ELECTRICAL CABLE
CATCH BASIN	ELECTRICAL TRANSFORMER OR PEDESTAL
INLET	POWER POLE
PRECAST FLARED END SECTION	POWER POLE WITH LIGHT
CONCRETE HEADWALL	GUY WIRE
VALVE VAULT	STREET SIGN
VALVE BOX	GAS MAIN
FIRE HYDRANT	TELEPHONE LINE
BUFFALO BOX	CONTOUR
CLEANOUT	OVERFLOW RELIEF ROUTING
SANITARY SEWER	TREE WITH TRUNK SIZE
FORCE MAIN	CONCRETE SIDEWALK
STORM SEWER	EASEMENT LINE
WATER MAIN	

NORTH

GRAPHICAL SCALE (FEET)
0 1" = 100' 200'

MUNICIPAL ZONING

Site is zoned Agricultural District (General Agricultural District)
Front setback: 65 feet
Side setback: 25 feet
Rear setback: 50 feet
Wetland setback: 25 feet

Site is zoned M-2 (General Manufacturing District)
Front setback: 65 feet
Side setback: 45 feet
Rear setback: 45 feet
Wetland setback: 25 feet
Maximum building height: 60 feet (can be up to 75 if setback is increased by 2 feet from side and rear for every 2 feet building height is above 60 feet)

Site is zoned C-1 (Lowland Resource Conservancy District)
Front setback: 65 feet
Side setback: 40 feet
Rear setback: 40 feet
Setback between structures: 40 feet
Maximum building height: 35 feet

Site is zoned FPO (Floodplain Overlay District)

Site is zoned SO (Shoreland Overlay)

LAND AREA

The Land Area of the subject property is 3,848,248 square feet or 88.3436 acres

PLAN | DESIGN | DELIVER
www.pinnacle-eng.com

PINNACLE ENGINEERING GROUP
ENGINEERING | NATURAL RESOURCES | SURVEYING

WISCONSIN OFFICE:
15850 W. BLUEMOUND ROAD
BROOKFIELD, WI 53005
(262) 784-9888
CHICAGO METRO AREA OFFICE (847) 639-0400

PEG JOB NO. 117.00

REVISIONS	BY	DATE

REVISIONS	BY	DATE

COMMERCE CONSTRUCTION CO., L.P.
13191 Crossroads Parkway North
Sixth Floor
City of Industry, California 91746-3497
Telephone: (562) 699-0453
License No. 723302

EXISTING CONDITIONS

ENGINEERING IMPROVEMENTS PLANS FOR MAJESTIC BADGER LOGISTICS CENTER

CTH "H" VILLAGE OF PLEASANT PRAIRIE, WI

Drawing Plot Bar
Use this dot bar to confirm drawing has not been reduced or enlarged from original. If this dot bar is not exactly 1 inch long the printed size of drawing has changed.

DRAWN BY DATE
PEG,LLC 4/11/13

CCC JOB NO.
117.00

SHEET NO.
C-2

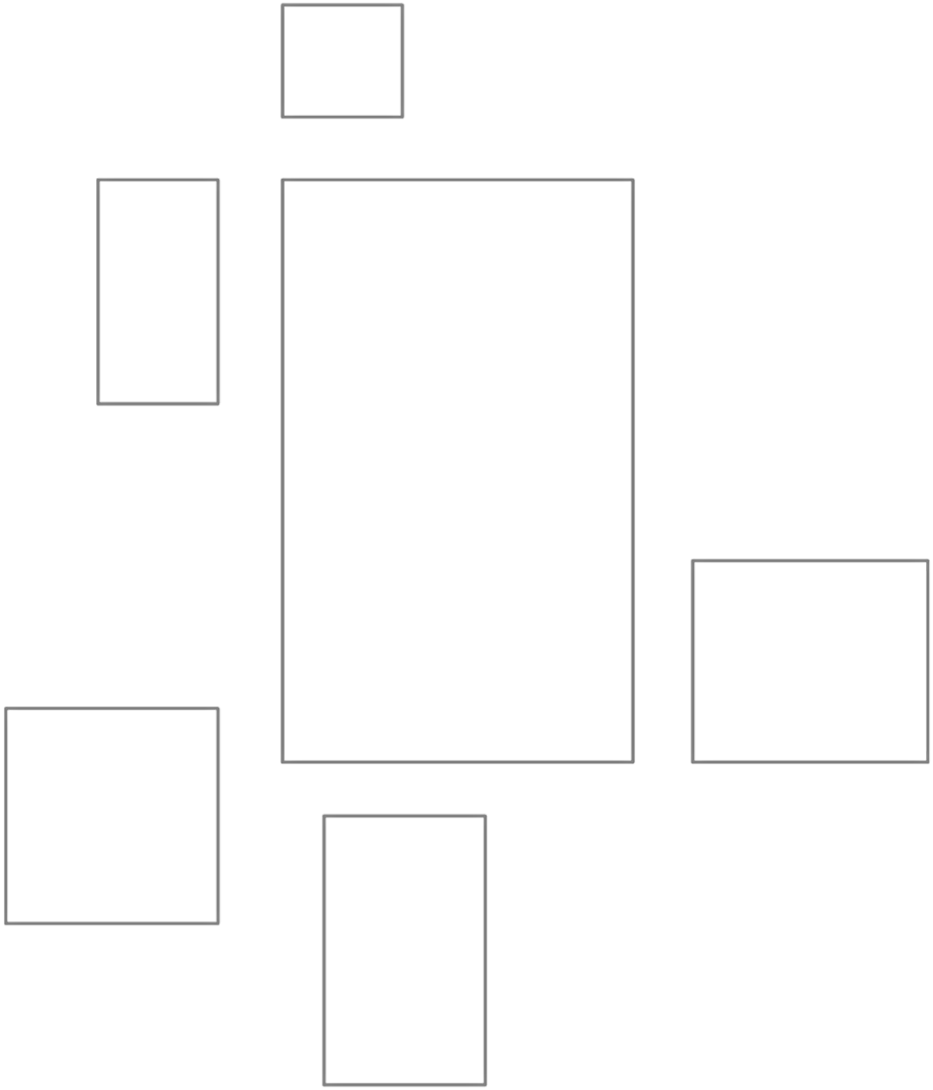

3 Appendix

THESE PLANS AND DESIGNS ARE COPYRIGHT PROTECTED AND MAY NOT BE USED IN WHOLE OR IN PART WITHOUT THE WRITTEN CONSENT OF PINNACLE ENGINEERING GROUP, LLC

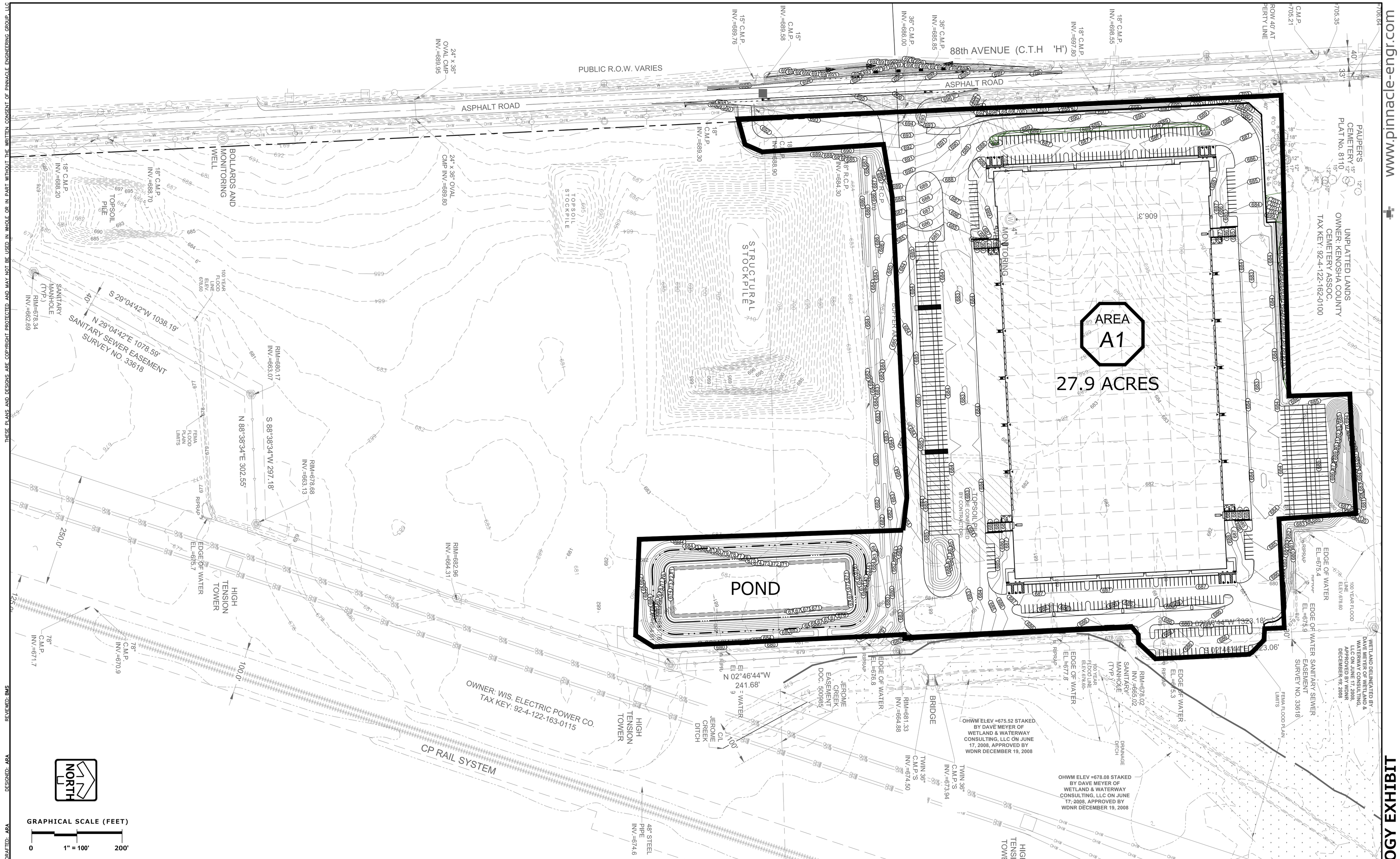

DRAFTED: ARA
DESIGNED: ARA
REVIEWED: BMS

PLAN I DESIGN I DELIVER
www.pinnacle-engr.com

PINNACLE ENGINEERING GROUP
ENGINEERING I NATURAL RESOURCES I SURVEYING

WISCONSIN OFFICE:
15850 W. BLUEMOUND ROAD
BROOKFIELD, WI 53005
(262) 754-8888
CHICAGO I MILWAUKEE : NATIONWIDE

MAJESTIC CENTER
PLEASANT PRAIRIE, WI

HYDROLOGY EXHIBIT

REVISIONS

PEG JOB No. 117.00
PEG PM ARA
START DATE 03/22/16
SCALE 1"=100'

SHEET
EX-1
OF
EX-1

HYDROLOGY EXHIBIT

www.pinnacle-engr.com

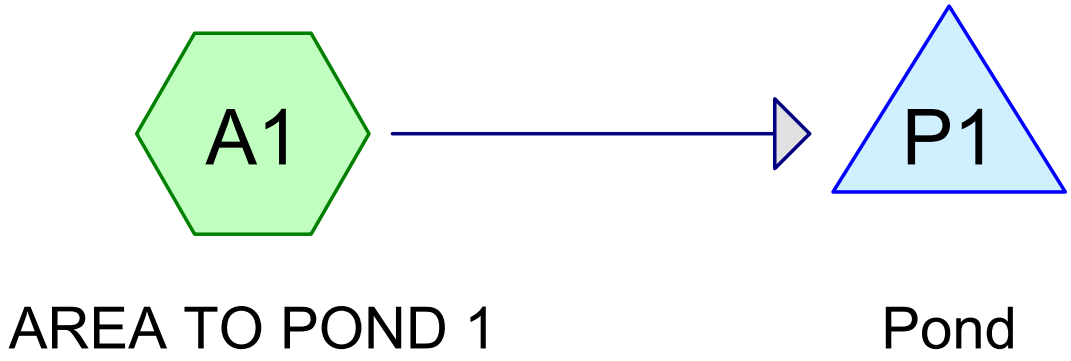

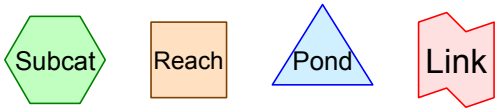

Routing Diagram for PROPOSED (2yr NOTailwater)
Prepared by Hewlett-Packard Company, Printed 4/20/2016
HydroCAD® 10.00-14 s/n 07894 © 2015 HydroCAD Software Solutions LLC

Summary for Subcatchment A1: AREA TO POND 1

Runoff = 86.26 cfs @ 12.01 hrs, Volume= 5.049 af, Depth= 2.17"

Runoff by SCS TR-20 method, UH=SCS, Weighted-CN, Time Span= 0.00-120.00 hrs, dt= 0.05 hrs
Type II 24-hr 2-YEAR Rainfall=2.71"

Area (sf)	CN	Description
425,000	98	Roofs, HSG C
600,000	98	Paved parking, HSG C
150,000	74	>75% Grass cover, Good, HSG C
43,000	98	Water Surface, HSG C
1,218,000	95	Weighted Average
150,000	74	12.32% Pervious Area
1,068,000	98	87.68% Impervious Area

Tc (min)	Length (feet)	Slope (ft/ft)	Velocity (ft/sec)	Capacity (cfs)	Description
10.0					**Direct Entry,**

Subcatchment A1: AREA TO POND 1

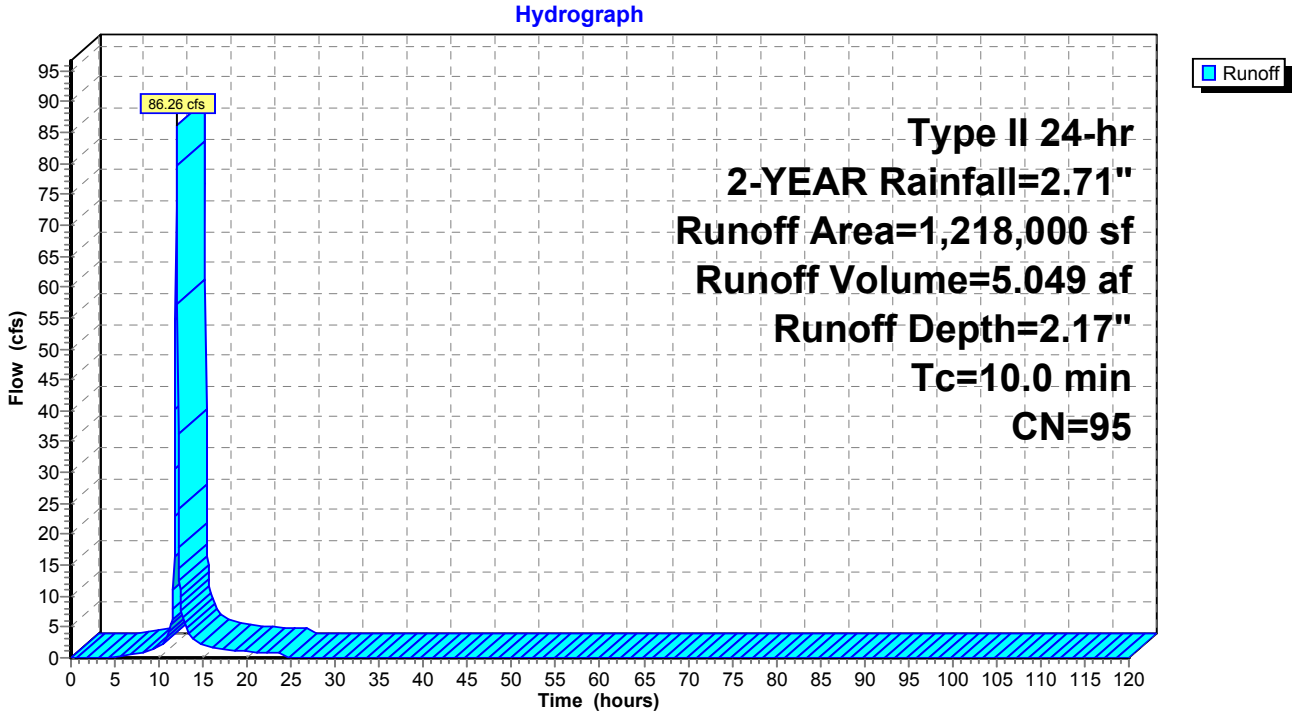

Summary for Pond P1: Pond

Inflow Area =	27.961 ac, 87.68% Impervious, Inflow Depth = 2.17" for 2-YEAR event				
Inflow =	86.26 cfs @	12.01 hrs,	Volume=	5.049 af	
Outflow =	0.96 cfs @	20.18 hrs,	Volume=	4.907 af,	Atten= 99%, Lag= 490.5 min
Primary =	0.96 cfs @	20.18 hrs,	Volume=	4.907 af	
Secondary =	0.00 cfs @	0.00 hrs,	Volume=	0.000 af	

Routing by Stor-Ind method, Time Span= 0.00-120.00 hrs, dt= 0.05 hrs
Peak Elev= 678.98' @ 20.18 hrs Surf.Area= 58,508 sf Storage= 176,285 cf

Plug-Flow detention time= 2,114.0 min calculated for 4.907 af (97% of inflow)
Center-of-Mass det. time= 2,096.6 min (2,883.2 - 786.7)

Volume	Invert	Avail.Storage	Storage Description
#1	675.50'	526,839 cf	**Custom Stage Data (Prismatic)** Listed below (Recalc)

Elevation (feet)	Surf.Area (sq-ft)	Inc.Store (cubic-feet)	Cum.Store (cubic-feet)
675.50	42,870	0	0
684.00	81,092	526,839	526,839

Device	Routing	Invert	Outlet Devices
#1	Primary	675.50'	**15.0" Round Culvert** L= 393.5' RCP, end-section conforming to fill, Ke= 0.500 Inlet / Outlet Invert= 675.50' / 674.50' S= 0.0025 '/' Cc= 0.900 n= 0.013 Concrete pipe, straight & clean, Flow Area= 1.23 sf
#2	Secondary	683.00'	**20.0' long x 10.0' breadth Broad-Crested Rectangular Weir** Head (feet) 0.20 0.40 0.60 0.80 1.00 1.20 1.40 1.60 Coef. (English) 2.49 2.56 2.70 2.69 2.68 2.69 2.67 2.64
#3	Device 1	675.50'	**4.5" Vert. Orifice/Grate** C= 0.600
#4	Device 1	679.20'	**36.0" Horiz. Orifice/Grate** C= 0.600 Limited to weir flow at low heads

Primary OutFlow Max=0.96 cfs @ 20.18 hrs HW=678.98' (Free Discharge)
└─**1=Culvert** (Passes 0.96 cfs of 5.41 cfs potential flow)
  ├─**3=Orifice/Grate** (Orifice Controls 0.96 cfs @ 8.73 fps)
  └─**4=Orifice/Grate** (Controls 0.00 cfs)

Secondary OutFlow Max=0.00 cfs @ 0.00 hrs HW=675.50' (Free Discharge)
└─**2=Broad-Crested Rectangular Weir** (Controls 0.00 cfs)

Pond P1: Pond

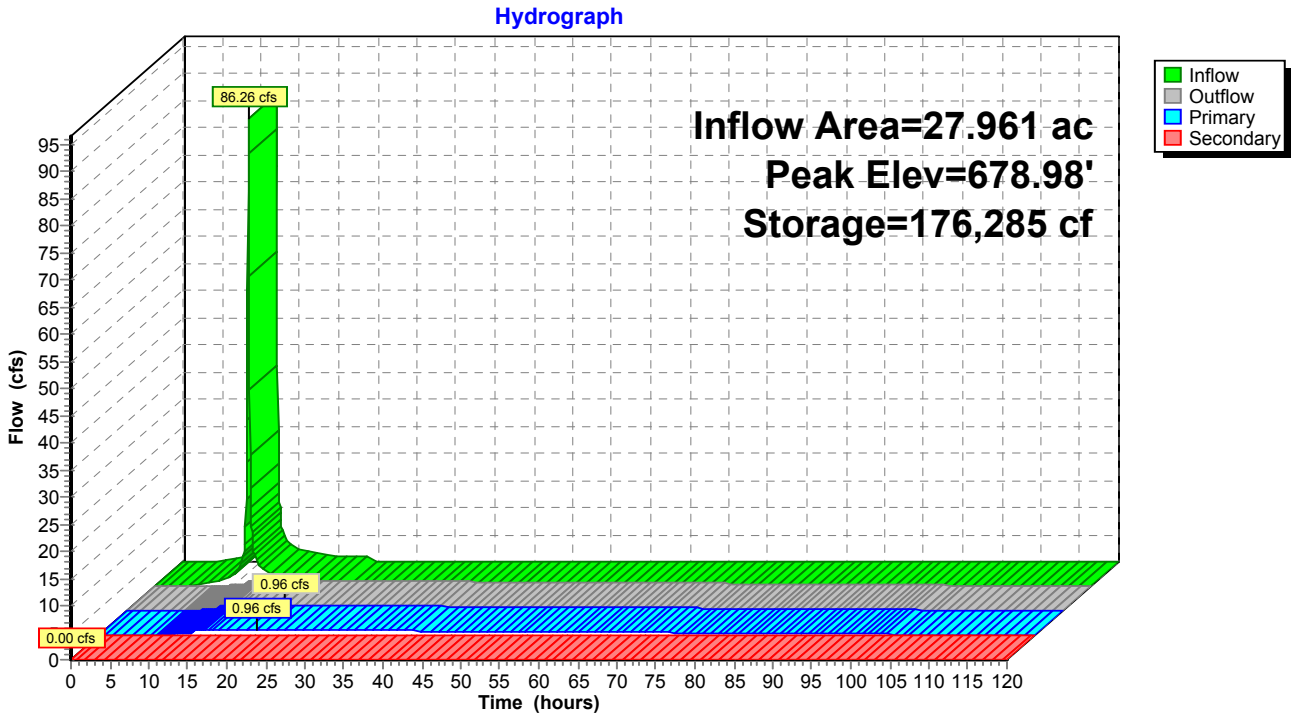
Hydrograph
Inflow
Outflow
Primary
Secondary
86.26 cfs
0.96 cfs
0.96 cfs
0.00 cfs
Inflow Area=27.961 ac
Peak Elev=678.98'
Storage=176,285 cf
Flow (cfs)
Time (hours)

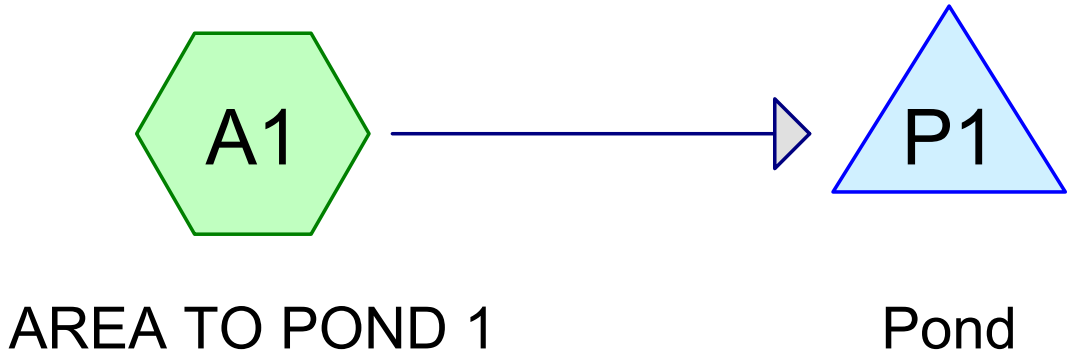

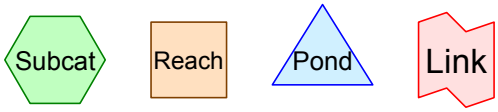

Routing Diagram for PROPOSED (2yr Tailwater)
Prepared by Hewlett-Packard Company, Printed 4/20/2016
HydroCAD® 10.00-14 s/n 07894 © 2015 HydroCAD Software Solutions LLC

Summary for Subcatchment A1: AREA TO POND 1

Runoff = 86.26 cfs @ 12.01 hrs, Volume= 5.049 af, Depth= 2.17"

Runoff by SCS TR-20 method, UH=SCS, Weighted-CN, Time Span= 0.00-120.00 hrs, dt= 0.05 hrs
Type II 24-hr 2-YEAR Rainfall=2.71"

Area (sf)	CN	Description
425,000	98	Roofs, HSG C
600,000	98	Paved parking, HSG C
150,000	74	>75% Grass cover, Good, HSG C
43,000	98	Water Surface, HSG C
1,218,000	95	Weighted Average
150,000	74	12.32% Pervious Area
1,068,000	98	87.68% Impervious Area

Tc (min)	Length (feet)	Slope (ft/ft)	Velocity (ft/sec)	Capacity (cfs)	Description
10.0					**Direct Entry,**

Subcatchment A1: AREA TO POND 1

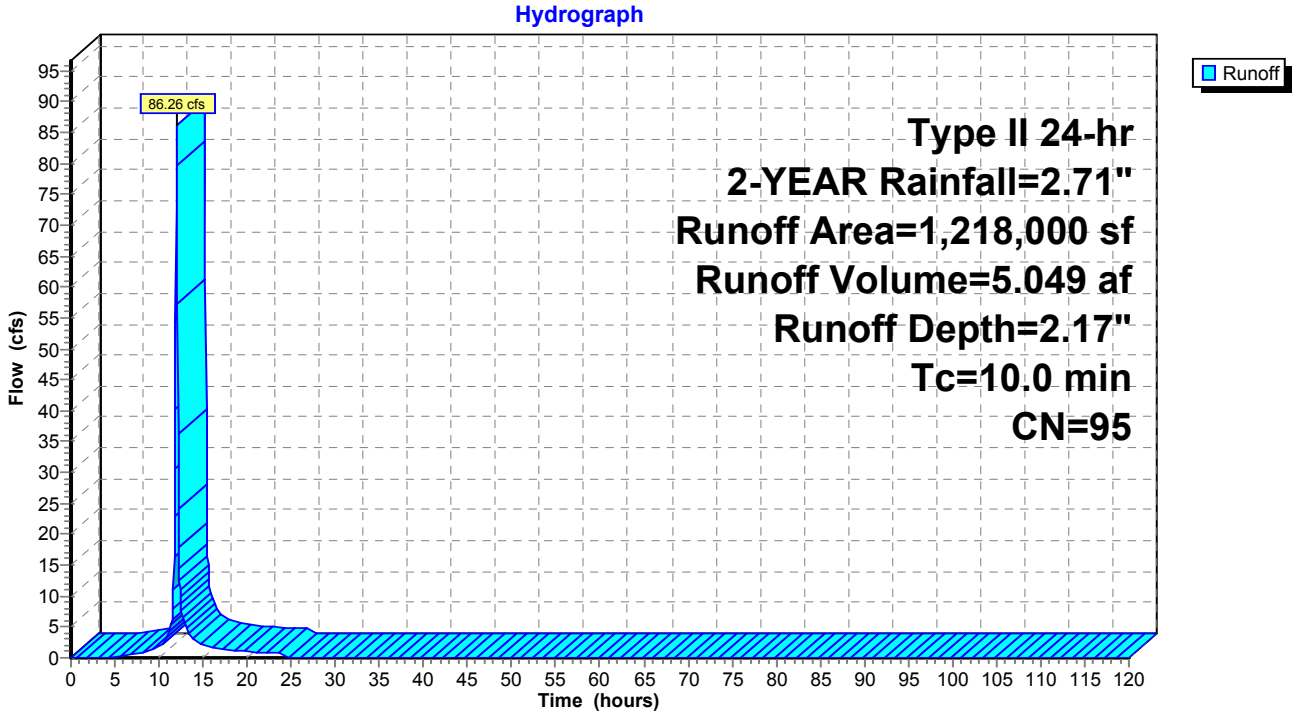

Summary for Pond P1: Pond

Inflow Area =	27.961 ac, 87.68% Impervious, Inflow Depth = 2.17" for 2-YEAR event				
Inflow =	86.26 cfs @	12.01 hrs,	Volume=	5.049 af	
Outflow =	1.04 cfs @	19.75 hrs,	Volume=	1.502 af,	Atten= 99%, Lag= 464.3 min
Primary =	1.04 cfs @	19.75 hrs,	Volume=	1.502 af	
Secondary =	0.00 cfs @	0.00 hrs,	Volume=	0.000 af	

Routing by Stor-Ind method, Time Span= 0.00-120.00 hrs, dt= 0.05 hrs
Peak Elev= 679.27' @ 19.75 hrs Surf.Area= 59,810 sf Storage= 193,409 cf

Plug-Flow detention time= 1,259.4 min calculated for 1.502 af (30% of inflow)
Center-of-Mass det. time= 1,112.8 min (1,899.5 - 786.7)

Volume	Invert	Avail.Storage	Storage Description
#1	675.50'	526,839 cf	**Custom Stage Data (Prismatic)** Listed below (Recalc)

Elevation (feet)	Surf.Area (sq-ft)	Inc.Store (cubic-feet)	Cum.Store (cubic-feet)
675.50	42,870	0	0
684.00	81,092	526,839	526,839

Device	Routing	Invert	Outlet Devices
#1	Primary	675.50'	**15.0" Round Culvert** L= 393.5' RCP, end-section conforming to fill, Ke= 0.500 Inlet / Outlet Invert= 675.50' / 674.50' S= 0.0025 '/' Cc= 0.900 n= 0.013 Concrete pipe, straight & clean, Flow Area= 1.23 sf
#2	Secondary	683.00'	**20.0' long x 10.0' breadth Broad-Crested Rectangular Weir** Head (feet) 0.20 0.40 0.60 0.80 1.00 1.20 1.40 1.60 Coef. (English) 2.49 2.56 2.70 2.69 2.68 2.69 2.67 2.64
#3	Device 1	675.50'	**4.5" Vert. Orifice/Grate** C= 0.600
#4	Device 1	679.20'	**36.0" Horiz. Orifice/Grate** C= 0.600 Limited to weir flow at low heads

Primary OutFlow Max=0.97 cfs @ 19.75 hrs HW=679.27' TW=678.60' (Fixed TW Elev= 678.60')
└─**1=Culvert** (Passes 0.97 cfs of 2.46 cfs potential flow)
  ├─**3=Orifice/Grate** (Orifice Controls 0.43 cfs @ 3.93 fps)
  └─**4=Orifice/Grate** (Weir Controls 0.54 cfs @ 0.85 fps)

Secondary OutFlow Max=0.00 cfs @ 0.00 hrs HW=675.50' TW=678.60' (Fixed TW Elev= 678.60')
└─**2=Broad-Crested Rectangular Weir** (Controls 0.00 cfs)

Pond P1: Pond

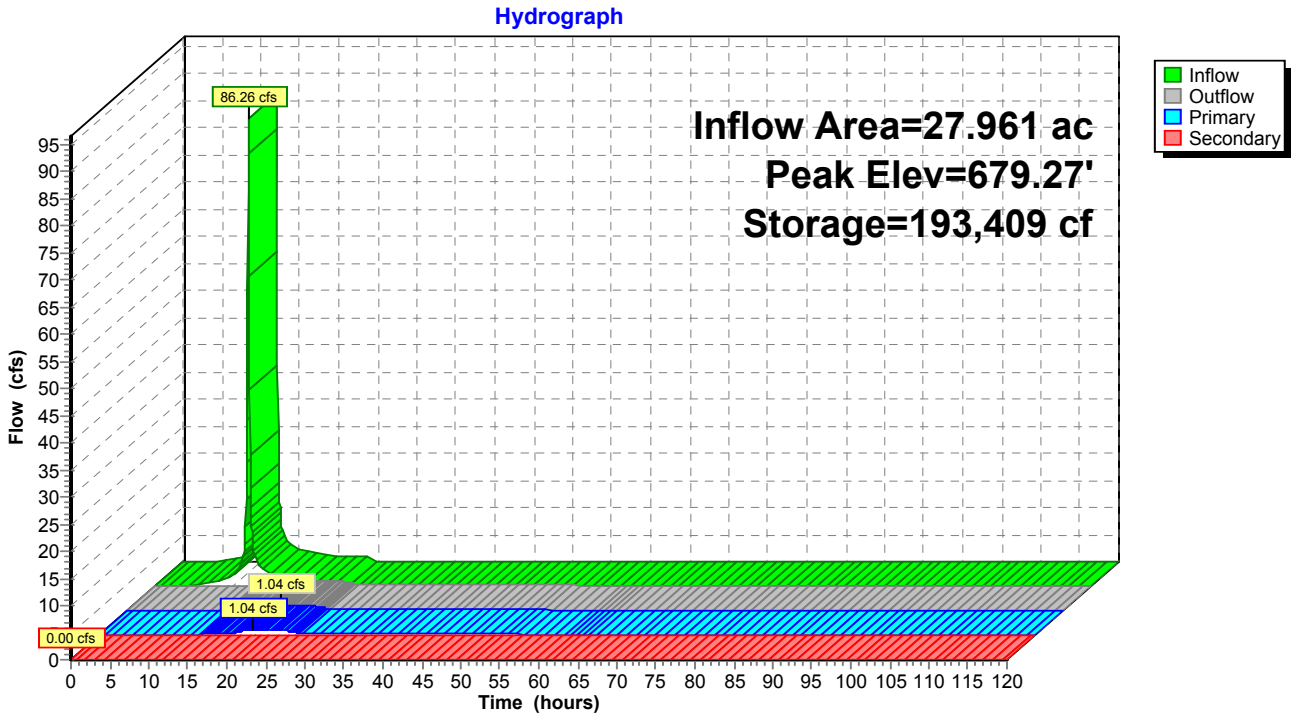
Hydrograph
Inflow
Outflow
Primary
Secondary
86.26 cfs
1.04 cfs
1.04 cfs
0.00 cfs
Inflow Area=27.961 ac
Peak Elev=679.27'
Storage=193,409 cf
Flow (cfs)
Time (hours)

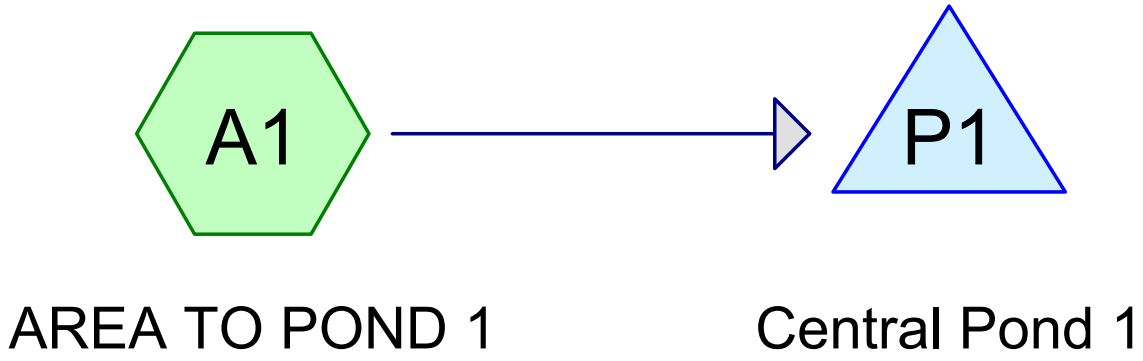

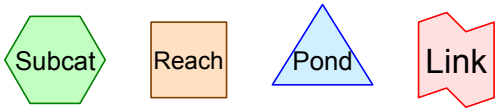

Routing Diagram for PROPOSED (100yr NO Tailwater)
Prepared by Hewlett-Packard Company, Printed 4/20/2016
HydroCAD® 10.00-14 s/n 07894 © 2015 HydroCAD Software Solutions LLC

Summary for Subcatchment A1: AREA TO POND 1

Runoff = 201.55 cfs @ 12.01 hrs, Volume= 12.448 af, Depth= 5.34"

Runoff by SCS TR-20 method, UH=SCS, Weighted-CN, Time Span= 0.00-120.00 hrs, dt= 0.05 hrs
Type II 24-hr 100-YEAR Rainfall=5.93"

Area (sf)	CN	Description
425,000	98	Roofs, HSG C
600,000	98	Paved parking, HSG C
150,000	74	>75% Grass cover, Good, HSG C
43,000	98	Water Surface, HSG C
1,218,000	95	Weighted Average
150,000	74	12.32% Pervious Area
1,068,000	98	87.68% Impervious Area

Tc (min)	Length (feet)	Slope (ft/ft)	Velocity (ft/sec)	Capacity (cfs)	Description
10.0					**Direct Entry,**

Subcatchment A1: AREA TO POND 1

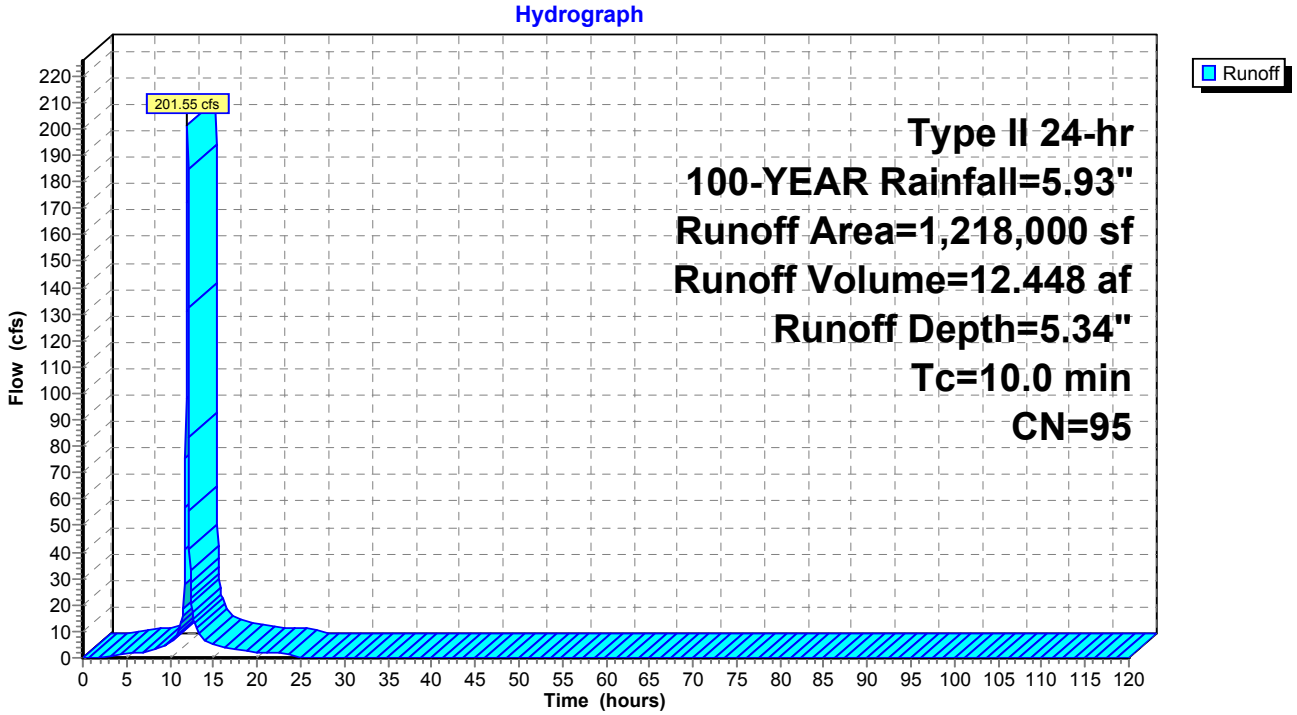

Summary for Pond P1: Central Pond 1

Inflow Area = 27.961 ac, 87.68% Impervious, Inflow Depth = 5.34" for 100-YEAR event
Inflow = 201.55 cfs @ 12.01 hrs, Volume= 12.448 af
Outflow = 7.48 cfs @ 13.75 hrs, Volume= 12.268 af, Atten= 96%, Lag= 104.5 min
Primary = 7.48 cfs @ 13.75 hrs, Volume= 12.268 af
Secondary = 0.00 cfs @ 0.00 hrs, Volume= 0.000 af

Routing by Stor-Ind method, Time Span= 0.00-120.00 hrs, dt= 0.05 hrs
Peak Elev= 681.91' @ 13.75 hrs Surf.Area= 71,681 sf Storage= 366,969 cf

Plug-Flow detention time= 1,193.7 min calculated for 12.263 af (99% of inflow)
Center-of-Mass det. time= 1,186.1 min (1,950.0 - 763.9)

Volume	Invert	Avail.Storage	Storage Description
#1	675.50'	526,839 cf	**Custom Stage Data (Prismatic)** Listed below (Recalc)

Elevation (feet)	Surf.Area (sq-ft)	Inc.Store (cubic-feet)	Cum.Store (cubic-feet)
675.50	42,870	0	0
684.00	81,092	526,839	526,839

Device	Routing	Invert	Outlet Devices
#1	Primary	675.50'	**15.0" Round Culvert** L= 393.5' RCP, end-section conforming to fill, Ke= 0.500 Inlet / Outlet Invert= 675.50' / 674.50' S= 0.0025 '/' Cc= 0.900 n= 0.013 Concrete pipe, straight & clean, Flow Area= 1.23 sf
#2	Secondary	683.00'	**20.0' long x 10.0' breadth Broad-Crested Rectangular Weir** Head (feet) 0.20 0.40 0.60 0.80 1.00 1.20 1.40 1.60 Coef. (English) 2.49 2.56 2.70 2.69 2.68 2.69 2.67 2.64
#3	Device 1	675.50'	**4.5" Vert. Orifice/Grate** C= 0.600
#4	Device 1	679.20'	**36.0" Horiz. Orifice/Grate** C= 0.600 Limited to weir flow at low heads

Primary OutFlow Max=7.48 cfs @ 13.75 hrs HW=681.91' (Free Discharge)
└─**1=Culvert** (Barrel Controls 7.48 cfs @ 6.09 fps)
  ├─**3=Orifice/Grate** (Passes < 1.33 cfs potential flow)
  └─**4=Orifice/Grate** (Passes < 56.00 cfs potential flow)

Secondary OutFlow Max=0.00 cfs @ 0.00 hrs HW=675.50' (Free Discharge)
└─**2=Broad-Crested Rectangular Weir** (Controls 0.00 cfs)

Pond P1: Central Pond 1

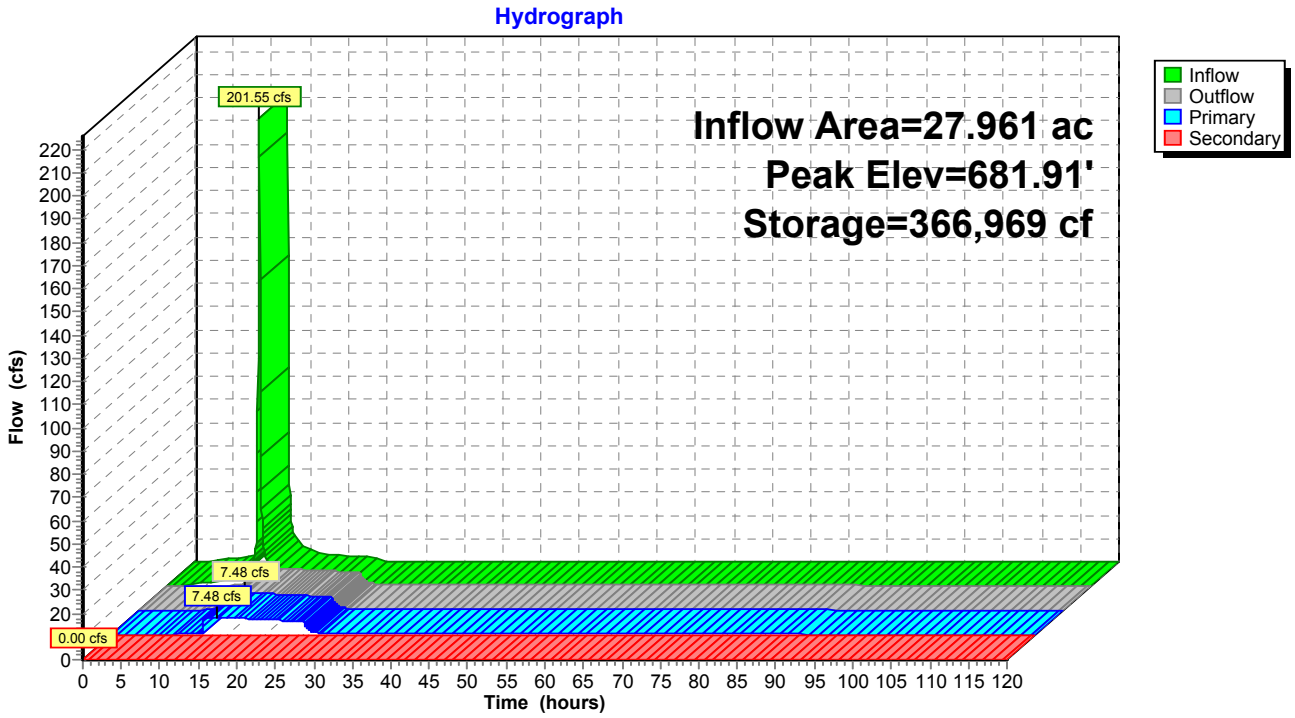

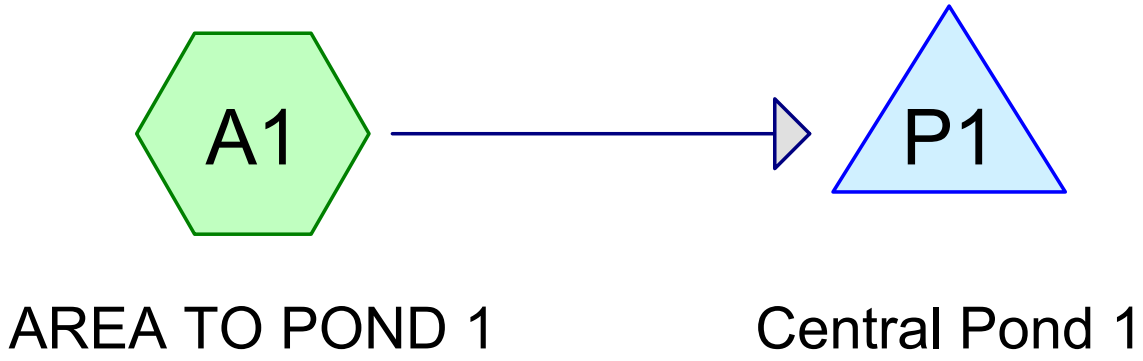

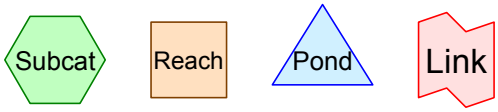

Routing Diagram for PROPOSED (100yr Tailwater)
Prepared by Hewlett-Packard Company, Printed 4/20/2016
HydroCAD® 10.00-14 s/n 07894 © 2015 HydroCAD Software Solutions LLC

Summary for Subcatchment A1: AREA TO POND 1

Runoff = 201.55 cfs @ 12.01 hrs, Volume= 12.448 af, Depth= 5.34"

Runoff by SCS TR-20 method, UH=SCS, Weighted-CN, Time Span= 0.00-120.00 hrs, dt= 0.05 hrs
Type II 24-hr 100-YEAR Rainfall=5.93"

Area (sf)	CN	Description
425,000	98	Roofs, HSG C
600,000	98	Paved parking, HSG C
150,000	74	>75% Grass cover, Good, HSG C
43,000	98	Water Surface, HSG C
1,218,000	95	Weighted Average
150,000	74	12.32% Pervious Area
1,068,000	98	87.68% Impervious Area

Tc (min)	Length (feet)	Slope (ft/ft)	Velocity (ft/sec)	Capacity (cfs)	Description
10.0					**Direct Entry,**

Subcatchment A1: AREA TO POND 1

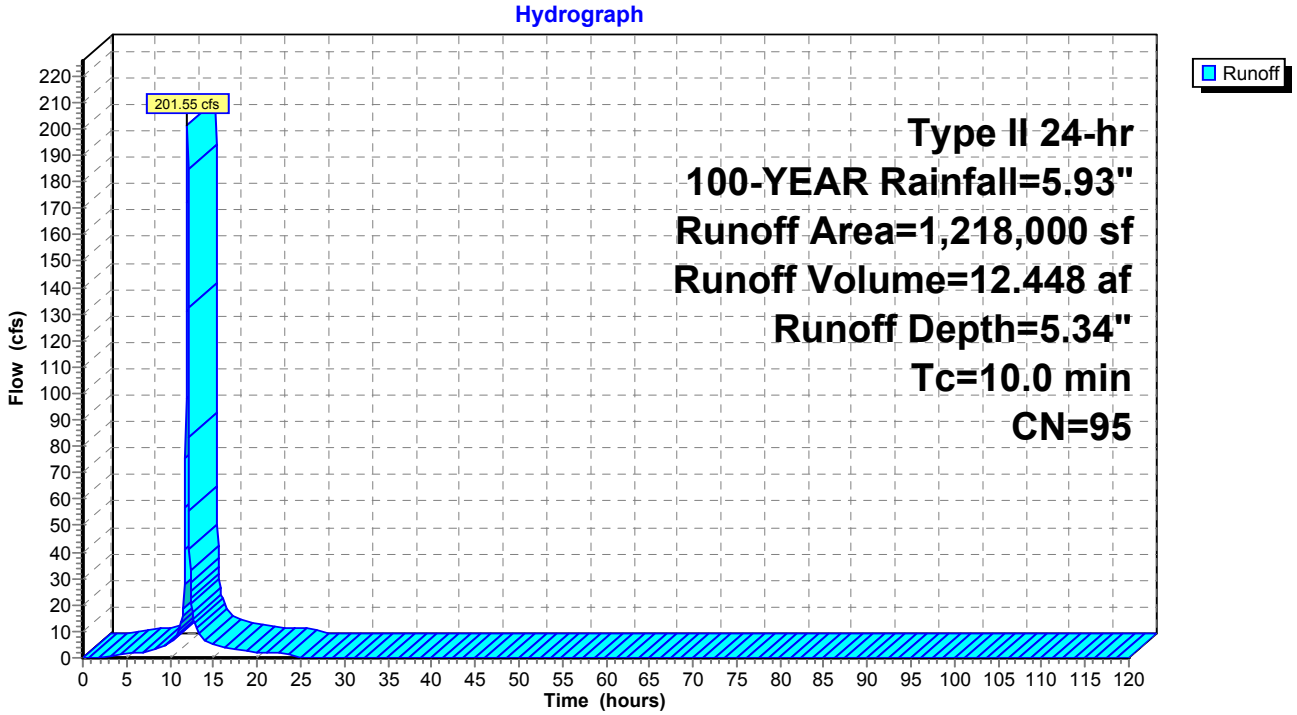

Summary for Pond P1: Central Pond 1

Inflow Area = 27.961 ac, 87.68% Impervious, Inflow Depth = 5.34" for 100-YEAR event
Inflow = 201.55 cfs @ 12.01 hrs, Volume= 12.448 af
Outflow = 5.75 cfs @ 14.48 hrs, Volume= 8.901 af, Atten= 97%, Lag= 148.2 min
Primary = 5.75 cfs @ 14.48 hrs, Volume= 8.901 af
Secondary = 0.00 cfs @ 0.00 hrs, Volume= 0.000 af

Routing by Stor-Ind method, Time Span= 0.00-120.00 hrs, dt= 0.05 hrs
Peak Elev= 682.24' @ 14.48 hrs Surf.Area= 73,188 sf Storage= 391,243 cf

Plug-Flow detention time= 768.7 min calculated for 8.901 af (72% of inflow)
Center-of-Mass det. time= 674.7 min (1,438.6 - 763.9)

Volume	Invert	Avail.Storage	Storage Description
#1	675.50'	526,839 cf	**Custom Stage Data (Prismatic)** Listed below (Recalc)

Elevation (feet)	Surf.Area (sq-ft)	Inc.Store (cubic-feet)	Cum.Store (cubic-feet)
675.50	42,870	0	0
684.00	81,092	526,839	526,839

Device	Routing	Invert	Outlet Devices
#1	Primary	675.50'	**15.0" Round Culvert** L= 393.5' RCP, end-section conforming to fill, Ke= 0.500 Inlet / Outlet Invert= 675.50' / 674.50' S= 0.0025 '/' Cc= 0.900 n= 0.013 Concrete pipe, straight & clean, Flow Area= 1.23 sf
#2	Secondary	683.00'	**20.0' long x 10.0' breadth Broad-Crested Rectangular Weir** Head (feet) 0.20 0.40 0.60 0.80 1.00 1.20 1.40 1.60 Coef. (English) 2.49 2.56 2.70 2.69 2.68 2.69 2.67 2.64
#3	Device 1	675.50'	**4.5" Vert. Orifice/Grate** C= 0.600
#4	Device 1	679.20'	**36.0" Horiz. Orifice/Grate** C= 0.600 Limited to weir flow at low heads

Primary OutFlow Max=5.75 cfs @ 14.48 hrs HW=682.24' TW=678.60' (Fixed TW Elev= 678.60')
└─**1=Culvert** (Outlet Controls 5.75 cfs @ 4.69 fps)
  ├─**3=Orifice/Grate** (Passes < 1.01 cfs potential flow)
  └─**4=Orifice/Grate** (Passes < 59.36 cfs potential flow)

Secondary OutFlow Max=0.00 cfs @ 0.00 hrs HW=675.50' TW=678.60' (Fixed TW Elev= 678.60')
└─**2=Broad-Crested Rectangular Weir** (Controls 0.00 cfs)

Pond P1: Central Pond 1

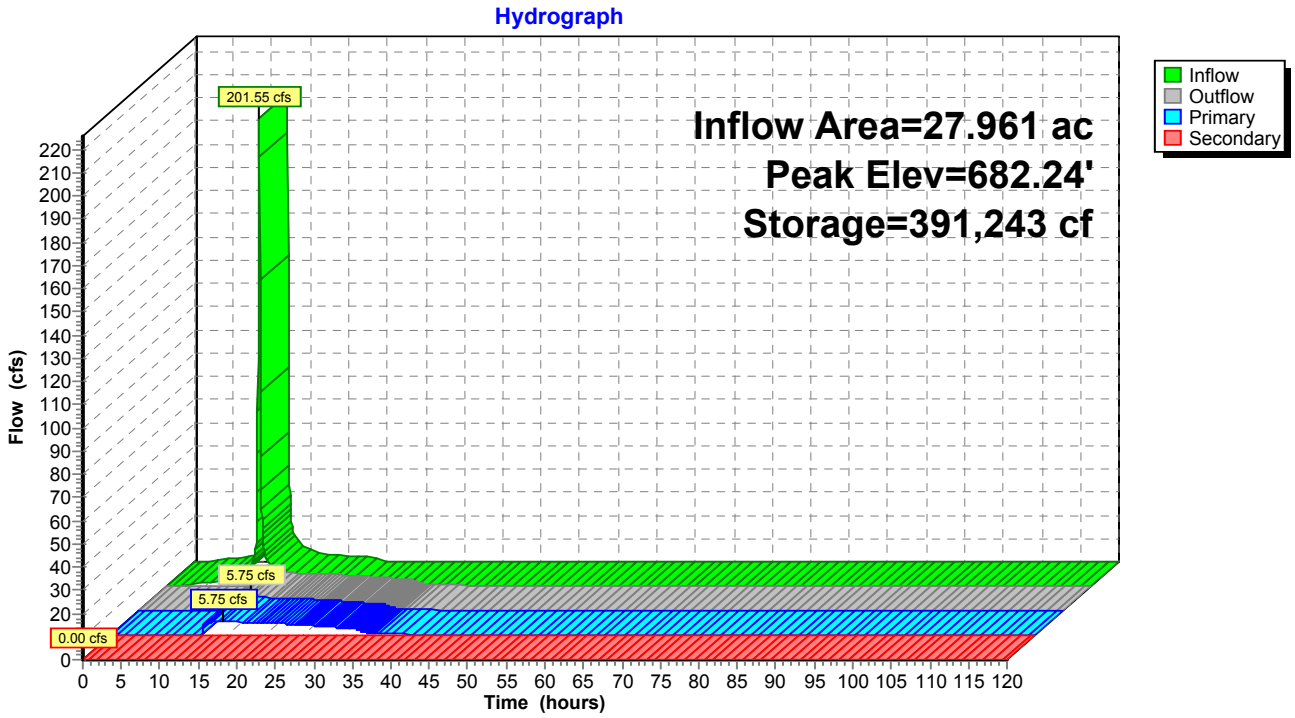

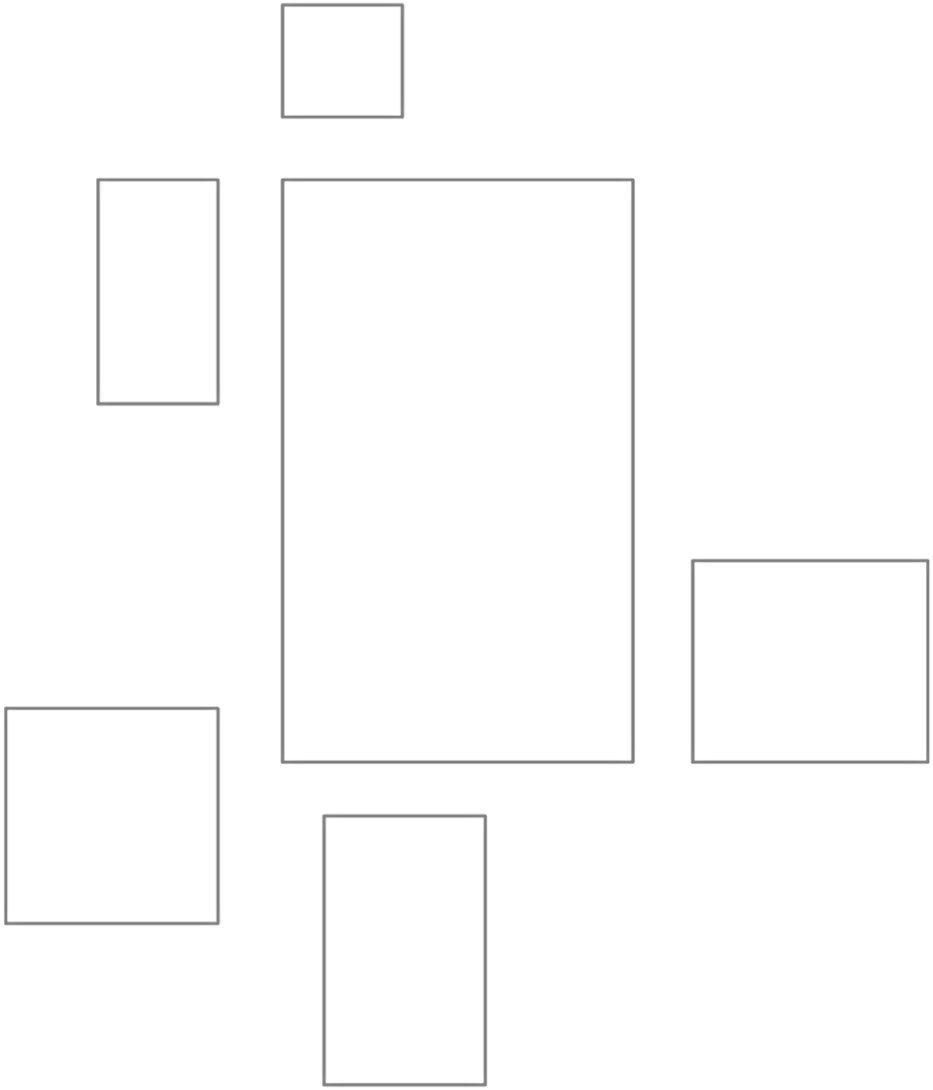

4 Appendix

MODEL - InputData

Data file name: Z:\Projects\2012\117.00A-WI\DESIGN\SWMP\SLAMM\MAJESTIC MODEL.mdb
WinSLAMM Version 10.1.6
Rain file name: C:\WinSLAMM Files\Rain Files\WI Milwaukee 69.RAN
Particulate Solids Concentration file name: C:\WinSLAMM Files\v10.1 WI_AVG01.pscx
Runoff Coefficient file name: C:\WinSLAMM Files\WI_SL06 Dec06.rsvx
Residential Street Delivery file name: C:\WinSLAMM Files\WI_Res and Other Urban Dec06.std
Institutional Street Delivery file name: C:\WinSLAMM Files\WI_Com Inst Indust Dec06.std
Commercial Street Delivery file name: C:\WinSLAMM Files\WI_Com Inst Indust Dec06.std
Industrial Street Delivery file name: C:\WinSLAMM Files\WI_Com Inst Indust Dec06.std
Other Urban Street Delivery file name: C:\WinSLAMM Files\WI_Res and Other Urban Dec06.std
Freeway Street Delivery file name: C:\WinSLAMM Files\Freeway Dec06.std
Apply Street Delivery Files to Adjust the After Event Load Street Dirt Mass Balance: False
Pollutant Relative Concentration file name: C:\WinSLAMM Files\WI_GEO03.ppdx
Cost Data file name:
Seed for random number generator: -42
Study period starting date: 01/05/69 Study period ending date: 12/31/69
Start of Winter Season: 12/06 End of Winter Season: 03/26
Date: 04-20-2016 Time: 11:05:07
Site information:

LU# 1 - Industrial: Industrial 1 Total area (ac): 27.960
1 - Roofs 1: 9.760 ac. Pitched Connected Connected
13 - Paved Parking 1: 13.770 ac. Connected Connected
45 - Large Landscaped Areas 1: 3.440 ac. Normal Clayey Medium/High Density No Alleys
70 - Water Body Areas: 0.990 ac. No Alleys

Control Practice 1: Wet Detention Pond CP# 1 (DS) - DS Wet Pond # 1
Particle Size Distribution file name: Not needed - calculated by program
Initial stage elevation (ft): 5
Peak to Average Flow Ratio: 3.8
Maximum flow allowed into pond (cfs): No maximum value entered
Outlet Characteristics:
Outlet type: Orifice 1
1. Orifice diameter (ft): 0.38
2. Number of orifices: 1
3. Invert elevation above datum (ft): 5
Outlet type: Broad Crested Weir
1. Weir crest length (ft): 20
2. Weir crest width (ft): 18
3. Height of weir opening (cfs): 0
4. Height from datum to bottom of weir opening: 12.5
Outlet type: Vertical Stand Pipe
1. Stand pipe diameter (ft): 3
2. Stand pipe height above datum (ft): 8.5
Pond stage and surface area

Entry Number	Stage (ft)	Pond Area (acres)	Natural Seepage (in/hr)	Other Outflow (cfs)
0	0.00	0.0000	0.00	0.00
1	0.01	0.6000	0.00	0.00
2	4.00	0.7600	0.00	0.00
3	5.00	0.9800	0.00	0.00
4	5.50	1.0300	0.00	0.00
5	13.50	1.8600	0.00	0.00

MODEL - Output Summary

SLAMM for Windows Version 10.1.6
(c) Copyright Robert Pitt and John Voorhees 2012
All Rights Reserved

Data file name: Z:\Projects\2012\117.00A-WI\DESIGN\SWMP\SLAMM\MAJESTIC MODEL.mdb
Data file description:
Rain file name: C:\WinSLAMM Files\Rain Files\WI Milwaukee 69.RAN
Particulate Solids Concentration file name: C:\WinSLAMM Files\v10.1 WI_AVG01.pscx
Runoff Coefficient file name: C:\WinSLAMM Files\WI_SL06 Dec06.rsvx
Residential Street Delivery file name: C:\WinSLAMM Files\WI_Res and Other Urban Dec06.std
Institutional Street Delivery file name: C:\WinSLAMM Files\WI_Com Inst Indust Dec06.std
Commercial Street Delivery file name: C:\WinSLAMM Files\WI_Com Inst Indust Dec06.std
Industrial Street Delivery file name: C:\WinSLAMM Files\WI_Com Inst Indust Dec06.std
Other Urban Street Delivery file name: C:\WinSLAMM Files\WI_Res and Other Urban Dec06.std
Freeway Street Delivery file name: C:\WinSLAMM Files\Freeway Dec06.std
Pollutant Relative Concentration file name: C:\WinSLAMM Files\WI_GEO03.ppdx
Start of Winter Season: 12/06 End of Winter Season: 03/26
Model Run Start Date: 01/05/69 Model Run End Date: 12/31/69
Date of run: 04-20-2016 Time of run: 11:04:48
Total Area Modeled (acres): 27.960
Years in Model Run: 0.99

	Runoff Volume (cu ft)	Percent Runoff Volume Reduction	Particulate Solids Conc. (mg/L)	Particulate Solids Yield (lbs)	Percent Particulate Solids Reduction
Total of all Land Uses without Controls:	2.134E+06	-	140.0	18648	-
Outfall Total with Controls:	2.130E+06	0.19%	18.70	2487	86.66%
Annualized Total After Outfall Controls:	2.160E+06			2521	

PINNACLE ENGINEERING GROUP
Plan | Design | Deliver
www.pinnacle-engr.com

STORM SEWER COMPUTATIONS
FOR
MAJESTIC

PLEASANT PRAIRIE, WI

DESIGN BY: DCC
PROJECT NUMBER: 117.00A
DATE: 4/26/2016

DESIGN DATA

STRUCTURE DATA			DRAINAGE AREA AND FLOW DATA (Flow is determined by SPS 382.36)					PIPE DATA				PIPE CAPACITY INFORMATION (Pipe capacity is determined by Manning's Equation $Q = 1.486/n\ AR^{2/3}\ S^{1/2}$)					ELEVATIONS		
Pipe Run	Upstream Structure	Downstream Structure	Roof Area (sf)	Pvmt Area (sf)	Grass Area (sf)	Individual Flow Q (cfs)	Cumulative Flow (cfs)	Length (ft)	Diameter (in)	Slope (%)	Manning Coefficient	Required Drop (ft)	Actual Drop (ft)	Percent Full (%)	Actual Velocity (fps)	Max. Capacity (cfs)	Rim/Toc Up	Invert Up	Invert Down
	BC 14.1	CO 14.0	2434	0	0	0.21	0.21	45.00	10	6.04	0.012	0.00	2.72	8%	5.04	6.27	688.50	685.50	682.78
	CO 14.0	CB 15.0	0	0	0	0.00	0.21	83.50	10	1.00	0.012	0.01	0.84	14%	2.68	2.55	686.86	682.78	681.95
	CB 15.0	TEE 16.0	0	15762	0	1.08	1.90	28.20	15	0.50	0.012	0.02	0.14	41%	3.77	5.32	686.34	681.95	681.81
	TEE 16.0	TEE 16.5	0	0	0	0.00	2.37	49.80	15	0.50	0.012	0.06	0.25	48%	3.99	5.32	686.50	681.81	681.56
	TEE 16.5	TEE 17.0	0	0	0	0.00	2.95	50.10	15	0.50	0.012	0.09	0.25	57%	4.21	5.32	686.50	681.56	681.31
	TEE 17.0	CB 18.0	0	0	0	0.00	3.69	24.90	15	0.50	0.012	0.07	0.12	68%	4.42	5.32	686.50	681.31	681.18
	CB 18.0	TEE 18.5	0	13891	0	0.95	5.36	25.10	18	0.50	0.012	0.06	0.13	62%	4.87	8.66	686.34	681.18	681.06
	TEE 18.5	TEE 19.0	0	0	0	0.00	6.10	50.20	18	0.50	0.012	0.14	0.25	69%	5.01	8.66	686.50	681.06	680.81
	TEE 19.0	TEE 19.5	0	0	0	0.00	6.68	49.80	18	0.50	0.012	0.17	0.25	74%	5.09	8.66	686.50	680.81	680.56
	TEE 19.5	CB 20.0	0	0	0	0.00	7.15	28.00	18	0.50	0.012	0.11	0.14	79%	5.14	8.66	686.50	680.56	680.42
	CB 20.0	STM MH 22.0	0	26870	0	1.84	9.61	96.80	24	0.50	0.012	0.15	0.48	54%	5.66	18.64	686.34	680.42	679.93
	STM MH 22.0	CB 23.0	0	0	0	0.00	9.82	150.40	24	0.50	0.012	0.24	0.75	55%	5.69	18.64	687.32	679.93	679.18
	CB 23.0	CB 24.0	0	17114	0	1.17	12.27	205.30	24	0.70	0.012	0.51	1.44	53%	6.64	22.06	686.30	679.18	677.75
	CB 24.0	CB 25.0	0	65589	0	4.50	21.67	225.00	30	0.35	0.012	0.54	0.79	68%	5.86	28.28	682.80	677.75	676.96
	CB 25.0	CB 26.0	0	41738	0	2.86	30.46	225.00	36	0.35	0.012	0.40	0.79	61%	6.43	45.98	682.80	676.96	676.17
	CB 26.0	STM MH 27.1	0	44187	0	3.03	38.67	131.30	48	0.20	0.012	0.08	0.26	51%	5.58	74.86	682.80	676.17	675.91
	STM MH 27.1	ES 28.0	0	0	0	0.00	39.48	185.30	48	0.22	0.012	0.12	0.41	50%	5.81	78.51	685.33	675.91	675.50
	PIPE TO OUTFALL SPLIT INTO TWO PARALLEL RUNS OF 30" (SEE CALCS BELOW)																		
	CB 1.0	CB 2.0	0	39686	0	2.72	2.72	140.40	15	0.30	0.012	0.21	0.42	65%	3.39	4.12	683.40	679.12	678.70
	CB 2.0	CB 3.0	0	33348	0	2.29	8.98	225.00	24	0.20	0.012	0.30	0.45	73%	3.89	11.79	682.80	678.70	678.25
	CB 3.0	CB 4.0	0	40928	0	2.81	17.02	225.00	30	0.20	0.012	0.33	0.45	76%	4.55	21.38	682.80	678.25	677.80
	CB 4.0	CB 5.0	0	67179	0	4.61	25.75	185.40	36	0.20	0.012	0.24	0.37	72%	5.08	34.76	682.80	677.80	677.43
	CB 5.0	CB 6.0	0	11015	0	0.76	26.68	194.70	42	0.20	0.012	0.12	0.39	54%	5.18	52.43	685.51	677.43	677.04
	CB 6.0	CB 7.0	0	20912	0	1.43	28.12	152.90	42	0.20	0.012	0.10	0.31	56%	5.25	52.43	685.00	677.04	676.74
	CB 7.0	CB 8.0	0	18702	0	1.28	32.39	153.10	42	0.20	0.012	0.14	0.31	60%	5.37	52.43	685.00	676.74	676.43
	CB 8.0	CB 10.0	0	20927	0	1.43	33.82	281.50	48	0.21	0.012	0.13	0.59	47%	5.55	76.71	685.00	676.43	675.84
	CB 10.0	ES 11.0	0	42772	0	2.93	36.75	162.10	48	0.21	0.012	0.09	0.34	50%	5.67	76.71	682.50	675.84	675.50
	PIPE TO OUTFALL SPLIT INTO TWO PARALLEL RUNS OF 30" (SEE CALCS BELOW)																		
	BC 16.1	TEE 16.0	5475	0	0	0.47	0.47	48.90	10	7.56	0.012	0.02	3.70	12%	6.94	7.02	688.50	685.50	681.81
	BC 16.6	TEE 16.5	6790	0	0	0.58	0.58	48.90	10	8.07	0.012	0.03	3.95	14%	7.57	7.25	688.50	685.51	681.56
	BC 17.1	TEE 17.0	8633	0	0	0.74	0.74	49.00	10	8.57	0.012	0.05	4.20	16%	8.30	7.47	688.50	685.51	681.31
	BC 18.6	TEE 18.5	8637	0	0	0.74	0.74	49.00	10	9.08	0.012	0.05	4.45	16%	8.46	7.69	688.50	685.51	681.06
	BC 19.1	TEE 19.0	6788	0	0	0.58	0.58	49.00	10	9.59	0.012	0.03	4.70	13%	8.04	7.91	688.50	685.51	680.81
	BC 19.6	TEE 19.5	5475	0	0	0.47	0.47	49.00	10	10.10	0.012	0.02	4.95	11%	7.69	8.11	688.50	685.51	680.56
	BC 22.2	STM MH 22.0	2422	0	0	0.21	0.21	51.20	10	5.00	0.012	0.00	2.56	8%	4.71	5.71	688.50	685.50	682.94
	CB 27.0	STM MH 27.1		11783	0	0.81	0.81	93.00	10	3.00	0.012	0.11	2.79	25%	5.86	4.42	683.00	678.70	675.91
	CB 15.1	CB 15.0	0	8852	0	0.61	0.61	44.00	10	5.00	0.012	0.03	2.20	17%	6.47	5.71	688.86	684.15	681.95
	CB 18.1	CB 18.0	0	10549	0	0.72	0.72	44.00	10	6.00	0.012	0.04	2.64	18%	7.26	6.25	688.86	683.82	681.18
	CB 20.1	CB 20.0	0	8932	0	0.61	0.61	44.00	10	6.00	0.012	0.03	2.64	16%	6.92	6.25	688.86	683.06	680.42
	STM MH 27.1	STM MH 27.2	0	0	0	0.00	19.74	10.00	30	0.22	0.012	0.02	0.02	78%	4.79	22.42	685.33	675.91	675.89
	STM MH 27.2	ES 28.1	0	0	0	0.00	19.74	185.10	30	0.21	0.012	0.37	0.39	79%	4.69	21.90	685.13	675.89	675.50
	CB 10.0	STM MH 10.1	0	0	0	0.00	18.38	10.00	30	0.20	0.012	0.02	0.02	79%	4.58	21.38	682.50	675.84	675.82
	STM MH 10.1	ES 11.0	0	0	0	0.00	18.38	162.20	30	0.20	0.012	0.28	0.32	79%	4.58	21.38	682.60	675.82	675.50

PINNACLE ENGINEERING GROUP
Plan | Design | Deliver
www.pinnacle-engr.com

STORM SEWER COMPUTATIONS
FOR
MAJESTIC

PLEASANT PRAIRIE, WI

DESIGN BY: DCC
PROJECT NUMBER: 117.00A
DATE: 4/26/2016

DESIGN DATA

STRUCTURE DATA			DRAINAGE AREA AND FLOW DATA (Flow is determined by SPS 382.36)					PIPE DATA				PIPE CAPACITY INFORMATION (Pipe capacity is determined by Manning's Equation $Q = 1.486/n\ AR^{2/3}\ S^{1/2}$)					ELEVATIONS		
Pipe Run	Upstream Structure	Downstream Structure	Roof Area (sf)	Pvmt Area (sf)	Grass Area (sf)	Individual Flow Q (cfs)	Cumulative Flow (cfs)	Length (ft)	Diameter (in)	Slope (%)	Manning Coefficient	Required Drop (ft)	Actual Drop (ft)	Percent Full (%)	Actual Velocity (fps)	Max. Capacity (cfs)	Rim/Toc Up	Invert Up	Invert Down
	BC 24.71	CO 24.7	4580	0	0	0.39	0.39	5.60	10	0.53	0.012	0.00	0.03	28%	2.56	1.86	688.50	682.00	681.97
	CO 24.7	TEE 24.4	0	0	0	0.00	0.39	54.30	10	1.50	0.012	0.01	0.81	19%	3.72	3.13	688.49	681.97	681.15
	TEE 24.4	TEE 24.3	0	0	0	0.00	0.99	52.00	10	1.50	0.012	0.09	0.78	38%	4.83	3.13	688.00	681.15	680.37
	TEE 24.3	TEE 24.2	0	0	0	0.00	1.87	52.10	10	1.50	0.012	0.32	0.78	61%	5.66	3.13	688.00	680.37	679.59
	TEE 24.2	STM MH 24.1	0	0	0	0.00	2.92	52.00	10	1.50	0.012	0.79	0.78	88%	6.08	3.13	688.00	679.59	678.81
	STM MH 24.1	CB 24.0	0	0	0	0.00	3.97	85.20	15	1.00	0.012	0.27	0.85	55%	5.88	7.53	684.50	678.81	677.96
	BC 24.11	STM MH 24.1	12217	0	0	1.05	1.05	5.00	10	10.00	0.012	0.01	0.50	20%	9.69	8.07	685.00	682.00	681.50
	BC 24.21	TEE 24.2	12217	0	0	1.05	1.05	5.00	10	48.19	0.012	0.01	2.41	11%	16.89	17.72	685.00	682.00	679.59
	BC 24.31	TEE 24.3	10268	0	0	0.88	0.88	5.00	10	32.64	0.012	0.01	1.63	12%	14.00	14.59	685.00	682.01	680.37
	BC 24.41	TEE 24.4	7021	0	0	0.60	0.60	5.00	10	17.00	0.012	0.00	0.85	11%	9.95	10.53	685.00	682.00	681.15
	BC 25.51	CO 25.5	12217	0	0	1.05	1.05	5.00	10	30.68	0.012	0.01	1.53	13%	14.41	14.14	685.00	682.00	680.47
	CO 25.5	TEE 25.3	0	0	0	0.00	1.05	52.00	10	2.00	0.012	0.10	1.04	35%	5.44	3.61	684.48	680.47	679.43
	TEE 25.3	TEE 25.2	0	0	0	0.00	2.09	52.00	10	2.00	0.012	0.40	1.04	59%	6.49	3.61	684.50	679.43	678.39
	TEE 25.2	STM MH 25.1	0	0	0	0.00	3.14	52.00	10	2.00	0.012	0.91	1.04	82%	6.99	3.61	684.50	678.39	677.35
	STM MH 25.1	CB 25.0	0	0	0	0.00	5.23	85.80	18	0.29	0.012	0.18	0.25	76%	3.90	6.59	684.48	677.35	677.10
	BC 25.31	TEE 25.3	12217	0	0	1.05	1.05	5.00	10	32.77	0.012	0.01	1.64	13%	14.75	14.62	685.00	681.07	679.43
	BC 25.21	TEE 25.2	12217	0	0	1.05	1.05	5.00	10	53.96	0.012	0.01	2.70	11%	17.59	18.76	685.00	681.09	678.39
	BC 25.11	STM MH 25.1	12217	0	0	1.05	1.05	5.00	10	4.03	0.012	0.01	0.20	27%	7.01	5.13	685.00	682.00	681.80
	BC 25.61	CO 25.6	12217	0	0	1.05	1.05	5.10	10	27.15	0.012	0.01	1.38	14%	13.80	13.30	685.00	682.00	680.62
	CO 25.6	STM MH 25.1	0	0	0	0.00	1.05	52.00	10	6.29	0.012	0.10	3.27	23%	8.22	6.40	684.48	680.62	677.35
	BC 26.41	CO 26.4	12217	0	0	1.05	1.05	5.00	10	1.00	0.012	0.01	0.05	46%	4.22	2.55	685.00	681.99	681.94
	CO 26.4	TEE 26.3	0	0	0	0.00	1.05	52.00	10	2.00	0.012	0.10	1.04	35%	5.44	3.61	684.48	681.94	680.90
	TEE 26.3	TEE 26.2	0	0	0	0.00	2.09	52.00	10	2.00	0.012	0.40	1.04	59%	6.49	3.61	684.50	680.90	679.86
	TEE 26.2	STM MH 26.1	0	0	0	0.00	3.14	52.00	10	2.00	0.012	0.91	1.04	82%	6.99	3.61	684.50	679.86	678.82
	STM MH 26.1	CB 26.0	0	0	0	0.00	5.18	88.20	15	3.00	0.012	0.48	2.65	44%	9.49	13.04	684.48	678.82	676.17
	BC 26.31	TEE 26.3	12217	0	0	1.05	1.05	5.00	10	21.61	0.012	0.01	1.08	15%	12.74	11.87	685.00	681.98	680.90
	BC 26.21	TEE 26.2	12217	0	0	1.05	1.05	5.00	10	37.16	0.012	0.01	1.86	12%	15.42	15.56	685.00	681.71	679.86
	BC 26.11	STM MH 26.1	10271	0	0	0.88	0.88	5.00	10	5.99	0.012	0.01	0.30	21%	7.68	6.25	685.00	682.00	681.70
	BC 26.71	CO 26.7	2040	0	0	0.17	0.17	5.00	10	1.60	0.012	0.00	0.08	11%	3.00	3.23	688.50	682.00	681.92
	CO 26.7	TEE 26.6	0	0	0	0.00	0.17	59.10	10	1.90	0.012	0.00	1.12	10%	3.19	3.52	688.39	681.92	680.79
	TEE 26.6	TEE 26.5	0	0	0	0.00	0.55	52.00	10	1.90	0.012	0.03	0.99	23%	4.46	3.52	688.00	680.79	679.80
	TEE 26.5	STM MH 26.1	0	0	0	0.00	1.16	52.00	10	1.90	0.012	0.12	0.99	39%	5.48	3.52	684.50	679.80	678.82
	BC 26.61	TEE 26.6	4420	0	0	0.38	0.38	5.00	10	24.28	0.012	0.00	1.21	7%	9.81	12.58	685.00	682.01	680.79
	BC 26.51	TEE 26.5	7021	0	0	0.60	0.60	5.00	10	44.00	0.012	0.00	2.20	8%	13.88	16.94	685.00	682.00	679.80

PINNACLE ENGINEERING GROUP
Plan | Design | Deliver
www.pinnacle-engr.com

STORM SEWER COMPUTATIONS
FOR
MAJESTIC

PLEASANT PRAIRIE, WI

DESIGN BY: DCC
PROJECT NUMBER: 117.00A
DATE: 4/26/2016

DESIGN DATA

STRUCTURE DATA			DRAINAGE AREA AND FLOW DATA (Flow is determined by SPS 382.36)					PIPE DATA				PIPE CAPACITY INFORMATION (Pipe capacity is determined by Manning's Equation $Q = 1.486/n\ AR^{2/3}\ S^{1/2}$)					ELEVATIONS		
Pipe Run	Upstream Structure	Downstream Structure	Roof Area (sf)	Pvmt Area (sf)	Grass Area (sf)	Individual Flow Q (cfs)	Cumulative Flow (cfs)	Length (ft)	Diameter (in)	Slope (%)	Manning Coefficient	Required Drop (ft)	Actual Drop (ft)	Percent Full (%)	Actual Velocity (fps)	Max. Capacity (cfs)	Rim/Toc Up	Invert Up	Invert Down
	BC 8.31	CO 8.3	8633	0	0	0.74	0.74	36.80	10	4.10	0.012	0.04	1.51	21%	6.39	5.17	688.50	685.50	683.99
	CO 8.3	TEE 8.2	0	0	0	0.00	0.74	50.10	10	4.00	0.012	0.05	2.00	21%	6.33	5.11	686.92	683.99	681.99
	TEE 8.2	STM MH 8.1	0	0	0	0.00	1.32	49.90	10	4.00	0.012	0.15	2.00	33%	7.46	5.11	687.00	681.99	679.99
	STM MH 8.1	CB 8.0	0	0	0	0.00	1.79	59.30	10	6.00	0.012	0.34	3.56	35%	9.39	6.25	687.00	679.99	676.43
	BC 8.21	TEE 8.2	6792	0	0	0.58	0.58	36.80	10	9.55	0.012	0.02	3.51	13%	8.04	7.89	688.50	685.50	681.99
	BC 8.11	STM MH 8.1	5473	0	0	0.47	0.47	36.80	10	14.99	0.012	0.01	5.52	10%	8.83	9.89	688.50	685.51	679.99
	BC 7.31	CO 7.3	5473	0	0	0.47	0.47	36.80	10	5.14	0.012	0.01	1.89	14%	6.06	5.79	688.50	685.50	683.61
	CO 7.3	TEE 7.2	0	0	0	0.00	0.47	49.90	10	4.00	0.012	0.02	2.00	15%	5.54	5.11	687.00	683.61	681.61
	TEE 7.2	STM MH 7.1	0	0	0	0.00	1.05	48.80	10	4.00	0.012	0.10	1.95	28%	6.99	5.11	687.00	681.61	679.66
	STM MH 7.1	CB 7.0	0	0	0	0.00	1.79	58.40	10	5.00	0.012	0.33	2.92	37%	8.78	5.71	686.93	679.66	676.74
	BC 7.21	TEE 7.2	6792	0	0	0.58	0.58	36.80	10	10.58	0.012	0.02	3.89	13%	8.33	8.30	688.50	685.50	681.61
	BC 7.11	STM MH 7.1	8631	0	0	0.74	0.74	36.80	10	15.89	0.012	0.04	5.85	13%	10.32	10.18	688.50	685.51	679.66
	BC 5.1	CB 5.0	2045	0	0	0.18	0.18	90.00	10	4.45	0.012	0.00	4.01	7%	4.30	5.39	688.50	685.51	681.50
	BC 4.31	CO 4.3	4420	0	0	0.38	0.38	5.00	10	0.40	0.012	0.00	0.02	30%	2.29	1.61	688.50	682.01	681.99
	CO 4.3	TEE 4.2	0	0	0	0.00	0.38	52.00	10	1.25	0.012	0.01	0.65	20%	3.45	2.85	688.21	681.99	681.34
	TEE 4.2	TEE 4.6	0	0	0	0.00	0.98	52.00	10	1.25	0.012	0.09	0.65	40%	4.50	2.85	684.50	681.34	680.69
	TEE 4.6	STM MH 4.1	0	0	0	0.00	1.86	52.00	10	1.25	0.012	0.32	0.65	65%	5.27	2.85	684.50	680.69	680.04
	STM MH 4.1	CB 4.0	0	0	0	0.00	4.12	89.60	15	2.50	0.012	0.31	2.24	40%	8.35	11.90	684.38	680.04	677.80
	BC 4.21	TEE 4.2	7020	0	0	0.60	0.60	5.00	10	13.22	0.012	0.00	0.66	12%	9.11	9.28	685.00	682.00	681.34
	BC 4.61	TEE 4.6	10273	0	0	0.88	0.88	5.00	10	26.20	0.012	0.01	1.31	12%	12.97	13.07	685.00	682.00	680.69
	BC 4.11	STM MH 4.1	12222	0	0	1.05	1.05	5.00	10	8.02	0.012	0.01	0.40	21%	8.96	7.23	685.00	682.00	681.60
	BC 4.51	CO 4.5	12222	0	0	1.05	1.05	5.00	10	8.00	0.012	0.01	0.40	21%	8.95	7.22	685.00	682.00	681.60
	CO 4.5	TEE 4.4	0	0	0	0.00	1.05	52.00	10	1.50	0.012	0.10	0.78	39%	4.89	3.13	684.48	681.60	680.82
	TEE 4.4	STM MH 4.1	0	0	0	0.00	2.09	52.00	10	1.50	0.012	0.41	0.78	66%	5.80	3.13	684.50	680.82	680.04
	BC 4.41	TEE 4.4	12222	0	0	1.05	1.05	5.00	10	23.67	0.012	0.01	1.18	15%	13.15	12.42	685.00	682.01	680.82
	BC 3.51	CO 3.5	12222	0	0	1.05	1.05	5.00	10	4.01	0.012	0.01	0.20	27%	6.99	5.11	685.00	682.00	681.80
	CO 3.5	TEE 3.3	0	0	0	0.00	1.05	52.00	10	2.00	0.012	0.10	1.04	35%	5.44	3.61	684.48	681.80	680.76
	TEE 3.3	TEE 3.2	0	0	0	0.00	2.09	52.00	10	2.00	0.012	0.41	1.04	59%	6.49	3.61	684.50	680.76	679.72
	TEE 3.2	STM MH 3.1	0	0	0	0.00	3.14	52.00	10	2.00	0.012	0.91	1.04	82%	6.99	3.61	684.50	679.72	678.68
	STM MH 3.1	CB 3.0	0	0	0	0.00	5.24	85.80	18	0.50	0.012	0.18	0.43	61%	4.85	8.66	684.48	678.68	678.25
	BC 3.31	TEE 3.3	12222	0	0	1.05	1.05	5.00	10	24.87	0.012	0.01	1.24	14%	13.39	12.73	685.00	682.01	680.76
	BC 3.21	TEE 3.2	12222	0	0	1.05	1.05	5.00	10	45.60	0.012	0.01	2.28	12%	16.57	17.24	685.00	682.00	679.72
	BC 3.11	STM MH 3.1	12222	0	0	1.05	1.05	5.00	10	4.41	0.012	0.01	0.22	27%	7.24	5.36	685.00	682.00	681.78
	BC 3.61	CO 3.6	12222	0	0	1.05	1.05	5.00	10	9.23	0.012	0.01	0.46	20%	9.42	7.76	685.00	682.00	681.54
	CO 3.6	STM MH 3.1	0	0	0	0.00	1.05	52.00	10	5.50	0.012	0.10	2.86	24%	7.83	5.99	684.48	681.54	678.68

PINNACLE ENGINEERING GROUP
Plan | Design | Deliver
www.pinnacle-engr.com

STORM SEWER COMPUTATIONS
FOR
MAJESTIC

PLEASANT PRAIRIE, WI

DESIGN BY: DCC
PROJECT NUMBER: 117.00A
DATE: 4/26/2016

DESIGN DATA

STRUCTURE DATA			DRAINAGE AREA AND FLOW DATA (Flow is determined by SPS 382.36)					PIPE DATA				PIPE CAPACITY INFORMATION (Pipe capacity is determined by Manning's Equation $Q = 1.486/n\ AR^{2/3}\ S^{1/2}$)					ELEVATIONS		
Pipe Run	Upstream Structure	Downstream Structure	Roof Area (sf)	Pvmt Area (sf)	Grass Area (sf)	Individual Flow Q (cfs)	Cumulative Flow (cfs)	Length (ft)	Diameter (in)	Slope (%)	Manning Coefficient	Required Drop (ft)	Actual Drop (ft)	Percent Full (%)	Actual Velocity (fps)	Max. Capacity (cfs)	Rim/Toc Up	Invert Up	Invert Down
	BC 2.71	CO 2.7	4628	0	0	0.40	0.40	5.00	10	0.50	0.012	0.00	0.03	29%	2.52	1.81	685.00	682.00	681.98
	CO 2.7	TEE 2.4	0	0	0	0.00	0.40	53.70	10	1.42	0.012	0.01	0.76	20%	3.66	3.04	688.26	681.98	681.22
	TEE 2.4	TEE 2.3	0	0	0	0.00	1.00	52.00	10	1.42	0.012	0.09	0.74	39%	4.74	3.04	688.00	681.22	680.48
	TEE 2.3	TEE 2.2	0	0	0	0.00	1.88	52.00	10	1.42	0.012	0.33	0.74	62%	5.55	3.04	684.50	680.48	679.74
	TEE 2.2	STM MH 2.1	0	0	0	0.00	2.93	52.00	10	1.42	0.012	0.79	0.74	91%	5.89	3.04	684.50	679.74	679.00
	STM MH 2.1	CB 2.0	0	0	0	0.00	3.97	85.20	15	0.35	0.012	0.27	0.30	84%	3.84	4.45	684.48	679.00	678.70
	BC 2.41	TEE 2.4	7020	0	0	0.60	0.60	5.00	10	15.58	0.012	0.00	0.78	11%	9.64	10.08	685.00	682.00	681.22
	BC 2.31	TEE 2.3	10273	0	0	0.88	0.88	5.00	10	30.40	0.012	0.01	1.52	12%	13.65	14.08	685.00	682.00	680.48
	BC 2.21	TEE 2.2	12222	0	0	1.05	1.05	5.00	10	45.30	0.012	0.01	2.27	12%	16.55	17.18	685.00	682.01	679.74
	BC 2.11	STM MH 2.1	12222	0	0	1.05	1.05	5.00	10	5.00	0.012	0.01	0.25	25%	7.57	5.71	685.00	682.00	681.75
	ES 29.2	STM MH 29.1	0	50	0	0.00	0.00	155.60	15	1.68	0.012	0.00	2.61	0%	0.88	9.76	694.84	692.00	689.39
	STM MH 29.1	ES 29.0	0	50	0	0.00	0.01	136.80	42	0.20	0.012	0.00	0.27	0%	0.44	52.43	694.00	685.77	685.50
	CB 23.2	CB 23.1	0	50	0	0.00	0.00	133.90	10	3.00	0.012	0.00	4.02	1%	1.14	4.42	691.94	686.73	682.71
	CB 23.1	CB 23.0	0	18605	0	1.28	1.28	83.80	10	4.21	0.012	0.24	3.53	31%	7.53	5.24	687.51	682.71	679.18
	CB 24.10	CB 24.9	0	4902	0	0.34	0.34	8.00	10	1.00	0.012	0.00	0.08	20%	3.08	2.55	683.14	679.96	679.88
	CB 24.9	CB 24.0	0	8784	0	0.60	0.94	112.00	10	1.91	0.012	0.18	2.14	33%	5.19	3.53	683.06	679.88	677.75
	CB 25.7	CB 25.0	0	10125	0	0.69	0.69	112.00	10	1.50	0.012	0.10	1.68	29%	4.38	3.13	683.04	678.64	676.96
	CB 7.7	CB 7.6	0	8708	0	0.60	0.60	108.00	10	2.00	0.012	0.07	2.16	24%	4.65	3.61	685.85	682.79	680.63
	CB 7.6	CB 7.0	0	8774	0	0.60	1.20	136.20	10	2.86	0.012	0.35	3.90	34%	6.43	4.32	685.35	680.63	676.74

PINNACLE ENGINEERING GROUP
Plan | Design | Deliver
www.pinnacle-engr.com

STORM SEWER COMPUTATIONS
FOR
MAJESTIC BADGER LOGISTICS CENTER

OFFSITE CULVERT 25 YEAR

SHEET 1 OF 1
DESIGN BY: AJS
PROJECT NUMBER: 117.00A
DATE: 4/26/2016

DESIGN DATA

STORM EVENT: 25 yr **DESIGN INTENSITY (I):** 1.9 in/hr

STRUCTURE DATA			DRAINAGE AREA AND FLOW DATA				PIPE DATA				PIPE CAPACITY INFORMATION					ELEVATIONS		
			Flow is determined by Rational Method Q = CIA								Pipe capacity is determined by Manning's Equation $Q = 1.486/n\ AR^{2/3}\ S^{1/2}$							
Pipe Run	Upstream Structure	Downstream Structure	Individual Acres A	Individual Coefficient C	Individual Flow Q (cfs)	Cumulative Flow (cfs)	Length (ft)	Diameter (in)	Slope (%)	Manning Coefficient	Required Drop (ft)	Actual Drop (ft)	Percent Full (%)	Actual Velocity (fps)	Max. Capacity (cfs)	Rim/Toc Up	Invert Up	Invert Down
	ES 29.2	MH 29.1	0.72	0.46	0.63	0.63	155.60	15	1.68	0.013	0.01	2.61	13%	4.01	9.01	105.00	691.36	688.75
Exist CMP	ES 29.3	MH 29.1	78.53	0.31	46.25	46.25	85.00	36	0.18	0.022	1.17	0.15	Surcharge	---	17.99	105.00	687.00	685.85
	MH 29.1	ES 29.0	0	0	0.00	46.88	136.80	42	0.2	0.01	0.18	0.27	72%	6.76	62.92		685.77	685.50

PINNACLE ENGINEERING GROUP
Plan | Design | Deliver
www.pinnacle-engr.com

STORM SEWER COMPUTATIONS
FOR
MAJESTIC BADGER LOGISTICS CENTER

OFFSITE CULVERT 100 YEAR

SHEET 1 OF 1
DESIGN BY: AJS
PROJECT NUMBER: 117.00A
DATE: 4/26/2016

DESIGN DATA

STORM EVENT: 100 yr **DESIGN INTENSITY (I):** 2.46 in/hr

STRUCTURE DATA			DRAINAGE AREA AND FLOW DATA				PIPE DATA				PIPE CAPACITY INFORMATION					ELEVATIONS		
			Flow is determined by Rational Method Q = CIA								Pipe capacity is determined by Manning's Equation $Q = 1.486/n\ AR^{2/3}\ S^{1/2}$							
Pipe Run	Upstream Structure	Downstream Structure	Individual Acres A	Individual Coefficient C	Individual Flow Q (cfs)	Cumulative Flow (cfs)	Length (ft)	Diameter (in)	Slope (%)	Manning Coefficient	Required Drop (ft)	Actual Drop (ft)	Percent Full (%)	Actual Velocity (fps)	Max. Capacity (cfs)	Rim/Toc Up	Invert Up	Invert Down
Prop HDPE	ES 29.2	MH 29.1	0.72	0.46	0.81	0.81	155.60	15	3	0.013	0.02	4.67	13%	5.32	12.04	691.00	692.42	687.75
Exist CMP	ES 29.3	MH 29.1	78.53	0.31	59.89	59.89	85.00	36	0.18	0.022	1.96	0.15	Surcharge	---	17.99	695.65	686.00	685.85
Prop HDPE	MH 29.1	ES 29.0	0	0	0.00	60.70	136.80	42	0.2	0.01	0.29	0.27	91%	6.91	62.92	689.00	685.85	685.58

**SEE MAJESTIC BADGER LOGISTICS CENTER OFF-SITE STORMWATER FLOW CALCS DATED 5-30-13 FOR ADDITONAL INFORMATION

Culvert Report

Hydraflow Express Extension for Autodesk® AutoCAD® Civil 3D® by Autodesk, Inc. Tuesday, Apr 26 2016

Circular Culvert

Invert Elev Dn (ft)	=	685.84
Pipe Length (ft)	=	85.62
Slope (%)	=	0.44
Invert Elev Up (ft)	=	686.22
Rise (in)	=	36.0
Shape	=	Circular
Span (in)	=	36.0
No. Barrels	=	1
n-Value	=	0.024
Culvert Type	=	Circular Corrugate Metal Pipe
Culvert Entrance	=	Headwall
Coeff. K,M,c,Y,k	=	0.0078, 2, 0.0379, 0.69, 0.5

Embankment

Top Elevation (ft)	=	696.00
Top Width (ft)	=	36.00
Crest Width (ft)	=	100.00

Calculations

Qmin (cfs)	=	46.49
Qmax (cfs)	=	60.20
Tailwater Elev (ft)	=	0.00

Highlighted

Qtotal (cfs)	=	46.49
Qpipe (cfs)	=	46.49
Qovertop (cfs)	=	0.00
Veloc Dn (ft/s)	=	8.29
Veloc Up (ft/s)	=	6.58
HGL Dn (ft)	=	688.06
HGL Up (ft)	=	690.05
Hw Elev (ft)	=	691.05
Hw/D (ft)	=	1.61
Flow Regime	=	Outlet Control

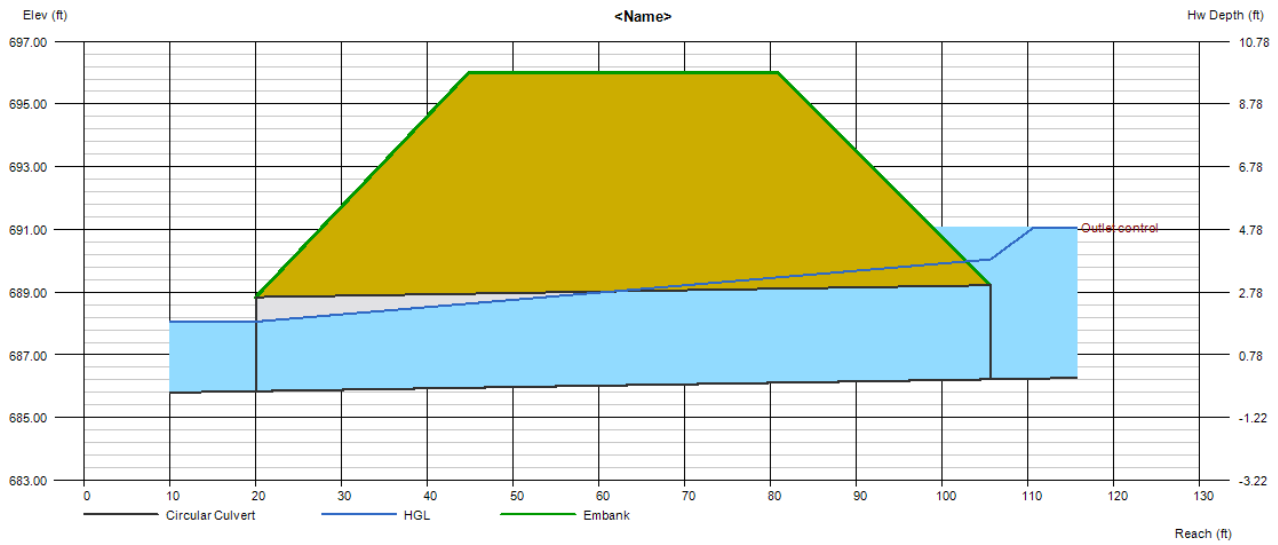

Culvert Report

Hydraflow Express Extension for Autodesk® AutoCAD® Civil 3D® by Autodesk, Inc. Tuesday, Apr 26 2016

Circular Culvert

Invert Elev Dn (ft)	=	685.84
Pipe Length (ft)	=	85.62
Slope (%)	=	0.44
Invert Elev Up (ft)	=	686.22
Rise (in)	=	36.0
Shape	=	Circular
Span (in)	=	36.0
No. Barrels	=	1
n-Value	=	0.024
Culvert Type	=	Circular Corrugate Metal Pipe
Culvert Entrance	=	Headwall
Coeff. K,M,c,Y,k	=	0.0078, 2, 0.0379, 0.69, 0.5

Embankment

Top Elevation (ft)	=	696.00
Top Width (ft)	=	36.00
Crest Width (ft)	=	100.00

Calculations

Qmin (cfs)	=	60.20
Qmax (cfs)	=	60.20
Tailwater Elev (ft)	=	0.00

Highlighted

Qtotal (cfs)	=	60.20
Qpipe (cfs)	=	60.20
Qovertop (cfs)	=	0.00
Veloc Dn (ft/s)	=	9.55
Veloc Up (ft/s)	=	8.52
HGL Dn (ft)	=	688.34
HGL Up (ft)	=	690.98
Hw Elev (ft)	=	692.67
Hw/D (ft)	=	2.15
Flow Regime	=	Outlet Control

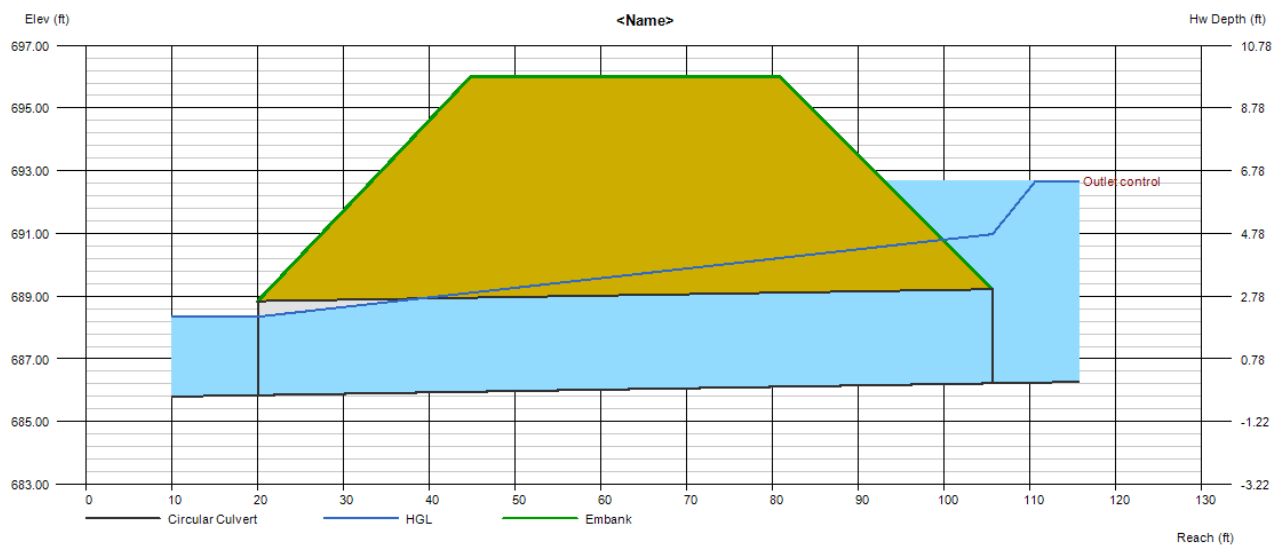

Culvert Report

Hydraflow Express Extension for Autodesk® AutoCAD® Civil 3D® by Autodesk, Inc. Tuesday, Apr 26 2016

Circular Culvert

Invert Elev Dn (ft)	=	686.00
Pipe Length (ft)	=	15.90
Slope (%)	=	6.29
Invert Elev Up (ft)	=	687.00
Rise (in)	=	36.0
Shape	=	Circular
Span (in)	=	36.0
No. Barrels	=	1
n-Value	=	0.011
Culvert Type	=	Circular Corrugate Metal Pipe
Culvert Entrance	=	Headwall
Coeff. K,M,c,Y,k	=	0.0078, 2, 0.0379, 0.69, 0.5

Embankment

Top Elevation (ft)	=	696.00
Top Width (ft)	=	5.00
Crest Width (ft)	=	50.00

Calculations

Qmin (cfs)	=	60.70
Qmax (cfs)	=	60.70
Tailwater Elev (ft)	=	690.98

Highlighted

Qtotal (cfs)	=	60.70
Qpipe (cfs)	=	60.70
Qovertop (cfs)	=	0.00
Veloc Dn (ft/s)	=	8.59
Veloc Up (ft/s)	=	8.59
HGL Dn (ft)	=	690.98
HGL Up (ft)	=	691.07
Hw Elev (ft)	=	691.77
Hw/D (ft)	=	1.59
Flow Regime	=	Inlet Control

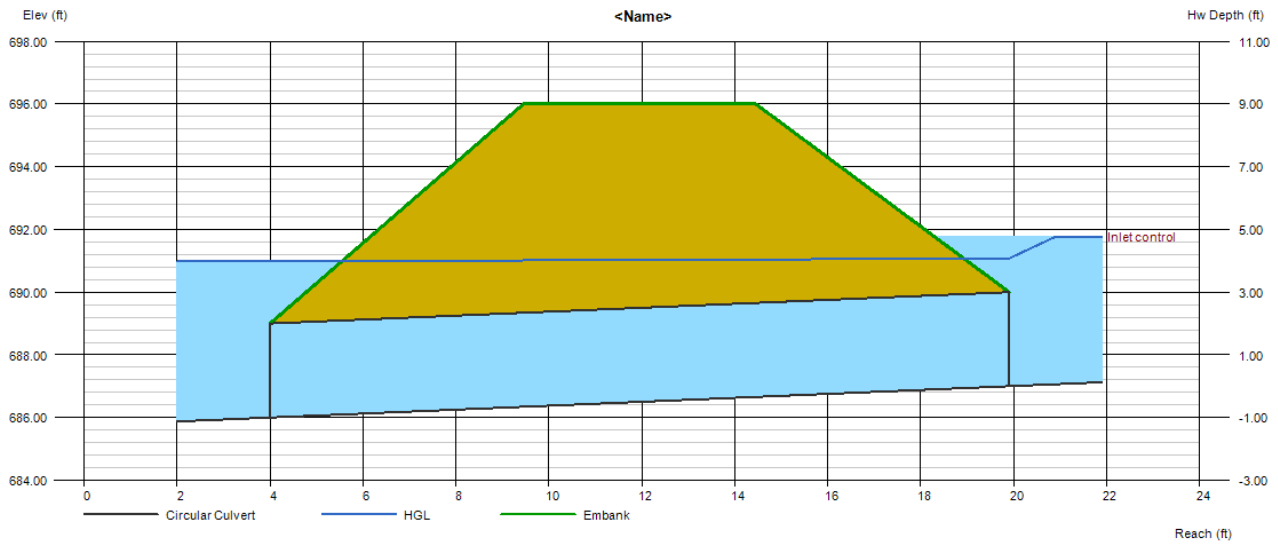

Culvert Report

Hydraflow Express Extension for Autodesk® AutoCAD® Civil 3D® by Autodesk, Inc. Tuesday, Apr 26 2016

Circular Culvert

Invert Elev Dn (ft)	=	686.00
Pipe Length (ft)	=	15.90
Slope (%)	=	6.29
Invert Elev Up (ft)	=	687.00
Rise (in)	=	36.0
Shape	=	Circular
Span (in)	=	36.0
No. Barrels	=	1
n-Value	=	0.011
Culvert Type	=	Circular Corrugate Metal Pipe
Culvert Entrance	=	Headwall
Coeff. K,M,c,Y,k	=	0.0078, 2, 0.0379, 0.69, 0.5

Embankment

Top Elevation (ft)	=	696.00
Top Width (ft)	=	5.00
Crest Width (ft)	=	50.00

Calculations

Qmin (cfs)	=	46.25
Qmax (cfs)	=	60.20
Tailwater Elev (ft)	=	690.05

Highlighted

Qtotal (cfs)	=	46.25
Qpipe (cfs)	=	46.25
Qovertop (cfs)	=	0.00
Veloc Dn (ft/s)	=	6.54
Veloc Up (ft/s)	=	6.54
HGL Dn (ft)	=	690.05
HGL Up (ft)	=	690.11
Hw Elev (ft)	=	690.60
Hw/D (ft)	=	1.20
Flow Regime	=	Inlet Control

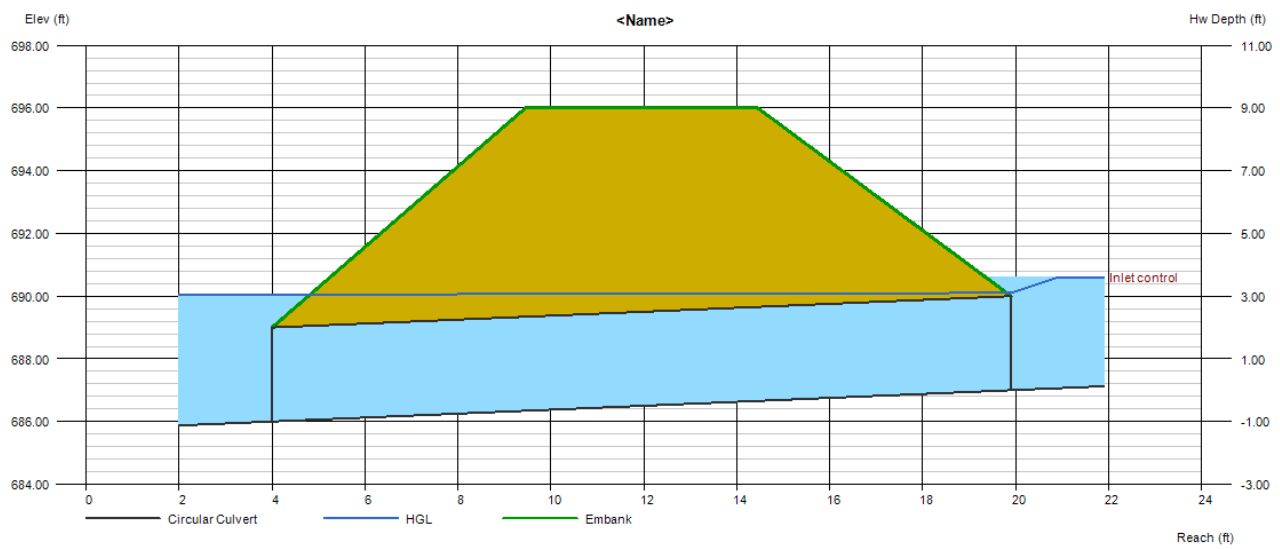

PROJECT NAME: Majestic

DATE: 3/22/2016 PEG PROJECT NO.: BY: AJS

DESCRIPTION: Off Site Storm Water Rational "C" Page 1

From Previous Design Calculation: Offsite Area 2 = 78.53 Ac
Offsite Area 3 = 0.72 Ac

"C" for off site Area 2:

Impervious Area = 1.52 Ac C = 0.9
Pervious Area = 77.01 Ac C = 0.3

$$\text{Composite } C = \frac{0.9 * 1.52}{78.53} + \frac{0.3 * 77.01}{78.53} =$$

$$0.0174 + 0.2942$$

$$C = 0.31$$

"C" for offsite Area 3

Impervious Area = 0.19 Ac C = 0.9
Pervious Area = 0.53 Ac C = 0.3

$$\text{Composite } C = \frac{0.9 * 0.19}{0.72} + \frac{0.3 * 0.53}{0.72}$$

$$= 0.24 + 0.22$$

$$C = 0.46$$

VILLAGE OF PLEASANT PRAIRIE

Filed _____ 20__
Fee Paid _____ 20__
PC Meeting Date _____ 20__
VB Meeting Date _____ 20
Approved _____ 20__
Denied _____ 20__

VILLAGE OF PLEASANT PRAIRIE
CERTIFIED SURVEY MAP APPLICATION

To: Village Plan Commission & Village Board of Trustees of the Village of Pleasant Prairie:

I, (We), the undersigned owner(s)/agent do hereby petition the Village Board to amend the Village of Pleasant Prairie Zoning Map as hereinafter requested.

It is petitioned that the following described property be subdivided with a Certified Survey Map (CSM)

The property petitioned to be subdivided is located at: East side of 88th Ave., Pleasant Prairie, WI

and is legally described as follows: See attached CSM

Tax Parcel Number(s): 92-4-122-162-0301

The property abuts or adjoins a State Trunk Highway	☐ Yes	☒ No
The property abuts or adjoins a County Trunk Highway	☒ Yes	☐ No
Municipal Sanitary Sewer is available to service said properties	☒ Yes	☐ No
Municipal Water is available to service said properties	☒ Yes	☐ No

I (We), have contacted the Community Development Department to arrange a pre-application meeting to discuss the proposed request with the Village staff to determine additional information that may be needed to consider the request.

I, (We), hereby certify that all the above statements and attachments submitted herewith are true and correct to the best of my knowledge.

PROPERTY OWNER: MAJESTIC REALTY CO.
Print Name: JOHN R BURROUGHS
Signature: John R. Burroughs
Address: 13191 CROSSROADS PKWY N., 6th FL
CITY OF INDUSTRY CA 91746
(City) (State) (Zip)
Phone: 562-948-4386
Fax: 562-699-4791
Date 4/25/16

OWNER'S AGENT:
Print Name: _____
Signature: _____
Address: _____
(City) (State) (Zip)
Phone: _____
Fax: _____
Date: _____

G. Consider the request of Patricia Soens for approval of a **Certified Survey Map** to subdivide vacant land locked properties and the lands adjacent neighbor properties generally located east of Cooper Road at the 8200 block.

Recommendation: Village staff recommends that the Plan Commission send a favorable recommendation to the Village Board to approve the **Certified Survey Map** subject to the comments and conditions presented in the Village Staff Report of May 23, 2016.

VILLAGE STAFF REPORT OF MAY 23, 2016

Consider the request of Patricia Soens for approval of a **Certified Survey Map** to subdivide vacant land locked properties and attach the lands to adjacent neighbor properties generally located east of Cooper Road at the 8200 block.

The petitioner is requesting to subdivide their vacant land locked properties (Tax Parcel Numbers 91-4-122-113-0044 and 91-4-122-113-0048) within the 8200 block of Cooper Road. Several of the adjacent property owners will be acquiring portions of the vacant property so that no land will remain land locked. The properties west of 50th Avenue are zoned R-5, Urban Single Family Residential and the properties east of 50th Avenue are zoned R-6, Urban Single Family Residential District.

- The property at 8201 Cooper Road (Tax Parcel Number 91-4-122-113 0042) owned by Helen Sampson will obtain portions of the vacant property to the south and east to form Lot 1 of the proposed CSM. Lot 1 will be 0.69 acres.
- The property at 8205 Cooper Road (Tax Parcel Number 91-4-122-113 0050) owned by Stanley and Dorothy Krifka will obtain portions of the vacant property to the north and east to form Lot 2 of the proposed CSM. Lot 3 will be 1.5 acres.
- The property at 8215 Cooper Road (Tax Parcel Number 91-4-122-113 0052) owned by Roxanne Patrick will obtain portions of the vacant property to the east to form Lot 3 of the proposed CSM. Lot 3 will be 1.12 acres.
- The property at 4910 83rd Street (Tax Parcel Number 91-4-122-113 0064) owned by John and Pamela O'Connell will obtain portions of the vacant property to the north to form Lot 4 of the proposed CSM. Lot 4 will be 0.72 acres.

The proposed land division conforms with the Village Zoning Ordinance, Land Division and Development Control Ordinance and the Village's Comprehensive Land Use Plan.

<u>The Village staff recommends approval of the CSM subject the above comments and the following conditions:</u>

1. See ***attached*** changes to be made to the CSM. A revised CSM shall be executed and submitted to the Village for Village signatures.
2. Any outstanding special assessments or outstanding taxes shall be paid prior to recording the CSM. Pursuant to the Village Records there are no outstanding special assessments or taxes due on the properties.
3. The CSM shall be executed by all parties and recorded at the Kenosha County Register of Deeds Office within 60 days of Village Board approval.

JWH
5-17-16

CERTIFIED SURVEY MAP NO. _____

PART OF THE NE 1/4 AND SE 1/4 OF THE SW 1/4 OF SECTION 11, TOWN 1 NORTH, RANGE 22 EAST, VILLAGE OF PLEASANT PRAIRE, COUNTY KENOSHA AND STATE OF WISCONSIN.

?spelling

what are street setbacks? show on CSM.

SURVEYOR

PATHFINDER SURVEYING INC.
P.O BOX 322
LAKE GENEVA, WI. 53147
WWW.PATHFINDERSURVEYING.NET
262-248-8303

OWNERS

SONES PROPERTIES LLC
DERECK DIGGINS & HELEN SAMPSON REVOCABLE TRUST
STANLEY & DOROTHY KRIFKA
ROBRT C. PATRICK SR. & ROXANNE PATRICK
JOHN JR. & PAMELA O'CONNELL

RECORDING DATA

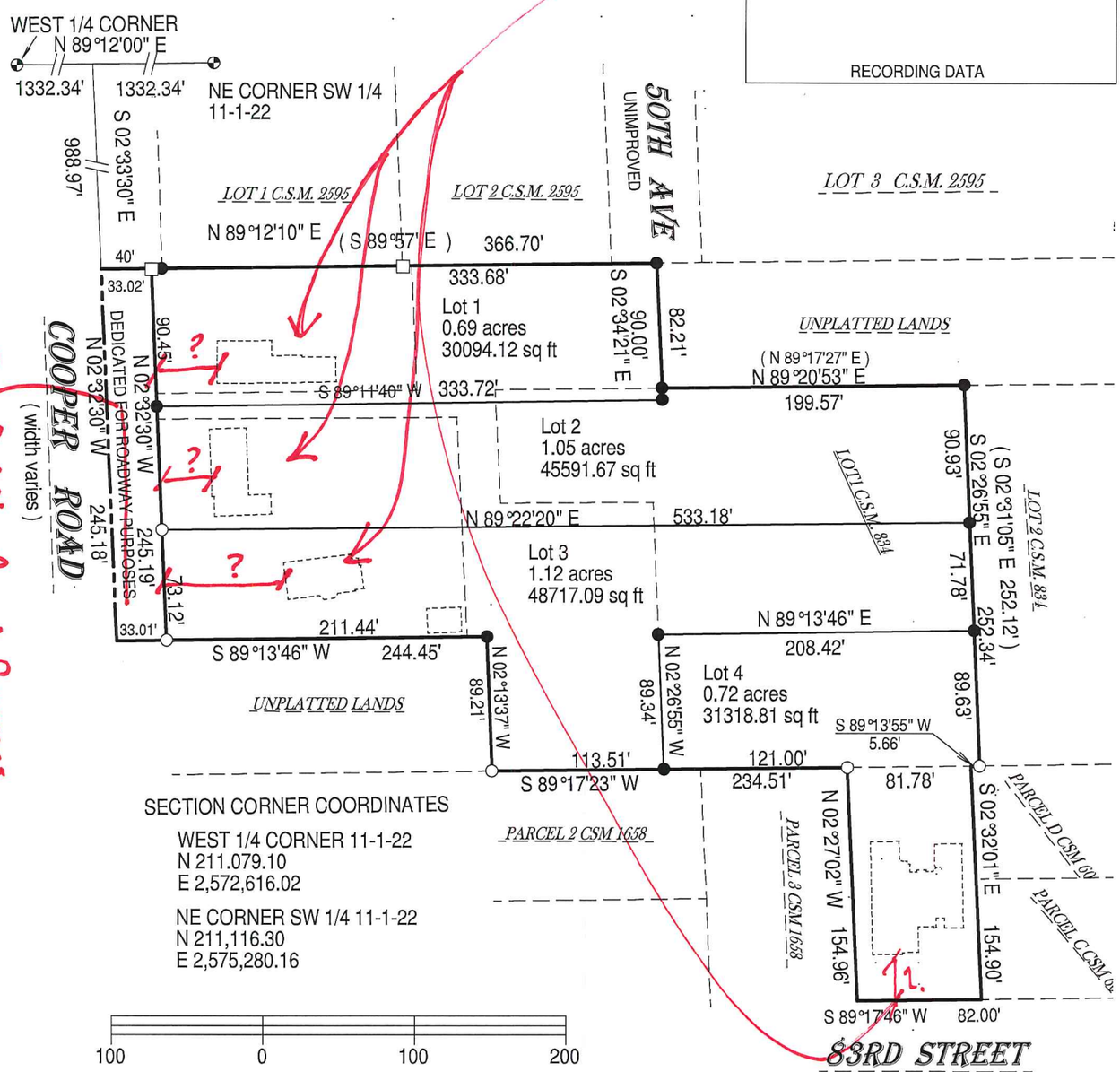

for Public Road Purposes

SECTION CORNER COORDINATES

WEST 1/4 CORNER 11-1-22
N 211,079.10
E 2,572,616.02

NE CORNER SW 1/4 11-1-22
N 211,116.30
E 2,575,280.16

BASIS OF BEARING OF THIS MAP THE WISCONSIN STATE PLANE COORDINATE SYSTEM SOUTH ZONE GRID NORTH (NAD 27) THE NORTH L;INE OF THE SW 1/4 11-1-22 WAS TAKEN TO BEAR N89°12'00" E

LEGEND

○ = found 1.25" OD iron pipe

◐ = found Kenosha county concrete monument

( ) = recorded as

● = set 1.25" OD iron pipe X 18" 1.68 LBS PER LIN FT

N
W
E
S

WISCONSIN
JEFFREY L. KIMPS
S-2436
LAKE GENEVA. WIS.
LAND SURVEYOR

JOB# 15-65

THIS INSTRUMENT DRAFTED BY J. KIMPS W.R.L.S. S-2436

sheet 1 of 3

JEFFREY L KIMPS S - 2436
Wisconsin Professional Land Surveyor

CERTIFIED SURVEY MAP NO. _____

PART OF THE NE 1/4 AND SE 1/4 OF THE SW 1/4 OF SECTION 11, TOWN 1 NORTH, RANGE 22 EAST, VILLAGE OF PLEASANT PRAIRE, COUNTY KENOSHA AND STATE OF WISCONSIN.

LEGAL DESCRIPTION:

A REDIVISION OF PART OF THE NE 1/4 AND SE 1/4 OF THE SW 1/4 OF SECTION 11, TOWN 1 NORTH, RANGE 22 EAST, AND LOT 1 OF KENOSHA COUNTY CERTIFIED SURVEY MAP No. 834, RECORDE AS DOCUMENT No. 676764 AND PARCEL 4 OF KENOSHA COUNTY CERTIFEID SURVEY MAP No. 1658, RECORDED AS DOCUMETNT No. 991376 AT THE KENOSHA COUNTY REGISTER OF DEEDS; LYING AND BEING IN THE VILLAGE OF PLEASANT PRAIRE, COUNTY KENOSHA AND STATE OF WISCONSIN MORE PARTICULARY DESCRIBED AS :

Commencing at the west 1/4 corner of said section 11; thence N89°12'00"E, a distance of 1332.34 feet; thence S02°33'30"E, a distance of 988.97 feet to the southwest corner of Kenosha County certified survey map No. 2595 and the POINT OF BEGINNING; thence N89°12'10"E, along the south line of said certified survey No. 2595 a distance of 366.70 feet; to a point at the end of and in the center of unimproverd 50th Avenue thence S02°34'21"E, a distance of 82.21 feet to the north line of lot 1 of Kenosha County certified survey map No. 834 ; thence N89°20'53"E, a distance of 199.57 feet to the northeast corner of lot 1 of said certified survey No. 834 ; thence S02°26'55"E, a distance of 252.34 feet along the east line of said lot 1 to the southeast corner of said lot 1 and the north line of parcel D of Kenosha County certified survey map No. 60 ; thence S89°13'55"W along said north line, a distance of 5.66 feet to the northeast corner of parcel 4 of Kenosha County certified survey Map No. 1658 ; thence S02°32'01"E, a distance of 154.90 feet along the east line of said parcel 4 to the north line of 83rd Street; thence S89°17'46"W, along said north line a distance of 82.00 feet to the southwest corner of said parcel 4 ; thence N02°27'02"W, along the west line of said parcel 4, a distance of 154.96 feet to the northwest corner of said parcel 4 ; thence S89°17'23"W, a distance of 234.51 feet; thence N02°13'37"W, a distance of 89.21 feet; thence S89°13'46"W, a distance of 244.45 feet, to the center line of Cooper Road ; thence N02°32'30"W along said center line, a distance of 245.18 feet to the POINT OF BEGINNING; said described tract containing 3.8 Acres, more or less. Execpting therefrom the westerly 33.00 feet which is dedicated to the public for road way purposes.

SURVEYORS CERTIFICATE:

I, JEFFREY L. KIMPS, SURVEYOR, DO HEREBY CERTIFY THAT AT THE DIRECTION OF SONES PROPERTIES LLC., HELEN SAMPSON REVOCABLE TRUST, STANLEY & DOROTHY KRIFKA, ROXANNE PATRICK AND JOHN JR. & PAMELA O,CONNELL, I HAVE SURVEYED THE LAND DESCRIBED HEREON AND THAT THE MAP SHOWN IS A CORRECT REPRESENTATION OF ITS EXTERIOR BOUNDARIES AND DIVISION THEREOF THAT I HAVE FULLY COMPLIED WITH SECTION 236.34 OF THE WISCONSIN STATUTES AND THE ~~SUBDIVISION~~ ORDINANCE FOR THE VILLAGE OF PLEASANT PRAIRE.

Land Division and Development Control

WISCONSIN
JEFFREY L. KIMPS S-2436 LAKE GENEVA, WIS.
LAND SURVEYOR

CERTIFIED SURVEY MAP NO. _____

PART OF THE NE 1/4 AND SE 1/4 OF THE SW 1/4 OF SECTION 11, TOWN 1 NORTH, RANGE 22 EAST, VILLAGE OF PLEASANT PRAIRE, COUNTY KENOSHA AND STATE OF WISCONSIN.

OWNERS CERTIFICATE:

AS OWNERS WE HEREBY CERTIFY THAT WE HAVE CAUSED THE LAND DESCRIBED ON THIS MAP TO BE SURVEYED, DIVIDED , MAPPED AND DEDICATED AS REPRESENTED ON THIS MAP. I ALSO CERTIFY THAT THIS MAP IS REQUIRED TO BE SUBMITTED FOR APPROVAL TO: (VILLAGE OF PLEASANT PRAIRIE)

STATE OF WISCONSIN)
COUNTY OF KENOSHA)

PERSONALLY CAME BEFORE ME THIS ____DAY OF_____, 2016, THE ABOVE NAMED, TO ME KNOWN
TO BE THE PERSONS WHO EXCUTED THE FOREGOING INSTRUMENT AND ACKNOWLEDGE THE SAME.

_____

_____
MY COMMISSION EXPIRES

NOTARY PUBLIC_____, WISCONSIN

_____
SONES PROPERTIES LLC AGENT

? spelling

STATE OF WISCONSIN)
COUNTY OF KENOSHA)

PERSONALLY CAME BEFORE ME THIS ____DAY OF_____, 2016, THE ABOVE NAMED, TO ME KNOWN
TO BE THE PERSONS WHO EXCUTED THE FOREGOING INSTRUMENT AND ACKNOWLEDGE THE SAME.

_____

_____
MY COMMISSION EXPIRES

NOTARY PUBLIC_____, WISCONSIN

_____
STANLEY KRIFKA

_____
DOROTHY KRIFKA

STATE OF WISCONSIN)
COUNTY OF KENOSHA)

PERSONALLY CAME BEFORE ME THIS ____DAY OF_____, 2016, THE ABOVE NAMED, TO ME KNOWN
TO BE THE PERSONS WHO EXCUTED THE FOREGOING INSTRUMENT AND ACKNOWLEDGE THE SAME.

_____

_____
MY COMMISSION EXPIRES

NOTARY PUBLIC_____, WISCONSIN

_____
HELEN SAMPSON REVOCABLE TRUST AGENT

_____
DEREK DIGGINS

CERTIFIED SURVEY MAP NO. _____

PART OF THE NE 1/4 AND SE 1/4 OF THE SW 1/4 OF SECTION 11, TOWN 1 NORTH, RANGE 22 EAST, VILLAGE OF PLEASANT PRAIRE, COUNTY KENOSHA AND STATE OF WISCONSIN.

OWNERS CERTIFICATE:

AS OWNERS WE HEREBY CERTIFY THAT WE HAVE CAUSED THE LAND DESCRIBED ON THIS MAP TO BE SURVEYED, DIVIDED , MAPPED AND DEDICATED AS REPRESENTED ON THIS MAP. I ALSO CERTIFY THAT THIS MAP IS REQUIRED TO BE SUBMITTED FOR APPROVAL TO: (VILLAGE OF PLEASANT PRAIRIE)

STATE OF WISCONSIN)
COUNTY OF KENOSHA)

PERSONALLY CAME BEFORE ME THIS ____DAY OF_____, 2016, THE ABOVE NAMED, TO ME KNOWN
TO BE THE PERSONS WHO EXCUTED THE FOREGOING INSTRUMENT AND ACKNOWLEDGE THE SAME.

_____

_____
MY COMMISSION EXPIRES

NOTARY PUBLIC_____, WISCONSIN

_____ _____
ROXANNE PATRICK ROBERT C. PATRICK SR.

STATE OF WISCONSIN)
COUNTY OF KENOSHA)

PERSONALLY CAME BEFORE ME THIS ____DAY OF_____, 2016, THE ABOVE NAMED, TO ME KNOWN
TO BE THE PERSONS WHO EXCUTED THE FOREGOING INSTRUMENT AND ACKNOWLEDGE THE SAME.

_____

_____
MY COMMISSION EXPIRES

NOTARY PUBLIC_____, WISCONSIN

_____ _____
JONH O'CONNELL JR. PAMELA O'CONNELL

VILLAGE APPROVAL

THIS CERTIFIED SURVEY MAP HAS BEEN SUBMITTED TO AND APPROVED BY THE VILLAGE OF PLEASANT PRAIRIE ON THIS _____ DAY OF _____, 2016.

_____ _____
PLAN COMMISSION CHAIRMAN VILLAGE CLERK

Village Jane M. Romanowski

Thomas W. Terwall APPROVED_____
VILLAGE PRESIDENT

John P. Steinbrink

App. Fee #225.00

VILLAGE OF
PLEASANT PRAIRIE

Filed _____ 20__
Fee Paid _____ 20__
PC Meeting Date _____ 20__
VB Meeting Date _____ 20
Approved _____ 20__
Denied _____ 20__

VILLAGE OF PLEASANT PRAIRIE
CERTIFIED SURVEY MAP APPLICATION

To: Village Plan Commission & Village Board of Trustees of the Village of Pleasant Prairie:

I, (We), the undersigned owner(s)/agent do hereby petition the Village Board to amend the Village of Pleasant Prairie Zoning Map as hereinafter requested.

It is petitioned that the following described property be subdivided with a Certified Survey Map (CSM)

The property petitioned to be UN subdivided is located at: _____

and is legally described as follows: NE 1/4 and SE 1/4 of the SW 1/4 of Section 11, Town 1 North, Range 22 East

Tax Parcel Number(s): 91-4-122-113-0644 91-4-122-113-0048

The property abuts or adjoins a State Trunk Highway	☐ Yes	☒ No
The property abuts or adjoins a County Trunk Highway	☐ Yes	☒ No
Municipal Sanitary Sewer is available to service said properties	☐ Yes	☒ No
Municipal Water is available to service said properties	☐ Yes	☒ No

I (We), have contacted the Community Development Department to arrange a pre-application meeting to discuss the proposed request with the Village staff to determine additional information that may be needed to consider the request.

I, (We), hereby certify that all the above statements and attachments submitted herewith are true and correct to the best of my knowledge.

PROPERTY OWNER: Soens Properties, LLC

Print Name: William E. Soens

Signature: [signature] Pres

Address: 16506 - 75th St

Bristol, WI 53104-9770
(City) (State) (Zip)

Phone: 262.237.0817

Fax: –

Date 13 APR 16

bristolxbill@gmail.com

OWNER'S AGENT:

Print Name: Patricia A. Soens

Signature: Patricia A. Soens

Address: 8123 - Cooper Road

Kenosha WI 53142
(City) (State) (Zip)

Phone: (262) 857-7415

Fax: _____

Date: 4/13/16

sassysoens@yahoo.com

CERTIFIED SURVEY MAP NO. _____

PART OF THE NE 1/4 AND SE 1/4 OF THE SW 1/4 OF SECTION 11, TOWN 1 NORTH, RANGE 22 EAST, VILLAGE OF PLEASANT PRAIRE, COUNTY KENOSHA AND STATE OF WISCONSIN.

RECORDING DATA

SURVEYOR

PATHFINDER SURVEYING INC.
P.O BOX 322
LAKE GENEVA, WI. 53147
WWW.PATHFINDERSURVEYING.NET
262-248-8303

OWNERS

SONES PROPERTIES LLC
DERECK DIGGINS & HELEN SAMPSON REVOCABLE TRUST
STANLEY & DOROTHY KRIFKA
ROBRT C. PATRICK SR. & ROXANNE PATRICK
JOHN JR. & PAMELA O'CONNELL

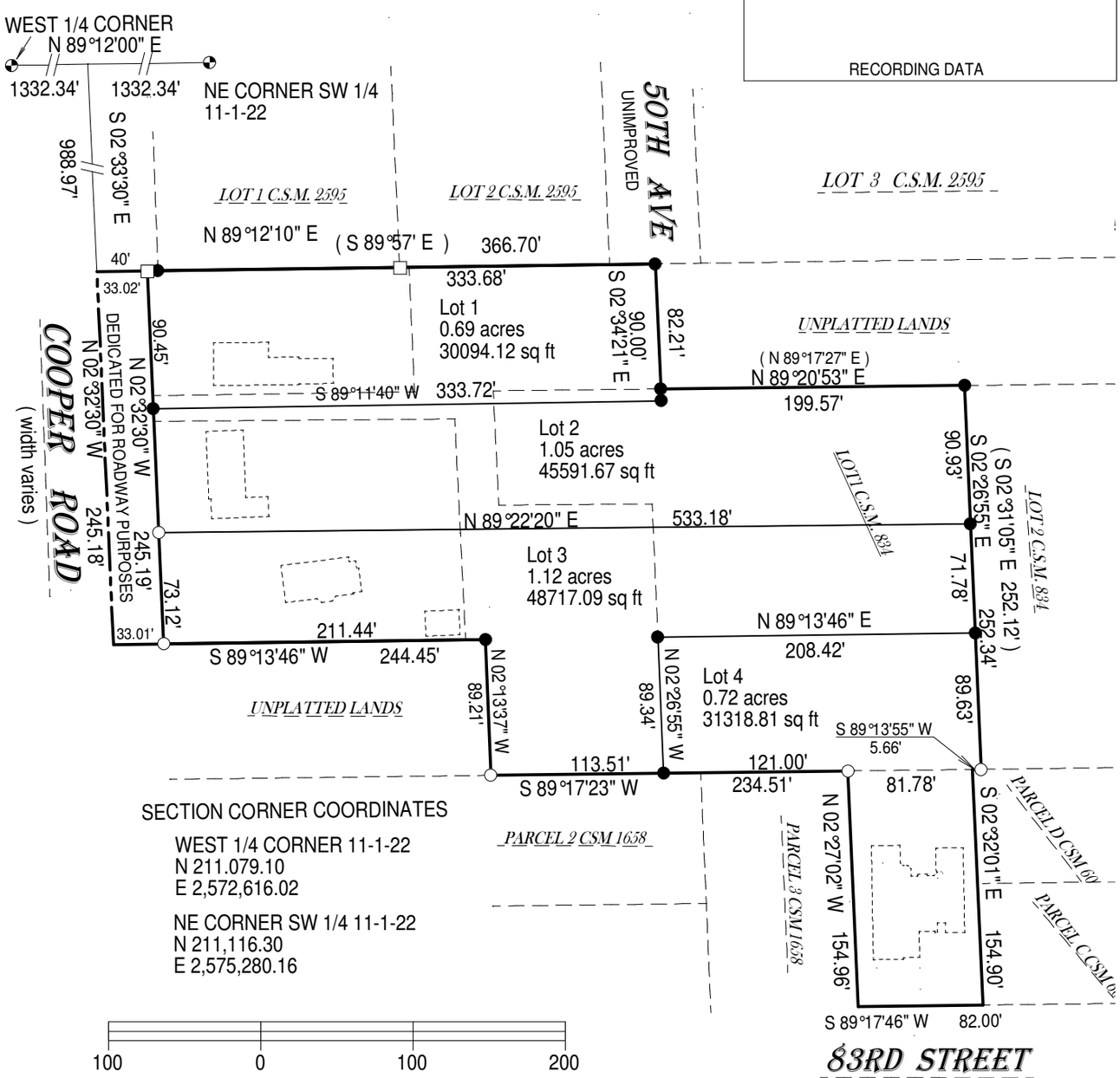

SECTION CORNER COORDINATES

WEST 1/4 CORNER 11-1-22
N 211.079.10
E 2,572,616.02

NE CORNER SW 1/4 11-1-22
N 211,116.30
E 2,575,280.16

100 0 100 200

BASIS OF BEARING OF THIS MAP THE WISCONSIN STATE PLANE COORDINATE SYSTEM SOUTH ZONE GRID NORTH (NAD 27) THE NORTH L;INE OF THE SW 1/4 11-1-22 WAS TAKEN TO BEAR N89°12'00" E

LEGEND

○ = found 1.25" OD iron pipe

⊕ = found Kenosha county concrete monument

( ) = recorded as

● = set 1.25" OD iron pipe X 18" 1.68 LBS PER LIN FT

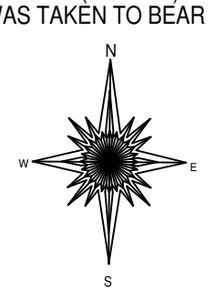

WISCONSIN
JEFFREY L. KIMPS
S-2436
LAKE GENEVA. WIS.
LAND SURVEYOR

JOB# 15-65

THIS INSTRUMENT DRAFTED BY J. KIMPS W.R.L.S. S-2436

sheet 1 of 3

JEFFREY L KIMPS S - 2436
Wisconsin Professional Land Surveyor

CERTIFIED SURVEY MAP NO. _____

PART OF THE NE 1/4 AND SE 1/4 OF THE SW 1/4 OF SECTION 11, TOWN 1 NORTH, RANGE 22 EAST, VILLAGE OF PLEASANT PRAIRE, COUNTY KENOSHA AND STATE OF WISCONSIN.

LEGAL DESCRIPTION:

A REDIVISION OF PART OF THE NE 1/4 AND SE 1/4 OF THE SW 1/4 OF SECTION 11, TOWN 1 NORTH, RANGE 22 EAST, AND LOT 1 OF KENOSHA COUNTY CERTIFIED SURVEY MAP No. 834, RECORDE AS DOCUMENT No. 676764 AND PARCEL 4 OF KENOSHA COUNTY CERTIFEID SURVEY MAP No. 1658, RECORDED AS DOCUMETNT No. 991376 AT THE KENOSHA COUNTY REGISTER OF DEEDS; LYING AND BEING IN THE VILLAGE OF PLEASANT PRAIRE, COUNTY KENOSHA AND STATE OF WISCONSIN MORE PARTICULARY DESCRIBED AS :

Commencing at the west 1/4 corner of said section 11; thence N89°12'00"E, a distance of 1332.34 feet; thence S02°33'30"E, a distance of 988.97 feet to the southwest corner of Kenosha County certified survey map No. 2595 and the POINT OF BEGINNING; thence N89°12'10"E, along the south line of said certified survey No. 2595 a distance of 366.70 feet; to a point at the end of and in the center of unimproverd 50th Avenue thence S02°34'21"E, a distance of 82.21 feet to the north line of lot 1 of Kenosha County certified survey map No. 834 ; thence N89°20'53"E, a distance of 199.57 feet to the northeast corner of lot 1 of said certified survey No. 834 ; thence S02°26'55"E, a distance of 252.34 feet along the east line of said lot 1 to the southeast corner of said lot 1 and the north line of parcel D of Kenosha County certified survey map No. 60 ; thence S89°13'55"W along said north line, a distance of 5.66 feet to the northeast corner of parcel 4 of Kenosha County certified survey Map No. 1658 ; thence S02°32'01"E, a distance of 154.90 feet along the east line of said parcel 4 to the north line of 83rd Street; thence S89°17'46"W, along said north line a distance of 82.00 feet to the southwest corner of said parcel 4 ; thence N02°27'02"W, along the west line of said parcel 4, a distance of 154.96 feet to the northwest corner of said parcel 4 ; thence S89°17'23"W, a distance of 234.51 feet; thence N02°13'37"W, a distance of 89.21 feet; thence S89°13'46"W, a distance of 244.45 feet, to the center line of Cooper Road ; thence N02°32'30"W along said center line, a distance of 245.18 feet to the POINT OF BEGINNING; said described tract containing 3.8 Acres, more or less. Execpting therefrom the westerly 33.00 feet which is dedicated to the public for road way purposes.

SURVEYORS CERTIFICATE:

I, JEFFREY L. KIMPS, SURVEYOR, DO HEREBY CERTIFY THAT AT THE DIRECTION OF SONES PROPERTIES LLC., HELEN SAMPSON REVOCABLE TRUST, STANLEY & DOROTHY KRIFKA, ROXANNE PATRICK AND JOHN JR. & PAMELA O,CONNELL, I HAVE SURVEYED THE LAND DESCRIBED HEREON AND THAT THE MAP SHOWN IS A CORRECT REPRESENTATION OF ITS EXTERIOR BOUNDARIES AND DIVISION THEREOF THAT I HAVE FULLY COMPLIED WITH SECTION 236.34 OF THE WISCONSIN STATUTES AND THE SUBDIVISION ORDINANCE FOR THE VILLAGE OF PLEASANT PRAIRE.

WISCONSIN
JEFFREY L. KIMPS
S-2436
LAKE GENEVA, WIS.
LAND SURVEYOR

CERTIFIED SURVEY MAP NO. _____

PART OF THE NE 1/4 AND SE 1/4 OF THE SW 1/4 OF SECTION 11, TOWN 1 NORTH, RANGE 22 EAST, VILLAGE OF PLEASANT PRAIRE, COUNTY KENOSHA AND STATE OF WISCONSIN.

OWNERS CERTIFICATE:

AS OWNERS WE HEREBY CERTIFY THAT WE HAVE CAUSED THE LAND DESCRIBED ON THIS MAP TO BE SURVEYED, DIVIDED , MAPPED AND DEDICATED AS REPRESENTED ON THIS MAP. I ALSO CERTIFY THAT THIS MAP IS REQUIRED TO BE SUBMITTED FOR APPROVAL TO: (VILLAGE OF PLEASANT PRAIRIE)

STATE OF WISCONSIN)
COUNTY OF KENOSHA)

PERSONALLY CAME BEFORE ME THIS ____DAY OF_____, 2016, THE ABOVE NAMED, TO ME KNOWN
TO BE THE PERSONS WHO EXCUTED THE FOREGOING INSTRUMENT AND ACKNOWLEDGE THE SAME.

_____

_____
MY COMMISSION EXPIRES

NOTARY PUBLIC_____, WISCONSIN

_____
SONES PROPERTIES LLC AGENT

STATE OF WISCONSIN)
COUNTY OF KENOSHA)

PERSONALLY CAME BEFORE ME THIS ____DAY OF_____, 2016, THE ABOVE NAMED, TO ME KNOWN
TO BE THE PERSONS WHO EXCUTED THE FOREGOING INSTRUMENT AND ACKNOWLEDGE THE SAME.

_____

_____
MY COMMISSION EXPIRES

NOTARY PUBLIC_____, WISCONSIN

_____
STANLEY KRIFKA

_____
DOROTHY KRIFKA

STATE OF WISCONSIN)
COUNTY OF KENOSHA)

PERSONALLY CAME BEFORE ME THIS ____DAY OF_____, 2016, THE ABOVE NAMED, TO ME KNOWN
TO BE THE PERSONS WHO EXCUTED THE FOREGOING INSTRUMENT AND ACKNOWLEDGE THE SAME.

_____

_____
MY COMMISSION EXPIRES

NOTARY PUBLIC_____, WISCONSIN

_____
HELEN SAMPSON REVOCABLE TRUST AGENT

_____
DEREK DIGGINS

CERTIFIED SURVEY MAP NO. _____

PART OF THE NE 1/4 AND SE 1/4 OF THE SW 1/4 OF SECTION 11, TOWN 1 NORTH, RANGE 22 EAST, VILLAGE OF PLEASANT PRAIRE, COUNTY KENOSHA AND STATE OF WISCONSIN.

OWNERS CERTIFICATE:

AS OWNERS WE HEREBY CERTIFY THAT WE HAVE CAUSED THE LAND DESCRIBED ON THIS MAP TO BE SURVEYED, DIVIDED , MAPPED AND DEDICATED AS REPRESENTED ON THIS MAP. I ALSO CERTIFY THAT THIS MAP IS REQUIRED TO BE SUBMITTED FOR APPROVAL TO: (VILLAGE OF PLEASANT PRAIRIE)

STATE OF WISCONSIN)
COUNTY OF KENOSHA)

PERSONALLY CAME BEFORE ME THIS ____DAY OF_____, 2016, THE ABOVE NAMED, TO ME KNOWN
TO BE THE PERSONS WHO EXCUTED THE FOREGOING INSTRUMENT AND ACKNOWLEDGE THE SAME.

_____

_____
MY COMMISSION EXPIRES

NOTARY PUBLIC_____, WISCONSIN

_____ _____
ROXANNE PATRICK ROBERT C. PATRICK SR.

STATE OF WISCONSIN)
COUNTY OF KENOSHA)

PERSONALLY CAME BEFORE ME THIS ____DAY OF_____, 2016, THE ABOVE NAMED, TO ME KNOWN
TO BE THE PERSONS WHO EXCUTED THE FOREGOING INSTRUMENT AND ACKNOWLEDGE THE SAME.

_____

_____
MY COMMISSION EXPIRES

NOTARY PUBLIC_____, WISCONSIN

_____ _____
JONH O'CONNELL JR. PAMELA O'CONNELL

VILLAGE APPROVAL

THIS CERTIFIED SURVEY MAP HAS BEEN SUBMITTED TO AND APPROVED BY THE VILLAGE OF PLEASANT PRAIRIE ON THIS _____ DAY OF _____, 2016.

_____ _____
PLAN COMMISSION CHAIRMAN VILLAGE CLERK

APPROVED _____
VILLAGE PRESIDENT