AGENDA
VILLAGE OF PLEASANT PRAIRIE
PLEASANT PRAIRIE VILLAGE BOARD
PLEASANT PRAIRIE WATER UTILITY
PLEASANT PRAIRIE SEWER UTILITY
Village Hall Auditorium
9915 – 39th Avenue
Pleasant Prairie, WI
September 6, 2016
5:00 p.m.

1. Call to Order

2. Pledge of Allegiance

3. Roll Call

4. Consider Entering Into Executive Session pursuant to Section 19.85(1)(g) Wis. Stats. to confer with legal counsel for the governmental body who is rendering oral or written advice concerning strategy to be adopted by the body with respect to litigation in which it is or is likely to become involved.

5. Return to Open Session at 6:00 p.m.

6. Minutes of Meetings – August 1 and August 15, 2016

7. Citizen Comments (Please be advised per State Statute Section 19.84(2), information will be received from the public and there may be limited discussion on the information received. However, no action will be taken under public comments.)

8. Administrator's Report

9. New Business

   A. Consider Ordinance #16-27 to Repeal and Recreate Chapter 287 of the Municipal Code relating to Sex Offender Residency.

   B. Receive Plan Commission recommendation and consider approval of a Certified Survey Map for the property located at the southwest corner of STH 165 (104th Street and 80th Avenue) in LakeView Corporate Park.

   C. Consider an Option and Land Lease Agreement with SBA Towers IX (SBA) for a cellular communication facility located at Pleasant Prairie Park (8436 104th Avenue).

10. Village Board Comments

11. Adjournment

The Village Hall is handicapped accessible. If you have other special needs, please contact the Village Clerk, 9915 – 39th Avenue, Pleasant Prairie, WI (262) 694-1400

VILLAGE OF PLEASANT PRAIRIE
PLEASANT PRAIRIE VILLAGE BOARD
PLEASANT PRAIRIE WATER UTILITY
PLEASANT PRAIRIE SEWER UTILITY
9915 - 39th Avenue
Pleasant Prairie, WI
August 1, 2016
6:00 p.m.

A regular meeting of the Pleasant Prairie Village Board was held on Monday, August 1, 2016. Meeting called to order at 6:00 p.m. Present were Village Board members John Steinbrink, Steve Kumorkiewicz and Mike Serpe. Kris Keckler and Dave Klimisch were excused. Also present were Michael Pollocoff, Village Administrator; Tom Shircel, Assistant Administrator; Jean Werbie-Harris, Community Development Director; Kathy Goessl, Finance Director; Dave Smetana, Police Chief; Doug McElmury; Fire & Rescue Chief; Rocco Vita, Village Assessor; Matt Fineour, Village Engineer; John Steinbrink Jr., Public Works Director; Carol Willke, Human Resources Director; Brian Smith, Recreation Director; Dan Honore', IT Director; Sandro Perez, Inspection Superintendent and Jane M. Romanowski, Village Clerk.

1. CALL TO ORDER

2. PLEDGE OF ALLEGIANCE

3. ROLL CALL

4. PUBLIC HEARING

A. Consider the request for a Class "B" Fermented Malt Beverage License for the proposed Chipotle Mexican Grill to be located at 9370 76th Street, Suite B.

Jane Romanowski:

Mr. President and Board members, Chipotle Mexican Grill of Colorado, LLC, submitted an application requesting a Class B fermented malt beverage license for the proposed Chipotle Mexican Grill #2820 to be located at the address indicated, 9370 76th Street, Suite B. The Class B license allows for the sale of beer and other fermented malt beverages for sale to consumers for on or off premise consumption.

By ordinance the Board may grant a license to a project that's currently under construction if the establishment opens within 90 days. The Board can also extend that to 180 days if necessary. Chipotle anticipates opening on or about September 20th. So we'll make that 90 days if the Board approves their license.

The police department checks have been completed. Ownership, agency, residency and training and publication requirements have been satisfied. And if the Village Board would approve the license request they would just need to pay the fees from the date of issuance through June 30th of next year - publication costs - they do have to provide us with a lease securing the licensed premise. I haven't gotten that yet. They have time. And then, of course, the certificates of occupancy need to be issued by the community development department inspection and fire and rescue departments. So with that we can open the public hearing. There were no signups tonight, Mr. President.

John Steinbrink:

This being a public hearing I am going to open it for comment or question. Anybody wishing to speak? Anybody wishing to speak? Hearing none I'm going to close the public hearing and open it up to Board comment or question.

Michael Serpe:

They owe some fees and what do they have to do?

Jane Romanowski:

Just the regular prorated fees from the date of issuance through June 30th of next year. Publication costs because we had to publish the notice in the newspaper. They have to provide a lease for the premises, and then we just have to wait for the final inspections to be done so they get occupancy. And once all that's taken care of then I would issue the license. And the agent for the license, I forgot to put that in the memo, is Brian Bushaw who was approved by the police department.

Michael Serpe:

Okay. I move approval subject to the requirements that are set forth by the Village Clerk.

Steve Kumorkiewicz:

Second.

John Steinbrink:

Motion by Mike, second by Steve. Any further discussion?

SERPE MOVED TO GRANT THE REQUEST FOR A CLASS "B" FERMENTED MALT BEVERAGE LICENSE FOR THE PROPOSED CHIPOTLE MEXICAN GRILL TO BE LOCATED AT 9370 76TH STREET, SUITE B, SUBJECT TO THE CONDITIONS SET FORTH BY THE VILLAGE CLERK; SECONDED BY KUMORKIEWICZ; MOTION CARRIED 3-0

John Steinbrink:

That brings us to citizen comments. Before we do that, Kathy, we have special guests here this evening. Kathy, could you introduce the Court to us?

Jane Romanowski:

If you want to just grab the microphone and stand over there that's fine. It just pulls right out.

Lindsey Goessl:

Hello, I'm Miss Pleasant Prairie 2015 Lindsey Goessl. I'd just like to say thank you for the opportunity to serve as Miss Pleasant Prairie 2015 and for the $500 scholarship that will be put to good use for college later on. And one of my favorite events this year was all of those different [inaudible] events because I got to see and meet all the men and women who served our country. And here is my Junior Miss Rachel.

Raechel Boes:

Hello, I am Raechel Boes. And I am Junior Miss of 2015. During my year as Junior Miss I enjoyed everything I was able to do. My favorite event was the 2015 Bristol Progress Days Parade not only because it was my first event but also because the parades were a lot of fun because of the celebratory interactions with the community. Also, one of the best was the Senior Citizens Game Night at Grand Prairie which was my event I had the privilege to organize based off of my platform, caring for senior citizens. Through this experience I have met many interesting people. I believe that it has also helped me grow in many ways and gotten me much more involved in the community.

I would like to thank everyone that has been involved in making this an extraordinary experience, the Village of Pleasant Prairie for giving me the opportunity, all of our generous sponsors for helping to make it possible. Also, the Miss Pleasant Prairie Pageant Director and Coordinators who worked so hard, especially Chelsea Goessl who helped guide us during the pageants. Plus I would like to thank my court members Lindsey, Amity and Olivia. You are awesome. Thank you.

Lindsey Goessl:

Leaving us with one lest quote. Today we close the door to the past, open the door to the future, take a deep breath, step on through and start a new chapter in our life. Thank you.

John Steinbrink:

I see we have some more sashes and tiaras.

Chloe Lenz:

Hello, I'm Junior Miss Pleasant Prairie 2016 and my name is Chloe Lenz.

Adelynn Lens:

Hello, I'm Adelynn Lens. I'm Little Miss Pleasant Prairie 2016.

Chloe Lens:

This is Ashlynn Kerley and she is Tiny Miss Pleasant Prairie 2016.

John Steinbrink:

Thank you, girls. Group photo.

5. CITIZEN COMMENTS

Jane Romanowski:

No signups tonight, Mr. President.

John Steinbrink:

Anybody wishing to speak under citizens' comments?

6. ADMINISTRATOR'S REPORT – None.

7. NEW BUSINESS

A. Consider an award of contract for the tennis court fencing projects at Village Green and Pleasant Prairie Parks.

John Steinbrink, Jr.:

Mr. President and members of the Board, this evening I bring before you a recommendation for a contract to be awarded for some fencing to put up around the two new tennis courts. One of the tennis courts shown on the screen above you is for Village Green Park located on Cooper and 98th right between Devonshire and Village Green. And the next park Pleasant Prairie Park on Bain Station and 104th. This is actually the second phase of the impact fee funded project. And so no general fund dollars are going for this project. This is all paid for by the impact fees collected from new development. So we're very excited to get these new tennis courts striped and get the fencing up.

There were actually three bids received. They're all very good companies, they're all very competitive bid, but the lowest bid was submitted by Century Fence Company in the amount of $48,427.20. I do recommend a contract be awarded to Century Fence in that amount. I can answer any questions.

Michael Serpe:

I make a motion to accept.

Steve Kumorkiewicz:

Second.

John Steinbrink:

Motion by Mike, second by Steve. Any further discussion?

SERPE MOVED TO AWARD A CONTRACT FOR THE TENNIS COURT FENCING PROJECTS AT VILLAGE GREEN AND PLEASANT PRAIRIE PARKS TO CENTURY FENCE COMPANY IN THE AMOUNT OF $48,427.20; SECONDED BY KUMORKIEWICZ; MOTION CARRIED 3-0.

B. Consider approval of a new liquor license agent for Kwik Trip 230 located at 10451 72nd Avenue.

Jane Romanowski:

Mr. President and Board members, you've seen these come through periodically. The agent who was at Kwik Trip 230 located on 72nd Avenue is being reassigned. Kwik Trip has submitted the paper work and paid the fee and has requested that Michelle Haugen be appointed as successor agent. They've met all the requirements, and the police check was completed by Chief Smetana. And I would recommend Michelle Haugen as successor agent for Kwik Trip 230. A new license would be issued, and that would be good through June 30th of next year unless they come back and ask for another agent.

Steve Kumorkiewicz:

I make a motion to approve.

Michael Serpe:

Second.

John Steinbrink:

Motion by Steve, second by Mike. Further discussion?

KUMORKIEWICZ MOVED TO APPROVE THE REQUEST OF KWIK TRIP, INC. TO APPROINT MICHELLE HAUGEN AS THE NEW LIQUOR LICENSE AGENT FOR KWIK TRIP 230 LOCATED AT 10451 72ND AVENUE; SECONDED BY SERPE; MOTION CARRIED 3-0.

8. ADJOURNMENT

SERPE MOVED TO ADJOURN THE MEETING; SECONDED BY KUMORKIEWICZ; MOTION CARRIED AND MEETING ADJOURNED AT 6:10 P.M.

VILLAGE OF PLEASANT PRAIRIE
PLEASANT PRAIRIE VILLAGE BOARD
PLEASANT PRAIRIE WATER UTILITY
PLEASANT PRAIRIE SEWER UTILITY
9915 - 39th Avenue
Pleasant Prairie, WI
August 15, 2016
6:00 p.m.

A regular meeting of the Pleasant Prairie Village Board was held on Monday, August 15, 2016. Meeting called to order at 6:00 p.m. Present were Village Board members John Steinbrink, Kris Keckler, Steve Kumorkiewicz, Dave Klimisch and Mike Serpe. Also present were Michael Pollocoff, Village Administrator; Tom Shircel, Assistant Administrator; Jean Werbie-Harris, Community Development Director; Kathy Goessl, Finance Director; Dave Smetana, Police Chief; Doug McElmury; Fire & Rescue Chief; Matt Fineour, Village Engineer; John Steinbrink Jr., Public Works Director; Carol Willke, HR and Recreation Director; Dan Honore', IT Director; Brian Smith, Recreation Director; Sandro Perez, Inspection Superintendent and Vesna Savic, Deputy Village Clerk. Twenty citizens attended the meeting.

1. CALL TO ORDER

2. PLEDGE OF ALLEGIANCE

3. ROLL CALL

4. A. Presentation of recognition to Dr. Ben Feinzimer and P.A. Ben Kessel for their dedication and valued assistance in preparing the members of the Village of Pleasant Prairie Police and Fire & Rescue Departments relating to Emergency Planning and Rescue Task Force Training.

Chief Smetana:

Thank you, Mr. President, and members of the Board. It is our distinct honor tonight to honor two individuals who have been instrumental in assisting first the Pleasant Prairie Police Department with in-service training that began back in 2015 on first aid techniques and advanced first aid techniques that typically wouldn't have been involving law enforcement. They brought us down into classrooms, they dedicated their off duty uncompensated time to help us out to instruct us on these tourniquets and circulation bleeding control measures which are a growing concern in the mass casualty events that law enforcement has dealt with across the nation.

Further on down the line Dr. Feinzimer and P.A. Ben Kessel have also assisted us in training of our mass casualty response in our rescue task force training. And that rescue task force it involves bringing the police department officers into situations and now incorporating the fire rescue medics as well. So we are one response into a building or into a warm zone that we can treat individuals right at that site. Sadly we know based on past experience across the country that the faster that aid can reach those victims the better their chances of living remains.

So Dr. Feinzimer and P.A. Kessel have assisted us in a mass casualty event in our response to an active shooter event at the Pleasant Prairie Elementary School in June. So we went through that, we practiced the necessary items to ensure that we're ready and able to respond to those

situations. And I think myself joined by Chief Doug McElmury from the Fire Department just want to thank, go out and thank Dr. Feinzimer and P.A. Ben Kessel. Ben Kessel couldn't be here tonight, he's working up in Milwaukee, and we're joined here today by Dr. Feinzimer. So in appreciation for your dedication.

In the back of the room is kind of attachment to this. The training we did and the equipment we bought to assist us with this wouldn't have been possible without your support. So on the back table we've got a couple of items that we've been purchasing over the years to prepare us for these mass shooting-type situations or critical situations, mass casualty type situations. So if you want to after the meeting's done you want to take a look at that and see where the Village money is being spent on those items and the this critical training that prepares us for these events. Thank you very much.

John Steinbrink:

All right, thank you, Chiefs. And on behalf of the Village I want to thank all of you for your service and what you do. Not just when the situation arises but your everyday service and what you do. What you do is valuable to all of us in protecting us in making us all feel safe and protected here. Thank you.

Michael Serpe:

John, could I ask a favor? Emily, would you do me a favor and take a picture of the group back there. That's kind of an impressive site with the firefighters and the police officers all standing together. I like that especially today with what's happening. And as much support as we can give these people they deserve it.

Mike Pollocoff:

Get that baby in there, too. There you go.

John Steinbrink:

Once again, thank you, gentlemen.

B. Commendations for Fire and Rescue Department Personnel.

Dr. Ben Feinzimer:

As these accommodations become a bit more frequent, I'm both appreciative and a little reluctant. The paramedics/EMS personnel and law enforcement of Pleasant Prairie are amongst the strongest in our region. Their successes should always be recognized and praised. My reluctance is only as a result of the increase in frequency risking a little depreciation of their value. The guys are probably commenting, oh God, Feinzimer is going to give us a plaque again tonight. It's a nice problem to have, though. An EMS system with quarterly recognitions for patients saved from cardiac arrest. It's also a nice feeling to have driving through the Village knowing that if I

was one of these patients that the EMS personnel and police department would be there to take care of me, and I have the greatest chance of recovery as a result of their care.

So with those thoughts in mind along with Chiefs McElmury, Roepke and Longrie, and on behalf of the United Hospital System EMS team, I'm proud to recognize the following members of the Pleasant Prairie Fire Department for their roles in saving the life of a 67 year old male on April 27, 2016. Lieutenant Kevin Mattison. Firemedic Adam Craig. Firemedic Alan Cloherty. Firemedic Dean Holloway. Firemedic Michael Passafaro. Thank you everyone. Thank you.

John Steinbrink:

Once again thank you, gentlemen, for what you do.

5. MINUTES OF MEETING - JULY 18, 2016

Steve Kumorkiewicz:

Move to approve.

Dave Klimisch:

Second.

John Steinbrink:

Motion by Steve, second by Dave. Any additions or corrections?

KUMORKIEWICZ MOVED TO APPROVE THE MINUTES OF THE JULY 18, VILLAGE BOARD MEETING AS PRESENTED IN THEIR WRITTEN FORM; SECONDED BY KLIMISCH; MOTION CARRIED 5-0.

6. PUBLIC HEARING

A. Consider the construction of the 47th Avenue Drainage Improvements in the vicinity of 116th Street and Final Resolution #16-31 approving said project.

Matt Fineour:

Mr. President and members of the Board, if you recall back in May we had a couple residents come into the Village Board requesting some help regarding solving a longstanding drainage issue along 47th Avenue. The drainage issue is shown kind of on that figure as the blue crosshatched area. That's the area just south of the three lots there just south of 116th Street that is ponding water.

The engineering department reviewed the situation and area drainage and completed a design to resolve this blocked drainage. A preliminary assessment resolution was passed by the Board on July 18th directing the Village Engineer to prepare the engineering report, plans and schedule of proposed assessments. Tonight in your Board packet you will find the engineer's report including Schedule A which is a copy of the plans, schedule B which is a cost of improvements,

assessment method and rate calculation, and Schedule C which is a schedule of proposed assessments.

The engineering report was mailed to the property owners listed within the assessment schedule. The project consists of a storm sewer running approximately 353 feet south of 116th Street and extending north approximately 300 feet, and it discharges to an existing drainage way just below the pond shown on the map there. We are also as part of this project regarding the drainage way which the storm sewer discharges into.

For a little bit of drainage background, the three lot CSM there was developed in the early 1990s, and if you go to the next slide, prior to the three lots being developed the natural drainage way for the area went straight north through where those lots are developed at this time. The drainage pathway shown as the blue arrows on this map, and you can see the three lots that are kind of dashed in as the future lots that exist today, the drainage from the area south went through those three lots. After the 1990s when this area was developed that drainage way was blocked, and that's why you see ponding water just south of those three lots. Drainage right now will pond in the area shown crosshatched in blue, and eventually will then go into the 116th Street ditch and go north back to essentially the existing drainage pattern that existed before.

The assessment consists of storm sewer assessment levied on those properties that have filled or blocked the historical drainage path causing localized flooding, those properties on which the localized flooding occurs and those properties that upon future development will utilize the storm sewer improvements. The storm sewer assessment is based on a cost per assessable area method. Storm sewer assessment rate is calculated by the assessable project cost divided by the total assessable acreage. The drainage area reduction factor is used to account for the exempted lands for the assessment rate.

The assessable project cost is the total cost of the project minus any exempted costs. For this project we have a couple of exempted costs. One is the removal of the existing ditch culvert storm sewer and associated catch basins that are out there today. And also clearing and grubbing and regarding of the existing downstream drainage way.

The assessable acreage is the total watershed area minus exempted lands. In this project there are some exempted lands which include existing lands within the project watershed boundary that were not associated with the alterations of the historical drainage way, two were developed prior to such alterations, and three in which the storm sewer does not add any additional benefit to the lands when considering their existing and future land use if the natural drainage way had not been altered.

On the map up there the exempted lands are crosshatched in black. They include the lands on the east side of 47th Avenue and lands south, the portion just south of the Ayres property that are currently developed, previously developed. The assessments for this project include both active and deferred assessments. The active assessments were placed on the lands with the assessable watershed that are developed. And the deferred assessments were for lands within the assessable watershed that are vacant and are subject to future development utilizing the proposed storm sewer improvements.

This storm sewer was designed with the expectation that it would resolve the current flooding issues as well as be useful for those vacant lands within that drainage basin for future development. There were some special considerations in this assessment. One is for what is shown as parcel 1 on the map. Lands north of the drainage divide is depicted in the final assessment map which kind of goes across the middle of the property, that dashed line through there, were considered utilized and proposed storm sewer system when developed even though this area currently does not drain to the proposed storm sewer system currently. Upon developing the land the deferred assessment may be adjusted if this area under ultimate development conditions does not utilize the storm sewer.

The images were also awarded to those properties in the amount equal to the stormwater special assessment that was previously levied on properties associated with installation of the ditch culvert that was removed as part of this -- that will be removed as part of this project. Those include the three parcels, the three single family parcels just south of 116th Street.

The total project cost for this project is $92,450. That takes into consideration all costs. The total assessable project cost which is the total cost minus those exempted costs if $84,950. The total watershed area was 28.8 acres. And the total assessable acreage was 19.87 acres which is 69 percent of the total. The cost per assessable area was that of the total assessable project cost times the percent reduction rate divided by the assessable project area which came out to be $2,949.94 per acre.

The deferred assessments on this project are deferred until such time that the specialist -- sorry. The deferred assessments are deferred until those properties are developed or split within that drainage basin boundary. The active assessments are due now, or they can be paid over the Village's schedule of ten years at nine percent annual interest rate. With that I'd open it back up to the public hearing and any questions that you or the audience may have I can answer.

John Steinbrink:

Thank you, Matt. And this being a public hearing I'm going to open it up to the public comment or question. Did we have any signups for the hearing?

Vesna Savic:

The first one is Jeff Yuhas.

Jeff Yuhas:

Hi everyone. Jeff Yuhas, 11626 47th Avenue. I'm in support of this project. It's been long overdue, about 20 years it's been there, over 20 years. I'd like to thank Matt Fineour for doing a wonderful job presenting this to us and guiding us along through this project. I know it wasn't easy. And I hope the Village Board approves this project. Thank you.

Greg West:

My name's Greg West, 11616 47th Avenue. I agree with Jeff, appreciate the Board taking this up and the Village taking up this project. Again, it's been a long time. I do have a couple questions,

though. One is about this system being utilized for future land development. Is that development anticipating the land north of 116th, or is it the property south of Monica and Jeff Yuhas's property?

Matt Fineour:

The anticipated future development that would drain to that system is essentially the vacant land that's going to be west of your guys' property, really Jay Sorensen's property and also any remaining portions of the Ayres' property that's south and back of you. So all that vacant land would currently -- or under developed conditions would probably drain to that storm sewer system. They would have a detention pond somewhere in that area that would detain the water and discharge to that storm sewer.

Greg West:

Okay. So if the Ayres sell the lot to the south of the Yuhas's what is the elevation of that property and how would that affect the storm sewer just south of the Yuhas property?

Matt Fineour:

Whatever development the Ayres decide to do on their property they've got to go through a process. One is there is a neighborhood plan for that area, and if they're doing something different than the neighborhood plan they'll have to amend that through the process with the community development department. Through the whole process then they'll have to have a plan in place of how they're going to develop the property. So if it's one lot through there they still have to have a drainage and grading plan of how they're addressing the existing storm coming off the lot and as well as how that development is going to work as a whole in that area.

Greg West:

Okay. I guess my question gets back to what elevation would a house, any houses built south of there would it go a foot above the grade of the road or would it be lower or how would that --

Matt Fineour:

If you took a theoretical just south of the Yuhas's it would be at the elevation approximately at the existing houses, it would be above road grade. So that area would have to be filled up to road grade.

Greg West:

And then how would that affect the sewer that's right there?

Matt Fineour:

At that point in time that sewer that drains that low spot they would have to extend it probably further south to wherever the new low spot is going to be.

Greg West:

Okay, that was my question. I appreciate the work you did on the project, too, Matt.

Vesna Savic:

There are no other signed up speakers.

John Steinbrink:

Anyone else wishing to speak? Anyone else wishing to speak? If not, I'm going to close the public hearing and open it up to Board comment or question. Mike?

Michael Serpe:

No comment. The only comment I have is, Matt, great job so far. And I agree with Jeff and Greg a little bit long overdue. But it's here now, and it will be taken care of this fall?

Matt Fineour:

The expectation is this would be constructed by our public works department in October or thereabouts.

Michael Serpe:

And Jeff will give us a sump pump count next spring. Hopefully less than 20,000 a day or whatever it was. Move approval of 16-31.

Steve Kumorkiewicz:

Second.

John Steinbrink:

Motion by Mike, second by Steve for adoption of 16-31. Further discussion?

Dave Klimisch:

Quick question, Matt. The $50,400 that's deferred indefinitely how is that funded?

Matt Fineour:

It's funded through the stormwater utility, and then it would be reimbursed to the stormwater utility once development occurs and it gets paid.

Dave Klimisch:

And that's a flat rate so if development's in 50 years it doesn't increase at a certain percent, it will be $50,414?

Matt Fineour:

That's right, yup.

John Steinbrink:

Further comment or question?

SERPE MOVED TO ADOPT RESOLUTION #16-31 FOR THE CONSTRUCTION OF 47TH AVENUE DRAINAGE IMPROVEMENTS IN THE VICINITY OF 116TH STREET; SECONDED BY KUMORKIEWICZ; MOTION CARRIED 5-0.

7. CITIZEN COMMENTS

John Steinbrink:

Anyone wishing to speak under citizens' comments? Hearing none I'm going to close citizens' comments.

8. ADMINISTRATOR'S REPORT – None

9. NEW BUSINESS

A. Consider Park Commission recommendation and adopt Resolution #16-30 in Appreciation and Recognition (Posthumous) to Richard Oscarson.

John Steinbrink, Jr.:

Mr. President and members of the Board, on August 2, 2016 the Village Park Commission met to consider and approve a recommendation to the Board for creation of private construction for the proposed Richard Oscarson Memorial Prairie in Prairie Springs Park by Kenosha Grounds Care. The Park Commission received and considered the following information.

Rich Oscarson, owner and operator of Pleasant Prairie based landscaping company, Kenosha Grounds Care, Inc., passed away unexpectedly on April 12, 2016 at the age of 56, doing what he loved, caring for the environment. Rich along with his wife, Jill, owned and operated Kenosha Grounds Care, Inc. for 26 years. He was a devoted husband, father and grandfather and a highly respected businessman in the area. Rich was known as the go-to person for anyone in the landscaping business in this area and within the region.

His passion for the environment and his high standards of design exceeded common initiatives by the industry helping make Pleasant Prairie a model for exceptional business and municipal landscapes. Kenosha Grounds Care has donated countless hours of time assisting Village staff and has worked on a great number of projects in and for the Village over a span of many years. Kenosha Grounds Care assisted Village crews in FEMA storm and snow cleanup events. They have landscaped numerous recent Village projects such as the rebuild of Fire Station #1, Village Hall renovation and Village roundabouts.

His testament can be seen throughout the Village in the landscaping of residential, commercial and public lands. Kenosha Grounds Care landscaped the RecPlex and Prairie Springs Park and has coordinated the planting of trees for all the memorial programs within the park. It is only fitting that this park becomes the location for a tribute and memorial for Richard Oscarson.
Attached is a map and plan elements for a proposed memorial prairie along the shore of Lake Andrea in Prairie Springs Park. The plan includes a footpath from the Lake Andrea walking path to a proposed reclaimed natural prairie preserve with oak trees, emergent shrubs and a butterfly garden. An etched piece of two by three foot wide granite affixed to a large natural blue stone will serve as the memorial. Three benches will be placed near the stone for people to sit and enjoy the new reclaimed prairie.

A proposed installation is scheduled to be complete by mid-September of this year if passed this evening, and a dedication planned for September 16th. The memorial prairie will be completely funded and installed by Kenosha Grounds Care, LLC, under the supervision of Village staff. Kenosha Grounds Care, LLC, will also maintain the memorial and will begin training Village staff to one day take over maintenance responsibilities of the prairie. The Park Commission recommends and Village staff concurs that the Village Board approve this memorial prairie and pass a resolution for the creation of the Richard Oscarson Memorial Prairie. I can answer any questions at this time.

John Steinbrink:

Any questions? Thank you, John.

Kris Keckler:

Move approval of Resolution 16-30.

Steve Kumorkiewicz:

Second.

John Steinbrink:

Motion by Kris, second by Steve. Any questions, comments? I just want to add that there's probably no one more deserving than Rich for this recognition. It's just a shame Rich wasn't here to see it. He'd be the first to say I don't deserve it, and I don't think there's anybody -- well, I can look at Joe Andrea what we did when Joe was alive and how he was able to enjoy what we did. But unlike Joe, Rich was one of those quiet guys. But what he did made such a difference in this community, and the footprint he left is going to be enjoyed by generations. So this is only fitting. And, as I say, I only wish Rich was here to see it.

Mike Pollocoff:

Mr. President, one of the comments that was made by one of the Park Commissioners, a landscaper, that's her profession, I think was really telling. She indicated that the landscaping community looked up to Rich as setting the bar, and that's the level you tried to achieve as far as the work you completed. Rich was always available to give them help even though they're competitors on telling them how to get things done, the way to make something right, what plant species were doing well, what were doing bad, what would be some methods they want to consider just to make sure that whatever happens here was right.

You don't have to look too far to see Rich's impact on this community. All you have to do is drive through LakeView Corporate Park and look at the level of landscaping that exists in that park. Look at the landscaping again at Prairie Springs Park and what we've just recently completed here. Rich has touched a lot of things in the areas that he specifically did. But as the Park Commissioner noted he's also had a positive impact on other landscapers and made them work up to a standard that they had to compete with, and they were happy to do it.

John Steinbrink:

Thank you, Mike. With that we have a motion and a second. If there's no further discussion those in favor?

KECKLER MOVED TO CONCUR WITH THE PARK COMMISSION RECOMMENDATION AND ADOPT RESOLUTION #16-30 IN APPRECIATION AND RECOGNITION (POSTHUMOUS) TO RICHARD OSCARSON; SECONDED BY KUMORKIEWICZ; MOTION CARRIED 5-0.

B. Consider Resolution #16-32 to obtain a cost share grant for the purpose of funding Emerald Ash Borer mitigation projects.

John Steinbrink, Jr.:

Mr. President and members of the Board, the Wisconsin Regional Planning Commission and the Wisconsin DNR are offering emerald ash borer mitigation grants of up to $20,000 to municipalities. Funded projects will focus on planting non-host trees to mitigate the impacts of the emerald ash borer and prepare communities for invasion by diversifying their urban and community forests. On behalf of the Village, staff will be submitting an application for this grant.

Staff plans to submit a request for a proposal and contract with a local landscaping company to plant various species of trees according to Village specifications and replace up to 100 ash trees infected with the emerald ash borer that are not responding to treatment. Diversifying species of trees will reduce the financial burden of treating the ash trees for emerald ash borer as well as strengthening the overall stability of the tree population. This diversity will also add aesthetic quality to the community.

Staff will be applying for a $20,000 grant, and stipulations of the grant require a 25 percent match. We will be allocating $10,000 in a decision packet out of the 2017 Parks budget for these matching funds. The Village is currently in year two of a three year contract with Trugreen for the treatment of emerald ash borer. The cost to treat all of the ash trees, we have about 1,100 of them within the Village, within the Village right of way over a three year period is just under $45,000. So we spend on average $15,000 a year to treat the emerald ash borer.

So this grant if awarded we would take some of the trees that have not been responding well to the treatments, and they will be candidates for the program. Grant applicants will be notified by October 1st of this year. And should the Village be awarded this grant we anticipate planting the new trees in April or May of 2017.

Michael Serpe:

I'm in favor of this grant. What I'm going to say is I don't see a real benefit of continuing the treatment of the ash trees. We're not winning, we're not going to win the war. As the trees get bigger they're going to be more expensive to treat, and there's no light at the end of the tunnel as far as a cure. I would rather see us, it's a budget thing of course, but some of this money that we're spending on the treatment of these ash trees into the replacement like this grant is going to allow us to do.

If there was a chance that we were going to be able to save these trees I'd say, yeah, keep it going. But eventually they're going to succumb, and we're going to spend a lot of money trying to save them. And I would just as soon let nature take its course and replace them with something that's going to be a little more hardy. That's just my suggestion. I'm not going to speak for the Board.

Steve Kumorkiewicz:

I agree with you.

Kris Keckler:

Yeah, my question was related to it's year two of the treatment plan. Do we have any idea if any are responding to that?

John Steinbrink, Jr.:

The treatment of the emerald ash borer is relatively new since the emerald ash borer was just found in Kenosha County which was just a newly quarantined county a couple years ago. And so I can take a little bit of time and do some research to find out the success rate of the treatment within the trees not only in Kenosha County but in other counties within the State. And then based on that I could put together a decision packet and work with Kathy and Mike in the budget process to allocate those funds to tree replacement if that seems to be the most responsible way to go.

Kris Keckler:

With 1,100 as you stated, and if truly we just get to a point that whether it's three, four, five years down the road that we end up losing all of them, the mixture, and these are all very nice looking trees that you have up on the screen, or the ones that were on there, what's the cost of these in comparison. Are these pretty expensive, or do we get --

John Steinbrink, Jr.:

Planting a new tree is around $400 for a two inch caliper at the base of the trunk.

Kris Keckler:

And are some of these over a wide range of costs as far as the types?

John Steinbrink, Jr.:

The cost are pretty consistent. It's really just kind of based on the size of the tree. And so $400 is what we normally use for budgeting purposes for planting. There's still an additional cost for removing the tree and grinding the stump, but those costs are not valid costs for this grant.

Kris Keckler:

Thank you.

Mike Pollocoff:

Rather than deciding tonight, as John indicated we can look at this as a decision package. Really for $15,000 a year we take care of 1,100. Really the delta is how many of those trees probably we shouldn't bother with or aren't going to make it, and how much time to we buy by spending $15,000 a year on treating trees? And what's that point where it's not worth it anymore and we start setting up a fund to replace them? And do we do the roadways first, do we do the parks first? Remember there's a lot of residents, and you might remember there's a lot of residents that buy into this program that are doing it at a pretty low rate per tree. Residents are relying on this program to be a place for them to take care of their trees on their property as well. So I think those are all good information items to bring to the Board as a decision packet as part of the budget.

Dave Klimisch:

It looks like it works out to about $15 a tree per year. If it's $400 to plant a new tree, depending what the survival rate is we've got a lot of years to work with. So it comes down to a financial decision.

John Steinbrink, Jr.:

Yeah, the really large trees are very expensive. They could be upwards of probably $800 or $900 once you get like over a 24 inch caliper tree. The smaller ones are a little bit cheaper to treat because you can do that with just a soil injection. You actually don't have to inject right into the trunk. So there's a wide variation. The staff will go ahead based on your conversation this evening and put together something to review during the budget cycle.

Michael Serpe:

I would move approval of 16-32.

Kris Keckler:

Second.

John Steinbrink:

Motion by Mike, second by Kris. Further discussion? Sometimes if you can buy a little time a natural predator will show up and kind of put an end to these things naturally.

Michael Serpe:

It's called a chainsaw.

John Steinbrink:

That's from a guy with a wood burning furnace. We have a motion and a second. Any further discussion?

SERPE MOVED TO ADOPT RESOLUTION #16-32 TO OBTAIN A COST SHARE GRANT FOR THE FUNDING OF EMERALD ASH BORER MITIGATION PROJECTS; SECONDED BY KECKLER; MOTION CARRIED 5-0.

C. Consider Resolution #16-33 approving and adopting the Automatic Fire/Rescue Mutual Aid Intergovernmental Agreement.

Chief McElmury:

[Inaudible] Winthrop Harbor, Zion and Newport who we had worked with quite a bit in the past. And we actually joined a group called the Quad 1 North based upon the quadrants of radio frequencies in Lake County. And it's been a very successful relationship. They come up and help us out automatically, and we go down there to help them. So it was at the advice of some of these other agreements we've had before you, the MABAS agreement and so when we've talked with the attorneys down there that we should actually have a specific intergovernmental agreement.

The way that the agreement is written also allows us to have some sub responses in addition to the one we've been doing. And the really important one to us is the agreement with the Newport

Fire Protection District because they built a fire house right at the corner of the West Frontage Road just south of the State Line. So they're the closest station to some of our area. And we actually have got a small little corner down there that is more than five miles from either fire house, and as a result could potentially have a much higher ISO rating, the highest, 10. We have an ISO rating at 2. lower is better in this case.

We've found through experience and actually some of the Somers B area that we cover as long as we have a written response agreement those people then still get the, if you will, the home department's ISO rate. So in this case even though Newport would be the first one in in areas along 122nd Street that are more than five miles from the station, they'll still get our ISO rating to figure out their insurance. So this agreement has several good layers to it, and I would recommend approval.

Steve Kumorkiewicz:

Move to adopt Resolution 16-33.

Dave Klimisch:

Second.

John Steinbrink:

Motion by Steve, second by Dave. Further discussion?

Dave Klimisch:

Are there any other areas of the Village where this could be looked at for the other corners as well?

Chief McElmury:

This is right now the only one that from an ISO standpoint is more than five miles from the station. And we wouldn't rule out other agreements. We do have an automatic response agreement along the interstate we've had in place actually for over seven years now. It's been very successful that we do with a combination of Kenosha, Bristol and Newport. Depending on where it is we help them, they help us. And it's been very successful in getting the proper amount of apparatus and people up to quickly mitigate any incidents with rigs blocking to protect our people. So it's been very successful there. We're actually meeting tomorrow morning over some other potential I guess you could say expansions and for other types of calls for this.

John Steinbrink:

Motion and a second. No further discussion?

KUMORKIEWICZ MOVED TO ADOPT RESOLUTION #16-33 TO APPROVE AND ADOPT THE AUTOMATIC FIRE/RESCUE MUTUAL AID INTERGOVERNMENTAL AGREEMENTS; SECONDED BY KLIMISCH; MOTION CARRIED 5-0.

John Steinbrink:

Thank you, Chief.

Chief McElmury:

Thank you.

D. Consider an Agreement for Professional Engineering Construction Management Services related to the 88th Avenue Water Main Extension project.

John Steinbrink, Jr.:

Mr. President and members of the Board, proposals for the Professional Engineering Construction Management for the 88th Avenue water main extension were received until July 29th, and we only received one response to that from R.A. National and Associates for the amount of $30,319. We sent it out to a couple of engineering firms, and everyone is really busy right now with the amount of construction that's going on.

We did have an engineer's estimate and very close to that $30,000, so we're very happy with the amount that came in from R.A. Smith. R.A. Smith has done a lot of other work for the Village. Most recently the Springbrook Road project. They're assisting Village crews on the Sheridan Road project also. So they do have some very competent staff that are very well versed in our specs and everything that we want to have as far as construction management. And I would recommend award of this contract to R.A. Smith for the 88th Avenue water main extension construction management for the amount not to exceed $30,319.

Michael Serpe:

So moved.

Kris Keckler:

Second.

John Steinbrink:

Motion by Mike, second by Kris. Further discussion?

SERPE MOVED TO APPROVE AN AGREEMENT FOR PROFESSIONAL ENGINEERING CONSTRUCTION MANAGEMENT SERVICES FOR THE 88TH AVENUE WATER MAIN EXTENSION PROJECT; SECONDED BY KECKLER; MOTION CARRIED 5-0.

E. Consider a Professional Service Agreement to conduct a traffic signal warrant analysis located at the intersection of STH 165 and 80th Avenue.

Matt Fineour:

Mr. President and members of the Board, this is a professional service agreement for a traffic signal warrant analysis for the intersection of 165 and 80th Avenue. This intersection was included in the overall traffic impact analysis for the LakeView Corporate Park that was done in 2014. At that time the traffic counts that were used for the 2014 study were actually 2012 traffic counts. With the development that has occurred over the past four years, and there are some developments asking whether a signal will go in there at some point in time. We're requesting another traffic signal warrant analysis with actually 2016 traffic counts and updated development within the area.

The service agreement with TADI is to do a traffic warrant report and analysis. There's two tasks totaling $4,123. If task 1 shows that a traffic signal is not warranted at this time, then the warrant report which is task number 2 won't be done. If it shows that a signal is warranted then both tasks will be completed. It's recommended that the Village Board award this contract for task 1 and 2 in the amount of $6,761.

Michael Serpe:

Does the State pay anything?

Matt Fineour:

For the warrant analysis right now they would not. This would be an update to our study.

Michael Serpe:

Installation is paid for by who?

Matt Fineour:

If a signal is warranted my guess would be the cost would be borne by the Village.

Mike Pollocoff:

They could pay for it but -- well, they'll pay for it, but they'll say we'll pay for it when we have money and they'll never have money. There are some warranted signals out there that they've been waiting years and years and years. This isn't Tax Increment District #2. I mean it's one of the things that we -- otherwise it would be a severe burden on the tax roll.

Michael Serpe:

This is an area sometimes I think that the half a percent sales tax that the County charges could be divvied up with the municipalities a little bit and cover a cost such as this. There's enough money to be divvied up, but. I'd move approval of the award of contract to TADI.

Dave Klimisch:

Second.

John Steinbrink:

Motion by Mike, second by Dave. Further discussion?

Dave Klimisch:

What's the price range of the signal if it gets installed?

Matt Fineour:

Signals generally are around, I can give you a ballpark number, around $300,000.

John Steinbrink:

Mike, you have to realize that if we had the State pay for it we'd have to cosign the loan. It doesn't always work out. We have a motion and a second. Any further discussion?

SERPE MOVED TO APPROVE A PROFESSIONAL SERVICE AGREEMENT TO CONDUCT A TRAFFIC SIGNAL WARRANT ANALYSIS AT THE INTERSECTION OF STH 165 AND 80th AVENUE; SECONDED BY; MOTION CARRIED 5-0.

F. Consider a Professional Service Agreement for a traffic signal design located at STH 165 and the I-94 Southbound Off-ramp.

Matt Fineour:

Mr. President and members of the Board, unlike the one I just presented this one intersection is warranted for a traffic signal. There was a TIA that was done in 2010 as part of the overall development around the I-94 State Highway 165 and West Frontage Road area that identified a signal to be placed there at such time that a signal was warranted. We've been notified by the DOT that a signal is warranted at this intersection at this time. The agreement with the DOT was that the Village would design and install the traffic signal.

This is a service agreement with R.A. Smith to prepare the traffic signal design and bidding documents for the project. The design service agreement is a time and material contract with an estimate not to exceed $32,400. It's recommended that the Village award the design and service contract with R.A. Smith for $32,400. It's expected that this design would be completed this fall and bid out towards the end of this year for spring construction. The cost of this project then would be included in the TID District.

Mike Pollocoff:

I might add that the other thing is the difference in this project from the other one is at the time we were making the improvements to Highway 165 and Q, in order to get a permit from the State to be able to do that work they required that we agree ahead of time to pay for all the signal improvements. So we agreed to this one. In order to get the Uline development underway the State held this as the object we had to pay for. So we went into it knowingly. So, again, as Matt indicated this is a projected funded by Tax Increment District #2.

Michael Serpe:

What kind of signalization is this going to be here?

Mike Pollocoff:

Nice, very nice.

Michael Serpe:

It's going to be regular traffic signals for three ways then, right?

Matt Fineour:

Yes, three ways.

Michael Serpe:

That's a lot of traffic signals in a small area, condensed area there.

Dave Klimisch:

And that will be in the range of $300,000?

Matt Fineour:

That would be ballpark, yeah, range.

Michael Serpe:

Send the State a Christmas card when you get done. Move approval.

Steve Kumorkiewicz:

Second.

John Steinbrink:

Motion by Mike, second by Steve. Further discussion?

SERPE MOVED TO APPROVE A PROFESSIONAL SERVICE AGREEMENT FO A TRAFFIC SIGNAL DESIGN LOCATED AT STH 165 AND THE I-94 SOUTHBOUND OFF-RAMP; SECONDED BY KUMORKIEWICZ; MOTION CARRIED 5-0.

G. Consider disallowing a claim filed by Peter Rush relating to a damaged vehicle.

Mike Pollocoff:

Mr. President, we received a claim from Mr. Peter Rush from Hinsdale, Illinois. He was at an event at RecPlex in Prairie Springs Park. And we have sandwich board signs that we put on for event parking and directing people where they go. And at some point one of those signs fell over, and Mr. Rush drove over it and damaged his tire. So he indicated that that was the Village's responsibility to reimburse him for driving over the sandwich board sign. So as we do as required we forwarded that to our insurance company for them to evaluate. They determined, and I concur with this, that we weren't negligent. As soon as we see those things go down somebody gets them up. But if someone decides to drive over them they're going to incur some damage with it. So they're recommending and I as well recommend that we deny this claim and forward the results to Mr. Rush to start the time period where he could file action against the insurance company if he needs to.

Kris Keckler:

Move approval to deny the claim.

Steve Kumorkiewicz:

Second.

John Steinbrink:

Motion by Kris, second by Steve. Further discussion?

KECKLER MOVED TO DISALLOW THE CLAIM FILED BY PETER RUSH; SECONDED BY KUMORKIEWICZ; MOTION CARRIED 5-0.

H. Consider 2016 Halloween Trick or Treat Date and Time.

John Steinbrink:

I thought this was kind of early. But then when you go to Costco and other stores all the costumes are out and the big pumpkins are out so I guess it's the time.

Mike Pollocoff:

Yeah, this is the one we've all been waiting for. If you think back in order to get some more feedback we put this out on open Village Hall. And out of 176 individuals who visited the topic 131 left feedback regarding a date and time. Of the 131 pieces of feedback 63 percent were on form and 60 percent were off form meaning you need to complete a form so we're sure where you live and it's a legitimate response.

Of the on form feedback the tally showed that 33 of 63 respondents preferred to have trick or treat on Sunday prior to Halloween from 3 to 6. Feedback revealed that 30 of 63 respondents preferred to have trick or treat from 4 to 7. One of the respondents resides in the City of Kenosha while the remaining ones are in Pleasant Prairie. So true to democracy it's almost an even split for who preferred to have it at night or in the afternoon.

If you go through the form comments, I think it was interesting about how many people made a comment that although it's nice to do it at night when you were a kid, the safety considerations of doing this while it was still light, doing it on a Sunday so that people aren't running home from work trying to get the kids out at four o'clock and trying to get that done. I think from a staff perspective and the police department or anybody else we prefer to do this during the daytime. Not that Sundays are great. But if you go to creep into the nighttime slots then you start entering into a whole new recommendation. So it would be my recommendation and based on the comments by a spread of four votes from residents that we stick with the traditional schedule of 3 to 6 on the Sunday before Halloween.

Dave Klimisch:

The safety concerns trump everything else in my mind. Little goblins in the dark are hard to see.

Kris Keckler:

Yeah, I read through the comments, and those that were left wanting to move it to Monday to match Kenosha and also honor Halloween there were several related to the fact that for the safety concern the parents really are responsible and they should be watching their kids. But I don't necessarily agree with that. Yes, I obviously think they're the primaries, but here we honored two outstanding units for the Village tonight based on the service and attention to detail and preventive care, and it's just a shame that we would want to gamble that, then lo and behold people are claiming why didn't we do a better job of servicing and providing safe passage. So I don't readily put that in a valid argument just to allow it on Halloween night. So I'd prefer it on Sunday as well.

Michael Serpe:

I move to concur with the Administrator's recommendation and keep it on Sunday from 3 to 6.

Dave Klimisch:

Second.

John Steinbrink:

Motion by Mike, second by Dave. Any further discussion?

SERPE MOVED TO SCHEDULE TRICK OR TREAT IN THE VILLAGE ON SUNDAY OCTOBER 30, 2016 FROM 3-6PM; SECONDED BY KLIMISCH; MOTION CARRIED 5-0.

Mike Pollocoff:

I have one more piece of information. I'd like to request that the Village Board at our next meeting which would be September 6th, Tuesday, we're going to be one day off because of the Labor Day Holiday, I'd like the Board to meet in Executive Session with legal counsel. If we could meet before the Board meeting so that counsel can give you some advice on items on the agenda. That would be at five o'clock. So if you could make plans to get here a little bit early that would be great.

John Steinbrink:

One question, Mike. I notice an item missing on here. We always had Village Board comments and that's been absent. Is there a reason for that?

Mike Pollocoff:

Well, we wanted the meetings to go fast. I don't know. That's probably just a slip up. I'll make sure it's on the next one. But as the Chair you can insert whatever you want on there.

John Steinbrink:

Anybody have anything they wish to add?

Dave Klimisch:

I recently spent some time with public works and out IT tech department. And I'm reminded of the phenomenal amount of work that goes on every day seamlessly. The team that John's got over at public works and that Dan's got in technology it was amazing to see how much was done. I was training today on the threats that come in every day via technology via the web. And I don't notice it, most of it probably don't even notice it. But the tech people are always anticipating, updating, firewalls, passwords. There's a lot that happens. And public works every day rain and shine, picking up 600 or 1,000 garbage cans plus the road crews plus the trees. Other departments do it as well so I applaud our staff as usual.

10. ADJOURNMENT

Michael Serpe:

Could I move to adjourn?

John Steinbrink:

Usually you do, yes.

Michael Serpe:

I'd like to do that.

Dave Klimisch:

Second.

SERPE MOVED TO ADJOURN THE MEETING; SECONDED BY KLIMISCH; MOTION CARRIED 5-0 AND MEETING ADJOURNED AT 7:02 P.M.

ORDINANCE NO. 16-27

ORDINANCE TO REPEAL AND RECREATE CHAPTER 287 OF THE MUNICIPAL CODE OF THE VILLAGE OF PLEASANT PRAIRIE, KENOSHA COUNTY, WISCONSIN RELATED TO SEX OFFENDER RESIDENCY

WHEREAS, the Village of Pleasant Prairie amended Chapter 287 of the Village Code related to sex offender residency on or about April 18, 2016, in order to create terms and conditions that are consistent with those of surrounding municipalities, and in order to comply with amendments to Wisconsin State laws concerning Chapter 980 placements; and

WHEREAS, regulation of sex offender residency is not an issue unique to the Village of Pleasant Prairie; to the contrary, virtually all, if not literally all, of the municipalities in the greater Milwaukee area regulate sex offender residency, and this is consistent with comparable regulations that, while not universally adopted, are very common throughout the State of Wisconsin and nationwide; and

WHEREAS, the Village Board now intends to revisit its regulation of sex offender residency, in light of assertions which challenge the Village's regulation of sex offender residency; and

WHEREAS, in revisiting the matter the Village Board hereby intends to, and does, reconsider the whole issue, from its most basic premises, to ensure that the regulations are tailored to the circumstances of Pleasant Prairie, while preserving the sole intent to protect children from potential recidivism of convicted child sex offenders; and

WHEREAS, in revisiting the matter, the Village Board again observes the risks posed by sex offenders against children, which risks are nationally recognized in such landmark legislation as the 1994 Jacob Wetterling Crimes Against Children and Sexually Violent Offender Registration Act; 1996 Megan's Laws; and the 2006 Adam Walsh Child Protection and Safety Act; and these risks are also recognized by legislation in every State in the United States of America including Wisconsin; and

WHEREAS, the Village Board finds that the data concerning child sex offenders is horrific and demonstrates the need for action, including the following[1]:

- "sex crimes are unfortunately fairly common in the United States."

[1]Center for Sex Offender Management (CSOM) statistics. CSOM is a collaborative effort of the U.S. Department of Justice, Office of Justice Programs, the National Institute of Corrections, the State Justice Institute, and the American Probation and Parole Association, and these quoted statistics are from its "Fact Sheet: What You Need to Know about Sex Offenders".

- "It is estimated that one in every five girls and one in every seven boys are sexually abused by the time they reach adulthood."
- "Children are particularly vulnerable. Approximately 67% of all victims of reported sexual assaults are under the age of 18, and more than half of these victims are under the age of 12."
- "Most sexual offenses are committed by someone the victim knows … or acquaintance."
- "No single factor or combination of factors can fully explain why someone offends sexually, though some factors may combine to increase people's tendency to offend. These factors are … [physiological, sociocultural, developmental] and situational/circumstantial (e.g. having easy access to victims…)."
- "About 12% to 24% of sex offenders will reoffend."

WHEREAS, the Village Board also finds these statistics of the U.S. Department of Justice to be shocking and a call to action[2]:

- "Approximately 1.8 million adolescents in the United States have been victims of sexual assault.
- "An estimated 60% of perpetrators of sexual abuse are known to the child but are not family members, e.g. family friends, babysitters, child care providers, neighbors."

WHEREAS, the Village Board is not inclined to sit idly by and do nothing to protect children within the Village when these most vulnerable members of our community face these documented threats from offenders who are highly prone to re-offend if given the opportunity to do so; and

WHEREAS, the Village Board has reviewed many studies and reports concerning recidivism of sex offenders and the effectiveness of sex offender residency restrictions[3], and has been fully advised in the matter; and

WHEREAS, the literature on the subject includes some studies that support the practice of imposing sex offender residency restrictions and others that are critical of the practice; and

---

[2] U.S. Department of Justice, National Sex Offender Public Website "Facts and Statistics"

[3] These include but are not limited to: Recidivism of sex offenders released from prison in 1994, U.S. Department of Justice, Office of Justice Programs, copyright November 2003; The final report of the Commission to Improve Community Safety and Sex Offender Accountability, of the State of Maine, dated January 2004; Sex Offender Recidivism Prediction, Correctional Service of Canada dated October 14, 2004; Recidivism of Sex Offenders, May 2001, Center for Sex Offender Management; Treating Sex Offenders, Wisconsin Lawyer Magazine, October 1994; The Impact of Residency Restrictions on Sex Offenders and Correctional Management Practices: A Literature Review, Marcus Nieto and Professor David Jung, California Research Bureau, California State Library, August 2006; Sex Offenders: You Are Now Free to Move About the Country, and Analysis of Doe v. Miller's Effects on Sex Offender Residential Restrictions, UMKC Law Review, Spring 2005; There Goes the Neighborhood? Estimates of the Impact of Crime Risk on Property Values from Megan's Laws, Linden and Rockoff, National Bureau of Economic Research, May 2006; The Effect of Proximity to a Registered Sex Offender's Residence on Single-Family Housing Selling Price, Goliath Appraisal Journal, July 2003; Sex Offenders, Sexually Violent Predators, Punishment, Residence Restrictions and Monitoring, California Proposition 83, Analysis by the Legislative Analyst; An Evaluation of Sex Offender Residency Restrictions in Michigan and Missouri, Huebner, et al., 2013.

WHEREAS, the Village Board finds it to be significant that some of the key studies that have concluded that sex offender residency restrictions have limited effectiveness have added significant qualifications to that conclusion; e.g. in "An Evaluation of Sex Offender Residency Restrictions in Michigan and Missouri," (Huebner, et al., 2013), the authors generally do not support sex offender residency restrictions, but nevertheless find that following adoption of sex offender residency restrictions "the rate of recidivism for technical violations significantly decreased for Missouri sex offenders…" (id. at 9) and "the number of sex offense convictions did decline…" in Missouri (id. at 10); and

WHEREAS, the Village Board recognizes the merits, mentioned in some studies, of individualized consideration of the risks and benefits of residency restrictions on an offender-by-offender basis, though this assessment of risks is not a perfect science and could give rise to equal protection or other enforcement concerns; and on the local level it is important to provide clear information to those who may want to locate in the Village, including a map of available residency locations; and the Village Board finds that this desire for uniformity and clarity outweighs the desire for individualized consideration at the Village level, in general; and

WHEREAS, in review of the residency restrictions of communities throughout Kenosha County and its environs, the Village Board finds that many of such communities have an "original domicile restriction," which allows each community to take back its own while not adding an additional burden of more than its own sex offenders to its community; such burdens including neighborhood and citizen concerns and responses, risks of recidivism, and potential property value impacts[4]; and

WHEREAS, if the Village of Pleasant Prairie would not have an original domicile restriction, the Village would have open doors for non-resident sex offender residency when other communities have closed doors, inviting a substantial increase in child sex offender placements, with the related adverse impacts on the health, safety and welfare of the Village and its residents; and

WHEREAS, the Village Board believes that for all but the most severe offenders, this risk of adverse impact declines as time passes following the date of a Designated Offender's offense, as the offender matures, recovers and reintegrates with society over time; and if this results in the offender being removed from the State registration list, the offender is thereby automatically removed from the Village residency restrictions; but even if State registration is required, once ten years has passed from the date of the most recent offense giving rise to the

---

[4] Property value impacts have been noted in numerous studies, including "The Effect on Proximity to a Registered Sex Offender's Residence on Single-Family House Selling Price," Larsen, J., Lowery, K., & Coleman, J. (2003), *The Appraisal Journal*, 71(3), 253-65; and "Neighborhood Tipping and Sorting Dynamics in Real Estate; Evidence from the Virginia Sex Offender Registry," Wentland, Bain, Brastow, Stoll, Waller, *Social Science Research* Network, April 2013. Property values are only one such impact. Stop it Now, a non-profit organization devoted to sex offender research, offers this advice to those concerned about sex offenders moving into a neighborhood, among others: Create a family safety plan; attend notification meetings; notify the police of suspicious activity; and don't wait to take action for prevention. At a minimum, this heightened awareness and activity burdens the families and neighbors where sex offenders are placed, and collectively this burdens the Village staff and resources, for every Designated Offender placement.

Designated Offender designation, provided it is not a Class A felony against a child, the Village Board finds it is appropriate to remove the original domicile restriction and allow such reformed citizen to move into the Village of Pleasant Prairie in compliance with this ordinance; and by opening this door the Village Board hopes that it is establishing a precedent for its surrounding communities to open their doors as well; and

WHEREAS, the Village Board recognizes that it cannot eliminate all risk of child sex offender re-offense, and it must balance all of the competing public policies, but intends by these regulations to strike the legislative balance that is appropriate for the circumstances of the Village of Pleasant Prairie; and

WHEREAS, it is not the intent of this ordinance to banish sex offenders from residing within the Village of Pleasant Prairie, and careful attention has been given to ensure that there are ample locations for sex offenders to reside within the Village of Pleasant Prairie in compliance with the requirements of this ordinance; and

WHEREAS, in reconsidering the matter, having given the matter due consideration, and having based its determination on the effect of the amendments on the health, safety and welfare of the community and the immediate neighborhoods affected and the current and future Village residents who are child sex offenders, and having given due consideration to the municipal problems involved, hereby determines that the following amendments to Chapter 287 will appropriately support the public health, safety and general welfare of the Village of Pleasant Prairie, will not be hazardous, harmful, noxious, offensive and will not for any other reason cause a substantial adverse effect on the property values and general desirability of the Village neighborhoods.

NOW, THEREFORE, BE IT ORDAINED AND ESTABLISHED by the Board of Trustees of the Village of Pleasant Prairie, Kenosha County, Wisconsin that Section 287 of the Municipal Code is repealed, subject to continuation as noted below, and recreated to read as follows:

Article I. Residency and Activity Restrictions

§287-1. Purpose.

A. It is the purpose of this chapter not to impose a criminal penalty but rather to service the Village of Pleasant Prairie's compelling interest to promote, protect and improve the health, safety and welfare of the citizens of the Village of Pleasant Prairie by creating areas around locations where children regularly congregate in concentrated number wherein certain sexual offenders and sexual predators are prohibited from establishing temporary or permanent residency.

B. Repeat sexual offenders, sexual offenders who use physical violence and sexual offenders who prey on children are sexual predators who present an extreme threat to the public safety. Sexual offenders are extremely likely to use physical violence and to repeat their

offenses, and most sexual offenders commit many offenses, have many more victims that are never reported, and are prosecuted for only a fraction of their crimes. This makes the cost of sexual offender victimization to society at large while incalculable, clearly exorbitant.

§ 287-2. Definitions.

In this chapter, the following words shall have the following meanings:

CHILD

A person under the age of 16 years, for purposes of this chapter.

DESIGNATED OFFENDER

Any person who is required to register under §301.45, Wis. Stats., for any sexual offense against a child, or any person who is required to register under §301.45, Wis. Stats., and who has been designated a special bulletin (SBX) sex offender pursuant to §301.46(2) and (2m), Wis. Stats.

MINOR

A person under the age of 18 years.

PERMANENT RESIDENCE

A place where the Designated Offender lodges or resides for 14 or more consecutive days.

PROHIBITED ACTIVITY

Participation in a holiday event involving Minors. Holiday events in which the Designated Offender is the parent or guardian of the Minors involved, and no non-familial Minors are present, are exempt from the definition of Prohibited Activity. A Designated Offender participates in a Prohibited Activity by taking part in the event which shall include, without limitation, distributing candy or other items to children on Halloween, wearing a Santa Clause costume on or preceding Christmas, or wearing an Easter Bunny costume on or preceding Easter.

PROHIBITED LOCATION

Any school, licensed day-care center, park, trail, playground, or place of worship. The Village Administrator shall maintain an official map showing the prohibited locations and safety zones within the Village. The Village Administrator shall update the map at least annually to reflect any changes in the prohibited locations and safety zones. The map shall be available in the office of the Village Clerk and posted on the Village website.

SAFETY ZONE

A Safety Zone is any real property that supports or upon which there exists any facility used for or that supports a school for Minors, a public park, a park facility, a trail or any other Prohibited Location, including any sidewalks or lawn adjacent to such Prohibited Location.

TEMPORARY RESIDENCE

Either:

A. A place where the person abides, lodges or resides for a period of 14 or more days in the aggregate during any calendar year and which is not the person's permanent address; or

B. A place where the person routinely abides, lodges or resides for a period of four or more consecutive or nonconsecutive days in any month and which is not the person's Permanent Residence.

VILLAGE

The Village of Pleasant Prairie, Wisconsin

§ 287-3. Sexual Offender and Sexual Predator Residence Prohibitions; Exceptions.

A. Prohibited Location of Residence. It shall be unlawful for any Designated Offender to establish a Permanent Residence or Temporary Residence within One Thousand Five Hundred feet (1,500') of a Prohibited Location.

B. Original Domicile Restriction. It shall be unlawful for any Designated Offender to establish a Permanent Residence or Temporary Residence within the Village unless the Designated Offender was legally domiciled in the Village at the time of the offense resulting in the person's most recent conviction for committing the sexually violent offense and/or crime, subject to the following. This restriction does not apply if the Designated Offender's most recent conviction of an offense that is within the definition of Designated Offender occurred 10 years or more prior to taking occupancy within the Village, provided the Designated Offender has not been convicted of a Class A felony against a child.

C. Determination of minimum distance separation. For purposes of determining the minimum distance separation under this chapter, the requirement shall be measured by following a straight line from the closest point of the outer property line of the Permanent Residence or Temporary Residence of a Designated Offender to the nearest outer property line of a Prohibited Location. If any portion of a tax parcel contains a Prohibited Location, the entire tax parcel shall be considered a Prohibited Location. If any portion of a tax parcel would constitute a Prohibited Location of Residence under Section 287-3A, the entire tax parcel shall be considered a Prohibited Location of Residence.

D. Exceptions. A Designated Offender residing within a Prohibited Location of a Residence as described in § 287-3A and 3B shall not be in violation of this chapter if any of the following apply:

(1) Subject to § 287-5A below, The Designated Offender established the Permanent Residence or Temporary Residence and reported and registered the residence pursuant to §301.45, Wis. Stats., before the initial effective date of the relevant provision of this chapter, and the Designated Offender has resided in such Permanent Residence or Temporary Residence continuously since the effective date of this chapter, except for temporary absences of no more than thirty (30) consecutive days.

(2) The Designated Offender is a Minor and is not required to register under §§ 301.45 and 301.46, Wis. Stats.

(3) The Prohibited Location situated within 1,500 feet of the person's Permanent Residence was opened or established after the Designated Offender established the Permanent Residence and reported and registered the residence pursuant to §301.45, Wis. Stats.

(4) The residence is also the primary residence of the Designated Offender's parents, grandparents, siblings, spouse or children, provided that such parent, grandparent, sibling, spouse or child established the residence at least two years before the Designated Offender established residence at that location, subject to the following. The Designated Offender is prohibited from residing in such location if a victim of an offense giving rise to the Designated Offender's designation also resides in the residence and is a Minor, unless the Designated Offender is on probation or parole and residing with the victim is approved in writing by the probation or parole officer; and if not on probation or parole, such location is prohibited unless approved in writing by the Pleasant Prairie Chief of Police, based upon a finding that the circumstances of the offense, the Designated Offender, the victim, and all relevant information in the matter substantially eliminates the risk of re-offense against the victim.

§287-4. Sexual Offender and Sexual Predator Prohibited Activity Restrictions.

A. Safety Zone Prohibition. A Designated Offender shall not enter upon or be present upon or within a Safety Zone, except as set forth below in §287-4.B.

B. Exceptions. A Designated Offender who enters upon or who is present upon or within a Safety Zone does not commit a violation of this §287-4 if any of the following apply:

1. The property also supports a church, synagogue, mosque, temple, or other house of religious worship, subject to all of the following conditions:

    a. The Designated Offender's entrance and presence upon the property occurs only during hours of worship or other religious programs/services as posted to the public; and

    b. The Designated Offender shall not participate in any religious education programs that include Minors.

2. The property also supports a use lawfully attended by a Designated Offender's natural or adopted child, for which a child's use reasonably requires the attendance of the Designated Offender as the child's parent upon the property, subject to the following condition:

    a. The Designated Offender's entrance and presence upon the property occurs only during hours of activity related to the use, as posted to the public, and only as reasonably necessary in connection with such activity.

3. The property also supports a polling location in a local, state or federal election, subject to all of the following conditions:

    a. The Designated Offender is eligible to vote;

    b. The property is the designated polling place for the Designated Offender; and

    c. The Designated Offender enters the polling place property, proceeds to cast a ballot with whatever usual and customary assistance is available to any member of the electorate, and vacates the property immediately after the voting.

4. The property also supports a school lawfully attended by a Designated Offender as a student under which circumstances the Designated Offender may enter upon the property supporting the school at which the Designated Offender is enrolled for such purposes, and at such times, as are reasonably required for the educational purposes of the school.

5. The property also supports a court, government office or room for public governmental meetings, subject to all of the following conditions:

    a. The Designated Offender is on the property only to transact business at the government office or place of business, other than a public library, or to attend an official meeting of a governmental body; and

b. The Designated Offender leaves the property immediately upon completion of the business or meeting.

C. Prohibited Activity. It is unlawful for a Designated Offender to participate in a Prohibited Activity.

§ 287-5. Property Owners Prohibited from Renting Real Property to Certain Offenders and Sexual Predators; Notification Requirements.

A. Property Owner Restrictions. It shall be unlawful for any property owner to lease or rent any place, structure, mobile home, trailer or any part thereof, with the knowledge that it will be used as a Permanent Residence or Temporary Residence by any person prohibited from establishing a Permanent Residence or Temporary Residence therein pursuant to this chapter, if such place, structure, mobile home, trailer or any part thereof is located within a Prohibited Location of a Residence as defined in §287-3A.

B. Notice to Chief of Police. A Designated Offender, and any property owner who leases or rents any place, structure, mobile home, trailer or any part thereof, with the knowledge that it will be used as a Permanent Residence or Temporary Residence by any person who is a Designated Offender, must each notify the Village Police Chief in writing a minimum of twenty-eight (28) days prior to establishing either a Permanent Residence or Temporary Residence within the Village. In addition, any property owner who has leased or rented any place, structure, mobile home, trailer or any part thereof as a Permanent Residence or Temporary Residence by any person who is a Designated Offender, at any time during a calendar year, shall report in writing to the Village Police Chief as to the status of the leasing or renting by the Designated Offender, including without limitation, the names of all Designated Offenders who lease or rent any portion of such place, structure, mobile home, trailer or any part thereof as of December 1 of such calendar year, the remaining lease term under the current lease for each Designated Offender, and if a Designated Offender no longer leases or rents such place, structure, mobile home, trailer or any part thereof, the date said Designated Offender no longer leased or rented such place. All such information shall be provided in writing to the Village Police Chief on or before December 31 of each calendar year.

C. Notice to Property Owner. A Designated Offender shall tell any property owner from whom the Designated Offender intends to lease or rent any place, structure, mobile home, trailer or any part thereof, that the Designated Offender is a Designated Offender as defined in §287-2, prior to entering into any lease or rental arrangement.

§ 287-6. Exception for Placements under Chapter 980 of the Wisconsin Statutes.

To the extent required by Section 980.135 of the Wisconsin Statutes, and notwithstanding the foregoing provisions of this chapter, the Village of Pleasant Prairie hereby exempts and may not enforce any portion thereof that restricts or prohibits a sex offender from

residing at a certain location or that restricts or prohibits a person from providing housing to a sex offender against an individual who is released under Wisconsin Statutes Section 980.08, or against a person who provides housing to such individual, so long as the individual is subject to supervised release under Chapter 980 of the Wisconsin Statutes, the individual is residing where he or she is ordered to reside under Section 980.08 of the Wisconsin Statutes, and the individual is in compliance with all court orders issued under Chapter 980 of the Wisconsin Statutes.

§ 287-7. Severability.

Should any section, paragraph, sentence, clause or phrase of this chapter be declared unconstitutional or invalid for any reason, or be repealed, it shall not affect the validity of this Ordinance as a whole, or any part thereof, other than the part so declared to be invalid or repealed.

§ 287-8. Injunction.

If a Designated Offender or property owner violates any provision of this chapter the Village may, in addition to all other rights and remedies allowed by law or this chapter, refer the matter to an attorney chosen by the Village Administrator to bring an action in the name of the Village in circuit court to seek a temporary restraining order, temporary injunction or permanent injunction against such Designated Offender or property owner to prevent them from violating the terms of this chapter or to take any action, or prevent any action, necessary for compliance with the terms of this chapter.

§ 287-9. Penalties.

Any person, firm or entity who violates any provisions of this chapter shall, upon conviction thereof, be subject to a forfeiture not to exceed One Thousand Dollars ($1,000.00), together with the costs of prosecution, and in default of payment thereof, shall be committed to jail for a period not to exceed ninety (90) days. Each violation and each day such violation continues shall be considered a separate offense. Neither the issuance of a citation nor the imposition of a forfeiture hereunder shall preclude the Village from seeking or obtaining any and all legal and equitable remedies available by law or this chapter.

§ 287-10. Continuation.

The provisions of this Chapter 287, insofar as they are substantively the same as those of the ordinances in force immediately prior to the enactment of the Chapter or amendments hereto, are intended and hereby declared as a continuation of such ordinances and not as new enactments, and the effectiveness of such provisions shall be from the date of the first adoption of such provisions.

§ 287-11. Effective Date.

This chapter, as amended and restated above, shall take effect upon its passage on this _____day of _____, 2016.

Passed and adopted this _____day of _____, 2016.

VILLAGE OF PLEASANT PRAIRIE

_____
John P. Steinbrink, President

ATTEST:

_____
Jane M. Romanowski, Clerk

Posted: _____

B:\MyFiles\RDB\Pleasant Prairie\Sex Offender Ordinance\Sex Offender Residency Ordinance.VPP.clean.08-24-16

Consider the request of Matt Carey, PE, agent for approval of a **Certified Survey Map** for the property located at the southwest corner of STH 165 (104th Street and 80th Avenue) in LakeView Corporate Park.

Recommendation: Plan Commission recommends that the Village Board approve the Certified Survey Map subject to the comments and conditions of the Village Staff Report of September 6, 2016.

VILLAGE STAFF REPORT OF SEPTEMBER 6, 2016

Consider the request of Matt Carey, PE, agent for approval of a **Certified Survey Map** for the property located at the southwest corner of STH 165 (104th Street and 80th Avenue) in LakeView Corporate Park.

On August 22, 2016 the Plan Commission conditionally approved Preliminary Site and Operational Plans for Doheny Enterprises, Inc. to begin mass grading, to install underground utilities and to construct footings and foundations for the construction of 175,000 square foot industrial building on the vacant property located at the southeast corner of STH 165 (104th Street) and 80th Avenue (Tax Parcel Number 92-4-122-281-0258) in LakeView Corporate Park for the construction of a 175,000 square foot building and associated on-site improvements. *Note: Final Site and Operational Plans pursuant to the requirements of the Village Zoning Ordinance shall be submitted for review and approval by the Plan Commission prior to issuance of the full building permit.]*

Doheny's is a leader in the swimming pool supply industry with 10 distribution centers nationwide. Doheny's has been in the City of Kenosha for 20 years and currently occupies 3 warehouses there with plans to consolidate those locations into a single distribution center in Pleasant Prairie. Doheny's sells swimming pool supplies to the consumer and commercial markets via catalogs, websites, outbound telemarketing and a local retail pool store. The primary function of the proposed distribution center is to house the contact center and for warehousing functions of pick, pack and shipping via FedEx, UPS, and common carrier. The company will not manufacture or assemble any items at this facility and it will act solely as storage of dry finished goods that include swimming pool chemicals, pool equipment, and accessories. The company is seasonal with peak employment and inbound outbound shipping traffic during the warmer months of the year.

Construction will start in the fall of 2016 with a completion in 2017.

The petitioner is requesting approval of a Certified Survey Map. The CSM shall be revised to create an outlot surrounding the existing retention basin shown on Lot 1 since this basin serves several surrounding properties and the maintenance and associated costs are likely a shared expense. In addition, the petitioners shall request a Zoning Map Amendment to rezone the outlot into the PR-1 Park and Recreational District (all ponds on separate outlots shall be located within the PR-1 District) and to amend the Village Comprehensive Plan to place the outlot within the open space land use designation.

The CSM indicates that there are wetlands on the property. The petitioner is seeking an artificial wetland exemption from the Wisconsin Department of Natural Resources (DNR) to allow the wetlands to be filled. If this approval is obtained from the DNR, a copy of that approval shall be provided to the Village and the wetlands as shown on the CSM shall be removed.

Plan Commission recommends that the Village Board approve the Certified Survey Map subject to above comments and the following conditions:

1. The changes as shown on the ***attached*** CSM shall be made and the CSM shall be resubmitted to the Village Staff for final review prior to executing and recording at the Kenosha County Register of Deeds Office.

2. The Village staff recommends that the CSM be revised to create an outlot surrounding the existing retention basin shown on Lot 1 since this basin serves several surrounding properties and the maintenance and associated costs are likely a shared expense. In addition, the petitioners shall request a Zoning Map Amendment

to rezone the outlot into the PR-1 Park and Recreational District (all ponds on separate outlots shall be located within the PR-1 District) and to amend the Village Comprehensive Plan to place the outlot within the open space land use designation. These applications shall be submitted and will be considered at the same time that the Final Site and Operational Plans are considered.

3. The CSM indicates that there are wetlands on the property. The petitioner is seeking an artificial wetland exemption from the Wisconsin Department of Natural Resources (DNR) to allow the wetlands to be filled. If this approval is obtained from the DNR, a copy of that approval shall be provided to the Village and the wetlands as shown on the CSM shall be removed.

4. Any outstanding taxes or special assessments shall be paid prior to recording the CSM.

5. The CSM shall be finalized, executed and recorded at the Kenosha County Register of Deeds Office and a recorded copy of the CSM shall be provided to the Village within 30 days of Village Board's approval and prior to issuance of building permit.

6. The CSM shall be recorded prior to issuance of the required building permit.

CERTIFIED SURVEY MAP NO. _____

Being a redivision of Parcel 58 of Certified Survey Map No. 2178, being a part of the Northwest 1/4 of the Northeast 1/4 of Section 28, Town 1 North, Range 22 East, in the Village of Pleasant Prairie, County of Kenosha, State of Wisconsin.

VICINITY SKETCH
SCALE 1"=2000'

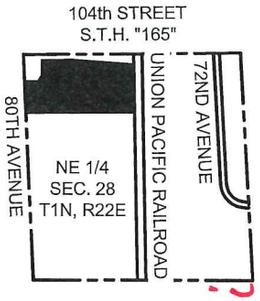

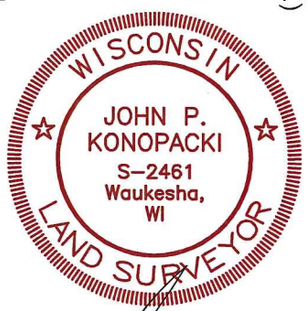

AUGUST 12, 2016

Subject Property
Zoning: M2 General Manufacturing District
Tax Key Number: 92-4-122-281-0258

Bearings refer to the Wisconsin State Plane Coordinate System, South Zone (N.A.D. 1927). The west line of the Northeast 1/4 of Section 28, Township 1 North, Range 22 East has a reference bearing of S02°45'26"E.

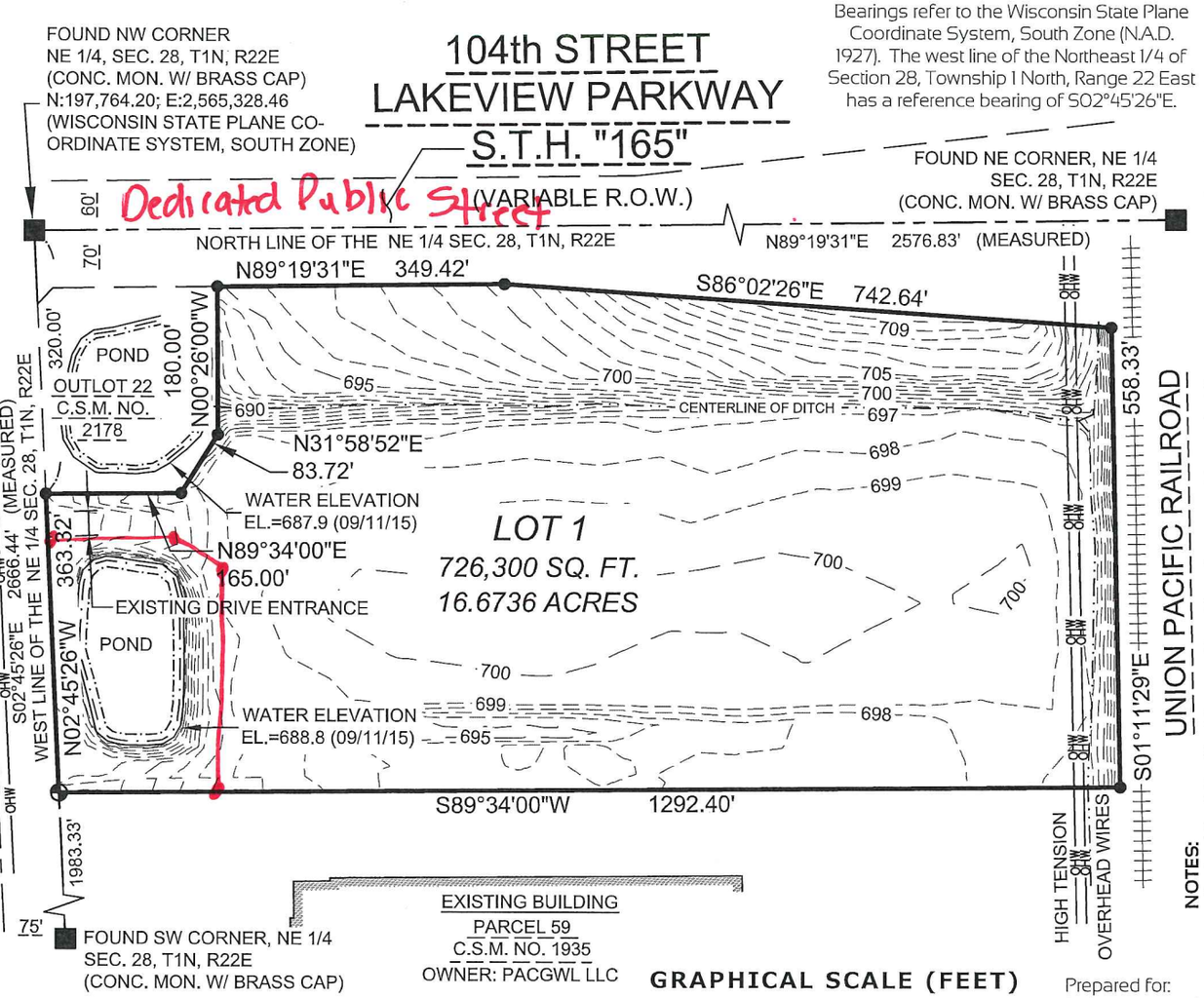

LEGEND:
- Denotes Found Capped 3/4" Iron Rod.
- Denotes Set 3/4" X 18" Iron Rebar, 1.5 LBS./FT.
- Denotes Found Mag Nail.

GRAPHICAL SCALE (FEET)
0 1" = 200' 400'

Prepared for:
Doheny Enterprises, Inc.
6950 51st Street
Kenosha, WI 53144
847-366-6460

NOTES:
- Outlot 22 of Certified Survey Map No. 2178 owned by: LAKEVIEW CORPORATE PARK OWNERS ASSOCIATION INC.
- Vertical Datum: National Geodetic Vertical Datum of 1929 (NGVD29). Contours are shown at a 1' interval based on actual ground survey of the current ground terrain. Reference Benchmark: Concrete monument with brass cap at the northwest corner of the Northeast 1/4 Section 28, Town 1 North, Range 22 East, Elevation = 690.73.
- Flood Zone Classification: The property lies with in Zone "X" of the Flood Insurance Rate Map Community Panel No. 55059C0194D with an effective date of JUNE 19, 2012.
- All measurements have been made to the nearest one-hundreth of a foot and all angular measurements have been made to the nearest one second.

Prepared By:
PINNACLE ENGINEERING GROUP
15850 BLUEMOUND ROAD I SUITE 210
BROOKFIELD, WI 53005
OFFICE: (262) 754-8888

This instrument drafted by John P. Konopacki, PLS-License No. S-2461

PEG JOB#559.00
SHEET 1 OF 7

CERTIFIED SURVEY MAP NO. _____

Being a redivision of Parcel 58 of Certified Survey Map No. 2178, being a part of the Northwest 1/4 of the Northeast 1/4 of Section 28, Town 1 North, Range 22 East, in the Village of Pleasant Prairie, County of Kenosha, State of Wisconsin.

NORTH

EXISTING EASEMENTS

NOTES:
- No Access along State Trunk Highway "165" per Certified Survey Map No. 1935 and Certified Survey Map No. 2178.
- Subject property serviced by municipal sanitary sewer and water.

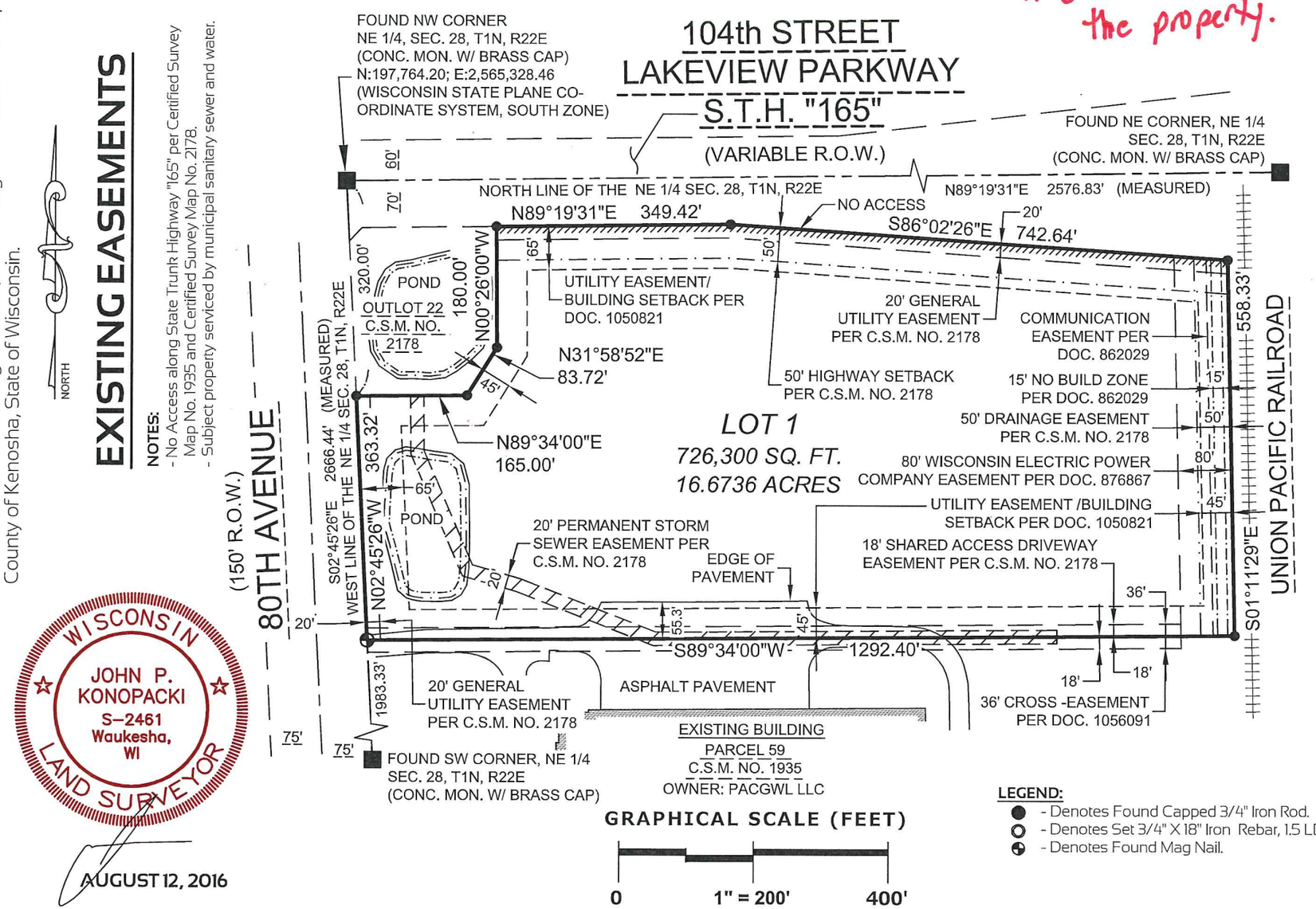

LEGEND:
- ● - Denotes Found Capped 3/4" Iron Rod.
- ○ - Denotes Set 3/4" X 18" Iron Rebar, 1.5 LBS./FT.
- ◐ - Denotes Found Mag Nail.

WISCONSIN
JOHN P. KONOPACKI
S-2461
Waukesha, WI
LAND SURVEYOR

AUGUST 12, 2016

Provide copies of all written easements recorded on the property.

Prepared By:
PINNACLE ENGINEERING GROUP
15850 BLUEMOUND ROAD I SUITE 210
BROOKFIELD, WI 53005
OFFICE: (262) 754-8888

This instrument drafted by John P. Konopacki, PLS-License No. S-2461

CERTIFIED SURVEY MAP NO. _____

Being a redivision of Parcel 58 of Certified Survey Map No. 2178, being a part of the Northwest 1/4 of the Northeast 1/4 of Section 28, Town 1 North, Range 22 East, in the Village of Pleasant Prairie, County of Kenosha, State of Wisconsin.

PROPOSED EASEMENTS

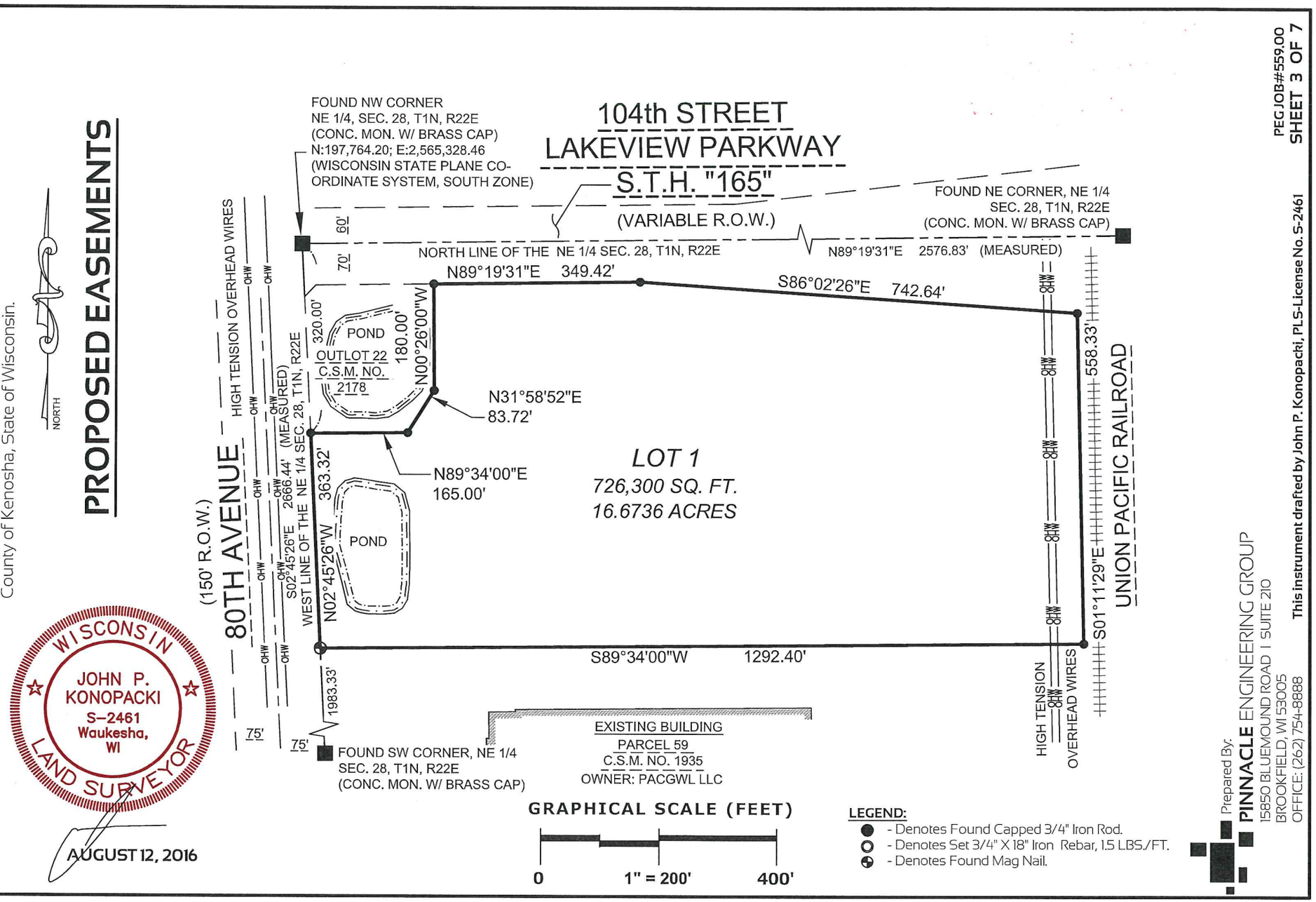

WISCONSIN
JOHN P. KONOPACKI
S-2461
Waukesha, WI
LAND SURVEYOR

AUGUST 12, 2016

PEG JOB#559.00
SHEET 3 OF 7

This instrument drafted by John P. Konopacki, PLS-License No. S-2461

Prepared By:
PINNACLE ENGINEERING GROUP
15850 BLUEMOUND ROAD I SUITE 210
BROOKFIELD, WI 53005
OFFICE: (262) 754-8888

CERTIFIED SURVEY MAP NO. _____

Being a redivision of Parcel 58 of Certified Survey Map No. 2178, being a part of the Northwest 1/4 of the Northeast 1/4 of Section 28, Town 1 North, Range 22 East, in the Village of Pleasant Prairie, County of Kenosha, State of Wisconsin.

NORTH

WETLANDS

NOTE:
- Wetlands delineated by Wetland & Waterway Consulting, LLC on July 17, 2016.

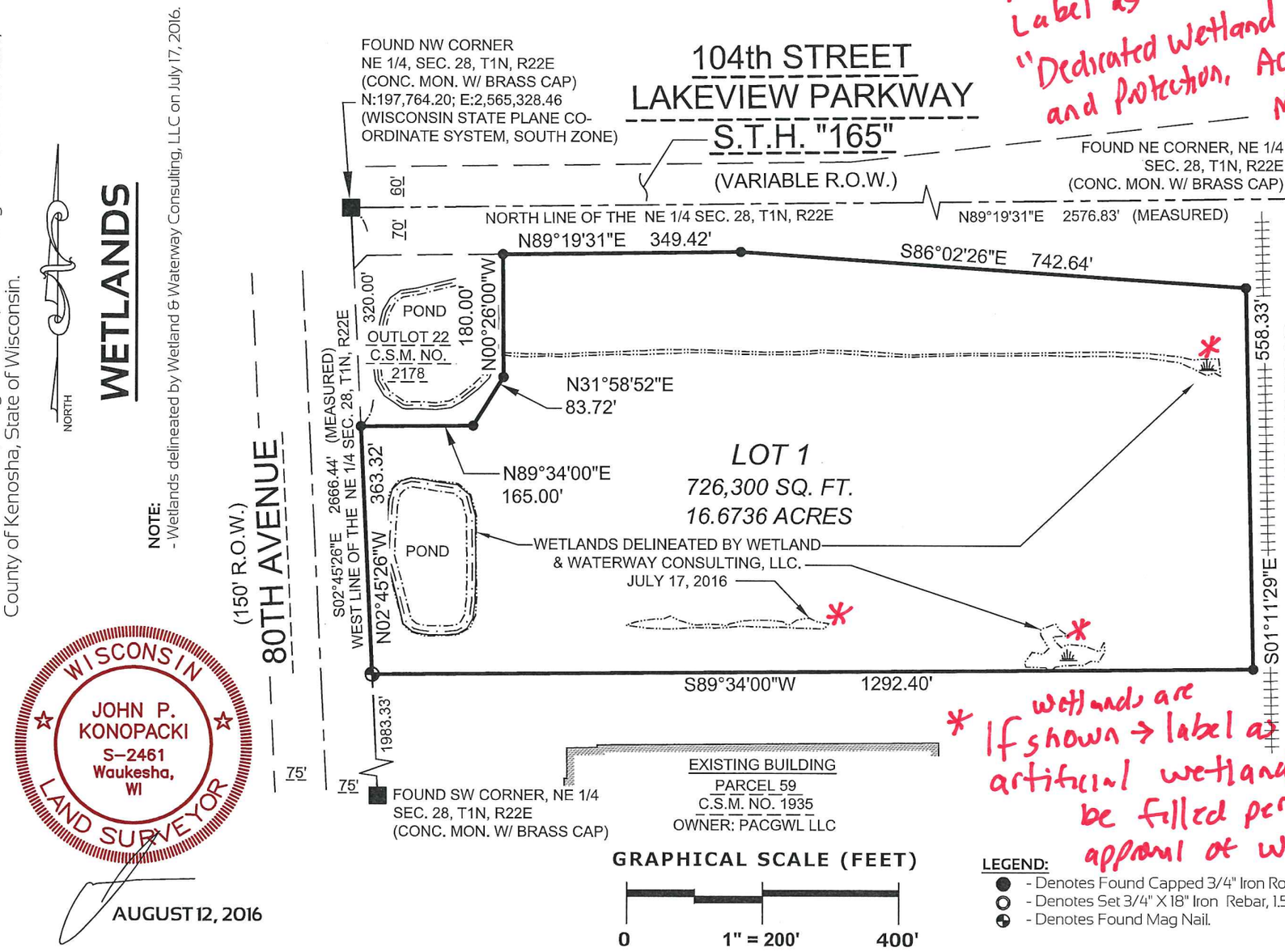

For wetlands that remain — Label as "Dedicated Wetland Preservation and Protection, ACWS and Maintenance Easement"

* If wetlands are shown → label as artificial wetlands to be filled per approval of WIDNR.

LEGEND:
- ● - Denotes Found Capped 3/4" Iron Rod.
- ○ - Denotes Set 3/4" X 18" Iron Rebar, 1.5 LBS./FT.
- ⊕ - Denotes Found Mag Nail.

WISCONSIN
JOHN P. KONOPACKI
S-2461
Waukesha, WI
LAND SURVEYOR

AUGUST 12, 2016

Prepared By:
PINNACLE ENGINEERING GROUP
15850 BLUEMOUND ROAD I SUITE 210
BROOKFIELD, WI 53005
OFFICE: (262) 754-8888

This instrument drafted by John P. Konopacki, PLS-License No. S-2461

CERTIFIED SURVEY MAP NO. _____

Being a redivision of Parcel 58 of Certified Survey Map No. 2178, being a part of the Northwest 1/4 of the Northeast 1/4 of Section 28, Town 1 North, Range 22 East, in the Village of Pleasant Prairie, County of Kenosha, State of Wisconsin.

SURVEYOR'S CERTIFICATE

STATE OF WISCONSIN)
WAUKESHA COUNTY) SS

I, John P. Konopacki, Professional Land Surveyor, do hereby certify:

That I have surveyed, mapped and redivided Parcel 58 of Certified Survey Map No. 2178, recorded in the Kenosha County Register of Deeds office on March 29, 2000, as Document No. 1177146, being a redivision of Parcel 58 of Certified Survey Map No. 1935, in the Northwest 1/4 of the Northeast 1/4 of Section 28, Town 1 North, Range 22 East, Village of Pleasant Prairie, Kenosha County, Wisconsin, which is bounded and described as follows:

Commencing at the northwest corner of said Northeast 1/4 of Section 28;
Thence South 02°45'26" East along the west line of said Northeast 1/4 and the east right of way line of 80th Avenue, 320.00 feet to the Point of Beginning;
Thence North 89°34'00" East along the south line of Outlot 22 of Certified Survey Map No. 2178, 165.00 feet;
Thence North 31°58'52" East along the east line of said Outlot 22, 83.72 feet;
Thence North 00°26'00" West along said east line, 180.00 feet to the south right of way line of 104th Street - Lakeview Parkway - State Trunk Highway "165";
Thence North 89°19'31" East along said south right of way line, 349.42 feet;
Thence South 86°02'26" East along said south right of way line, 742.64 feet to the west line of the Union Pacific Railroad;
Thence South 01°11'29" East along said west line, 558.33 feet to the north line of Parcel 59 of Certified Survey Map No. 1935;
Thence South 89°34'00" West along said north line, 1292.40 feet to the aforesaid west line of the Northeast 1/4 of Section 28 and the east right of way line of 80th Avenue;
Thence North 02°45'26" West along said east right of way line, 363.32 feet to the Point of Beginning.

Containing 726,300 Square Feet (16.6736 Acres) land more or less.

That I have made such survey, land division and map by the direction of Doheny Enterprises, Inc., owner of said land.

That such plat is a correct representation of all the exterior boundaries of the land surveyed and the land division thereof made.

That I have fully complied with the requirements of Chapter 236 of the Wisconsin State Statutes and the Village of Pleasant Prairie Land Division and Development Control Ordinance in surveying, mapping and dividing the same.

Date: AUGUST 12, 2016

WISCONSIN
JOHN P. KONOPACKI
S-2461
Waukesha, WI
LAND SURVEYOR

John P. Konopacki
Professional Land Surveyor S-2461

WISCONSIN DEPARTMENT OF TRANSPORTATION HIGHWAY TRANS 233 NOTES:

1. Setback Notes: There shall be no improvements or structures placed between the highway and the setback line.
2. Access Notes: As owner I hereby restrict all lots and blocks, in that no owner, possessor, user, nor licensee, nor other person shall have any right of direct vehicular ingress or egress with STH - "165", as shown on the plat; it being expressly intended that this restriction shall constitute a restriction for the benefit of the public according to §236.293, Stats., and shall be enforceable by the Department of Transportation.
3. Noise Notes: The lots of this land division may experience noise at the levels exceeding the levels in §Trans 405.04, Table I. These levels are based on federal standards. The Department of Transportation is not responsible for abating noise from existing state trunk highways or connecting highways, in the absence of any increase by the Department to the highway's through-lane capacity.

Prepared By:
PINNACLE ENGINEERING GROUP
15850 BLUEMOUND ROAD I SUITE 210
BROOKFIELD, WI 53005
OFFICE: (262) 754-8888

This instrument drafted by John P. Konopacki, PLS-License No. S-2461

CERTIFIED SURVEY MAP NO. _____

Being a redivision of Parcel 58 of Certified Survey Map No. 2178, being a part of the Northwest 1/4 of the Northeast 1/4 of Section 28, Town 1 North, Range 22 East, in the Village of Pleasant Prairie, County of Kenosha, State of Wisconsin.

The following "Dedication of Easement Provisions" and "Restrictive Covenants" were drafted by the Village of Pleasant Prairie and is shown heron as a condition of map approval. Inclusion thereof on this document is not to be considered practicing law in the State of Wisconsin by the above signed Land Surveyor, the Land Surveyor is not responsible for rights granted, perceived or otherwise stated herein.

DEDICATIONS and EASEMENTS :

Add add'l dedication and easement language

1. DEDICATED WETLAND PRESERVATION AND PROTECTION, ACCESS AND MAINTENANCE EASEMENT

A nonexclusive easement coextensive with the area shown as a Wetland Preservation and Protection, Access and Maintenance Easement area within Lot 1 on this CSM is hereby dedicated, given, granted and conveyed by the Owner to the Village for wetland protection and preservation and maintenance purposes and uses and for related ingress and egress. Unless the Village exercises the rights granted to it pursuant to this easement, the Village shall have no obligation to do anything related to its rights under this easement.

RESTRICTIVE COVENANTS :

1. The Owner hereby covenants that the Lot 1 Owner shall have the obligation of protecting and preserving the Wetland Preservation and Protection, Access and Maintenance Easement areas shown on Lot 1 of this CSM. Such preservation and maintenance shall include without limitation and as needed, removing of dead, dying or decayed trees, plant material or evasive species; re-planting wetland plant life as approved by the Village and the Wisconsin Department of Natural Resources; and removing of trash and debris in order to prevent a nuisance condition. No mowing or cutting of the wetland vegetation shall be allowed without the permission of the Village. No buildings, signage or fences shall be erected within the Wetland Preservation and Protection, Access and Maintenance Easement which may cause damage to the wetland area. The covenant shall run with the land and shall be binding upon the Owner of Lot 1 of this CSM, their successors, assigns and successors-in-title of the lands, in their capacity as Owners of such land, and shall benefit and be enforceable by the Village. The Owner of Lot 1 of this CSM shall perform such maintenance as may be needed, without compensation and to the satisfaction of the Village. This covenant will not restrict or prohibit the Owner of Lot 1 on this CSM from seeking and obtaining the required permits and approvals from the appropriate federal or State agencies having jurisdiction to fill or adjust the wetland areas on Lot 1 insofar as the appropriate permits and approvals are obtained from the federal, State and Village agencies prior to commencing any wetland disturbing or fill activities.

To the extent that the Village performs any such wetland related maintenance activities on behalf of the landowner, the Owner of Lot 1 shall be liable for any costs which may be incurred by the Village, which the Village may recover from such Owner as special assessments or special charges under Section 66.0627 (or successors and assigns or other similar provisions) of the Wisconsin Statutes or otherwise according to law. Unless the Village exercises the rights granted to it in the Dedication and Easement Provisions as referenced on this CSM, the Village shall have no obligation to do anything pursuant to its rights under the easement dedications.

Remove if wetlands are all filled

CONSENT OF CORPORATE MORTGAGEE

_____, a corporation duly organized and existing under and by virtue of the laws of the State of _____, mortgagee of the described land, does hereby consent to the surveying, dividing and mapping of the land described in the forgoing affidavit of John P. Konopacki, surveyor, and does hereby consent to the certification of owner.

IN WITNESS WHEREOF, the said _____, has caused these presents to be signed by _____, its President, and its corporate seal to be hereunto affixed this _____ day of _____, 2016.

_____ Date

_____ President

STATE OF WISCONSIN)
_____ COUNTY) SS

Personally came before me this _____ day of _____, 2016, _____, to me known to be the person who executed the foregoing instrument and to me known to be such officer of said corporation and acknowledged the same.

_____
Notary Public
Name:_____
State of Wisconsin
My Commission Expires: _____

WISCONSIN
JOHN P. KONOPACKI
S-2461
Waukesha, WI
LAND SURVEYOR

AUGUST 12, 2016

Prepared By:
PINNACLE ENGINEERING GROUP
15850 BLUEMOUND ROAD | SUITE 210
BROOKFIELD, WI 53005
OFFICE: (262) 754-8888

This instrument drafted by John P. Konopacki, PLS-License No. S-2461

PEG JOB#559.00

CERTIFIED SURVEY MAP NO. _____

Being a redivision of Parcel 58 of Certified Survey Map No. 2178, being a part of the Northwest 1/4 of the Northeast 1/4 of Section 28, Town 1 North, Range 22 East, in the Village of Pleasant Prairie, County of Kenosha, State of Wisconsin.

PLAN COMMISSION APPROVAL

Approved by the Plan Commission of the Village of Pleasant Prairie on this _____ day of _____, 2016.

_____ Date

_____ Thomas W. Terwall, Chairman

VILLAGE BOARD APPROVAL

Approved by the Village Board of the Village of Pleasant Prairie, Wisconsin, on this _____ day of _____, 2016.

_____ Date

_____ John P. Steinbrink, Village President

_____ Date

_____ Jane M. Romanowski, Village Clerk

OWNER'S CERTIFICATE

Doheny Enterprises, Inc., a corporation duly organized and existing under and by virtue of the laws of the State of _____, as owner, does hereby certify that said corporation caused the land described on this certified survey map to be surveyed, divided and mapped as represented on this certified survey map.

Doheny Enterprises, Inc., as owner, does further certify that this certified survey map is required by Chapter 236 of the Wisconsin State Statutes to be submitted to the following for approval or objection:

1. Village of Pleasant Prairie

IN WITNESS WHEREOF, the said Doheny Enterprises, Inc. has caused these presents to be signed by (name) _____, (title) _____, at _____, _____ County, (state) _____, on this _____ day of _____, 2016.

In the presence of: Doheny Enterprises, Inc.

_____
Name - Title

STATE OF _____)
_____ COUNTY) SS

Personally came before me this _____ day of _____, 2016, (name) _____, (title) _____, of the above named corporation, to me known to be the person who executed the foregoing instrument, and to me known to be such _____(title) of said corporation, and acknowledged that they executed the foregoing instrument as such officer as the deed of said corporation, by its authority.

_____
Notary Public
Name:_____
State of _____
My Commission Expires: _____

WISCONSIN
JOHN P. KONOPACKI
S-2461
Waukesha, WI
LAND SURVEYOR

JULY 13, 2016

Prepared By:
PINNACLE ENGINEERING GROUP
15850 BLUEMOUND ROAD | SUITE 210
BROOKFIELD, WI 53005
OFFICE: (262) 754-8888

This instrument drafted by John P. Konopacki, PLS-License No. S-2461

PEG JOB#559.00

DRAFT

DOHENY ENTERPRISES, INC.
DEDICATION AND EASEMENT PROVISIONS

1. The fee interest in the areas shown as a **Dedicated Public Street** on this Certified Survey Map (CSM) was previously dedicated, given, granted and conveyed by the previous landowner to the Village of Pleasant Prairie, its successors and assigns (the "Village") as it pertains to 80th Avenue and to the Wisconsin Department of Transportation (the "WI DOT") as it pertains to State Trunk Highway (STH) 165 for the construction, installation, repair, alteration, replacement, planting and maintenance of public highway improvements, uses and purposes, including, without limitation, pavement, curbs and gutters, bike lanes, if required by the Village or WI DOT, street signs, street lights, street trees, sanitary sewerage system improvements, water system improvements, storm sewer and drainage system improvements, utility and communications facilities, street tree landscaping, and for all related ingress and egress, construction, installation, repair, alteration, replacement, planting and maintenance activities. Such fee interest is subject to the following: a nonexclusive easement hereby reserved by the current Owner or the future Owner(s) of the Lot shown on this CSM which is adjacent to the Dedicated Public Street for the required planting, mowing, watering and maintenance of grass within the grassy terrace area, for the maintenance and replanting of street trees and the clearance, maintenance, repair and replacement of the bike lane, if required by the Village or WI DOT in the area between the roadway and the Lot. In the event of any conflict between the rights of the Village or the WI DOT under its existing fee interest in the Dedicated Public Street areas shown on this CSM and the rights of the Owner, or of the future Owners of the Lot, or of the LakeView Corporate Park Owners' Association, Inc. pursuant to the dedication retained herein, the rights of the Village or the WI DOT shall be deemed to be superior.

2. Perpetual nonexclusive easements coextensive with the areas shown as a **Dedicated 20' General Utility Easement** on this CSM were dedicated, given, granted and conveyed by the previous Owner as shown on CSM No. 2178 and recorded at the Kenosha County Register of Deeds Office for those utilities including, but not limited to, those commonly known as WE Energies, AT & T and Time Warner Cable Inc. and their respective successors and assigns (collectively the "Utility and Communications Grantees"), for the purposes of constructing, installing, operating, repairing, altering, replacing and maintaining utility and communication lines and other related facilities to serve Lot 1 and for any related ingress and egress. This Dedicated General Utility Easement shall also include the right to trim or cut down trees, bushes, branches, and roots as may be reasonably required, that are interfering with the Utility and Communication Grantees use of the easement areas. To the extent possible, all such utility and communications lines and facilities shall be installed underground. Upon the installation of the utility cables and related appurtenances, the elevation of the existing ground surface within the Dedicated General Utility Easement area shall only be altered in accordance with separate agreement between Utility and Communications Grantees and Grantor and as may be approved by the Village. Upon the installation of the utilities, restoration of all such land, as nearly as is reasonably possible, to the condition existing prior to installation of such utilities within the General Utility Easement areas on which such easements are located as

does not interfere with the purpose of the utility and communications easements and the use of such easements by the Utility and Communications Grantees in accordance with a separate agreement between the Grantor and Grantees regarding the transfer of the restoration and maintenance responsibilities. No buildings, fences, or structures of any kind shall be placed within the General Utility Easement areas without the prior written approval of the Utility and Communication Grantees.

The Village generally allows private utilities, including but not limited to electric and communications facilities, to be installed in public street rights-of-way areas with prior written approval from the Village, subject to the requirements of applicable Village ordinances and the requirements of such public uses and purposes of the Village. Further, each individual private utility, electric or communications company shall be responsible for promptly restoring the public street areas to their pre-existing condition, at its own cost, after any use of such areas. In the event the private companies do not restore the public street areas to a vegetatively stabilized condition, the Owner shall be ultimately responsible for the costs of such restoration and may pursue its remedies against the respective utility company(ies). Under no circumstances shall any private utility, electric or communications company conduct any open cutting of the public streets without prior written approval of the Village. Any such private utility or communications facilities shall be promptly relocated, at the cost of the individual utility, electric or communications company, upon written request of the Village, to serve the public functions and purposes of the Village in the public street area. In the event of any conflict between the rights of the Village and the rights of the private utility, electric or communications company in such public street areas, the Village's rights shall be deemed to be superior.

3. A perpetual nonexclusive easement coextensive with the area shown as a **Dedicated Storm Water Management, Retention Basin, Access and Maintenance Easement** within Outlot 1 on this CSM is hereby dedicated, given, granted and conveyed by Doheny Enterprises, Inc. to the Village for the Owner's and adjacent land owners private storm water drainage system improvements, storm water retention basin storage and conveyance, uses and purposes, and for all related ingress and egress, construction, installation, repair, alteration, replacement and maintenance activities. This Dedicated Storm Water Management, Retention Basin, Access and Maintenance Easement shall be exclusive, except for the Owner's use, planting and irrigating, care and maintenance of the Dedicated Storm Water Management, Retention Basin, Access and Maintenance Easement area on Outlot 1 as it will not interfere with the improvements, uses and purposes of the Village. Because off-site land corporate park owners are benefitting from the Outlot 1 retention basin and related storm water drainage system improvements, the Owner intends to dedicate Outlot 1 in a fee interest transfer to the LakeView Corporate Park Owners' Association, Inc. for private storm water drainage system improvements, storm water retention basin storage and conveyance, uses and purposes, and for all related ingress and egress, construction, installation, repair, alteration, replacement and maintenance activities. In the event of any conflicts between the rights of the Village pursuant to the Dedicated Storm Water Management, Retention Basin, Access and Maintenance Easement and the rights of any other persons or entities with respect to the Dedicated Easement, the Village's rights under this Easement shall be deemed to be superior.

RESTRICTIVE COVENANTS

1. The Owner hereby covenants that Doheny Enterprises, Inc. (the "Owner") or its successor-in-title (LakeView Corporate Park Owner's Association, Inc.) shall have the obligation of maintaining the **Dedicated Storm Water Drainage, Retention Basin, Access and Maintenance Easement** area shown as Outlot 1 on this CSM in a functional, neat and nuisance free condition to handle storm water in and draining to the Lot until and unless said Outlot 1 is transferred to the LakeView Corporate Park Owner's Association, Inc. as the new Outlot 1 Owner. Such maintenance shall include, without limitation and as needed, grading, seeding or sodding, maintaining erosion control methods to protect the drainageways; ditching to re-establish design capacity; removing of trash, debris, leaves and brush; clearing, repairing and replacing inlets, outlets and catch basin structures; mowing; and weeding to prevent nuisance conditions. The Outlot 1 Owner further covenants that there shall be no structures, fences, gates, signs, berming or altering of the grade of the land within the Easement area which blocks, diverts or re-routs the drainage flow or which might interfere with the storm water function and flow, unless express written approval is granted by the Village and subject to any such conditions as the Village may impose. This covenant shall run with the land, shall be binding upon the Owner, its successors, successors and assigns and successors-in-title of the land, in their capacity as the Owner of Outlot 1, and shall benefit and be enforceable by the Village.

   To the extent that the Village performs any such storm water drainage or retention basin related maintenance activities on the Outlot 1 property, the Owner shall be liable for any costs which may be incurred by the Village, which the Village may recover from such Owner as special assessments or special charges under Section 66.0627 (or successors or similar provisions) of the Wisconsin Statutes or otherwise according to law. Unless the Village exercises the rights granted to it in the Dedication and Easement Provisions on this CSM, the Village shall have no obligation to do anything pursuant to its rights under these easement dedications.

2. The Owner hereby covenants that the Lot 1 Owner shall have the obligation of planting, maintaining and replacing the **Street Trees** located within the 88th Avenue right-of-way area shown on this CSM. Such planting and maintenance shall include without limitation and as needed planting, staking, mulching, weeding, pruning, watering, replanting, and removing of trash, debris, leaves and brush around the trees in order to prevent a nuisance condition. No driveways, signage, mail boxes, parking areas, structures or fences shall be erected within the right-of-ways, which might damage the street trees or might interfere with the Village's rights to maintain the public street improvements, unless approved by the Village. This covenant shall run with the land, shall be binding upon the Owner, its successors, successors and assigns and successors-in-title of the land, in their capacity as the Owner of Lot 1, and shall benefit and be enforceable by the Village. Such street tree planting and maintenance shall be performed regularly, without compensation, and to the satisfaction of the Village.

   To the extent that the Village performs any such street tree related maintenance

activities, the Owner shall be liable for any costs which may be incurred by the Village, which the Village may recover from such Owners as special assessments or special charges under Section 66.0627 (or successors or similar provisions) of the Wisconsin Statutes or otherwise according to law.

VILLAGE OF
PLEASANT PRAIRIE

Filed _____ 20__
Fee Paid _____ 20__
PC Meeting Date _____ 20__
VB Meeting Date _____ 20
Approved _____ 20__
Denied _____ 20__

VILLAGE OF PLEASANT PRAIRIE
CERTIFIED SURVEY MAP APPLICATION

To: Village Plan Commission & Village Board of Trustees of the Village of Pleasant Prairie:

I, (We), the undersigned owner(s)/agent do hereby petition the Village Board to amend the Village of Pleasant Prairie Zoning Map as hereinafter requested.

It is petitioned that the following described property be subdivided with a Certified Survey Map (CSM)

The property petitioned to be subdivided is located at: Southeast corner of 80th Ave. and STH 165

and is legally described as follows: See attached CSM

Tax Parcel Number(s): 92-4-122-281-0258

The property abuts or adjoins a State Trunk Highway	☒ Yes	☐ No
The property abuts or adjoins a County Trunk Highway	☐ Yes	☒ No
Municipal Sanitary Sewer is available to service said properties	☒ Yes	☐ No
Municipal Water is available to service said properties	☒ Yes	☐ No

I (We), have contacted the Community Development Department to arrange a pre-application meeting to discuss the proposed request with the Village staff to determine additional information that may be needed to consider the request.

I, (We), hereby certify that all the above statements and attachments submitted herewith are true and correct to the best of my knowledge.

PROPERTY OWNER:
Print Name: John Doheny, Doheny Enterprises, Inc.
Signature:
Address: 6950 51st St.
Kenosha, WI 53144
(City) (State) (Zip)
Phone: 262-366-6460
Fax:
Date

OWNER'S AGENT:
Print Name: Matt Carey, Pinnacle Engineering Group
Signature:
Address: 15850 W. Bluemound Road, STE 210
Brookfield, WI 53005
(City) (State) (Zip)
Phone: 262-754-8888
Fax: 262-754-8850
Date: 8/11/16

CERTIFIED SURVEY MAP NO. _____

Being a redivision of Parcel 58 of Certified Survey Map No. 2178, being a part of the Northwest 1/4 of the Northeast 1/4 of Section 28, Town 1 North, Range 22 East, in the Village of Pleasant Prairie, County of Kenosha, State of Wisconsin.

VICINITY SKETCH
SCALE 1"=2000'

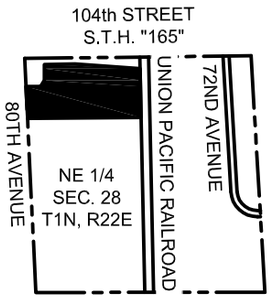

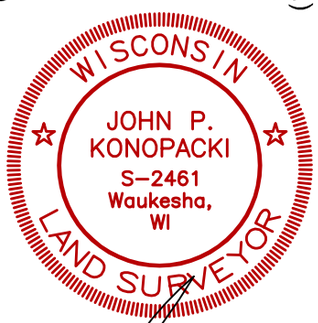

AUGUST 12, 2016

Subject Property
Zoning: M2 General Manufacturing District
Tax Key Number: 92-4-122-281-0258

Bearings refer to the Wisconsin State Plane Coordinate System, South Zone (N.A.D. 1927). The west line of the Northeast 1/4 of Section 28, Township 1 North, Range 22 East has a reference bearing of S02°45'26"E.

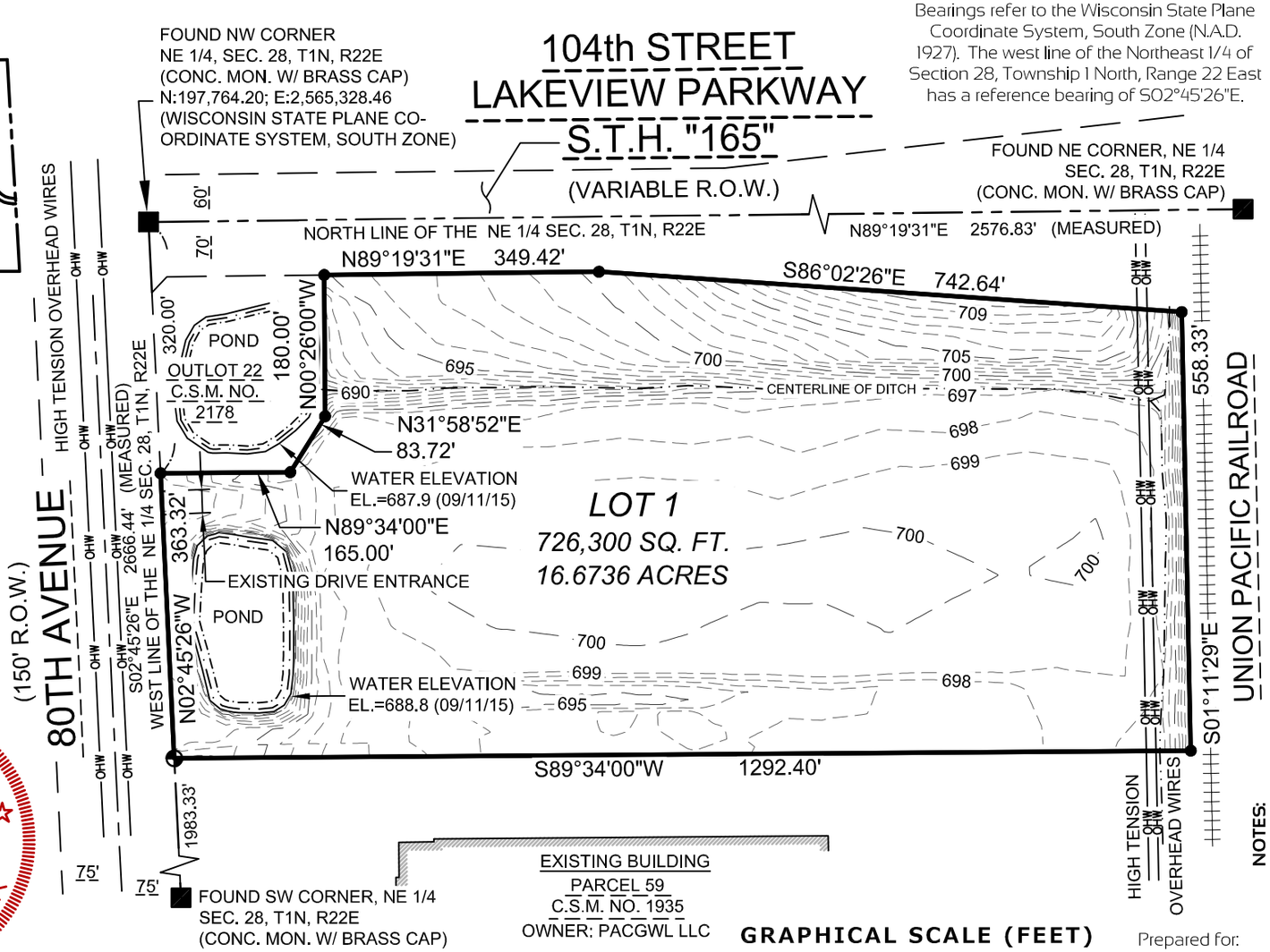

LEGEND:
- ● - Denotes Found Capped 3/4" Iron Rod.
- ○ - Denotes Set 3/4" X 18" Iron Rebar, 1.5 LBS./FT.
- ⊕ - Denotes Found Mag Nail.

GRAPHICAL SCALE (FEET)

0 — 1" = 200' — 400'

Prepared for:
Doheny Enterprises, Inc.
6950 51st Street
Kenosha, WI 53144
847-366-6460

NOTES:
- Outlot 22 of Certified Survey Map No. 2178 owned by: LAKEVIEW CORPORATE PARK OWNERS ASSOCIATION INC.
- Vertical Datum: National Geodetic Vertical Datum of 1929 (NGVD29). Contours are shown at a 1' interval based on actual ground survey of the current ground terrain. Reference Benchmark: Concrete monument with brass cap at the northwest corner of the Northeast 1/4 Section 28, Town 1 North, Range 22 East, Elevation = 690.73.
- Flood Zone Classification: The property lies with in Zone "X" of the Flood Insurance Rate Map Community Panel No. 55059C0194D with an effective date of JUNE 19, 2012.
- All measurements have been made to the nearest one-hundreth of a foot and all angular measurements have been made to the nearest one second.

Prepared By:
PINNACLE ENGINEERING GROUP
15850 BLUEMOUND ROAD I SUITE 210
BROOKFIELD, WI 53005
OFFICE: (262) 754-8888

This instrument drafted by John P. Konopacki, PLS-License No. S-2461

PEG JOB#559.00
SHEET 1 OF 7

CERTIFIED SURVEY MAP NO. _____

Being a redivision of Parcel 58 of Certified Survey Map No. 2178, being a part of the Northwest 1/4 of the Northeast 1/4 of Section 28, Town 1 North, Range 22 East, in the Village of Pleasant Prairie, County of Kenosha, State of Wisconsin.

NORTH

EXISTING EASEMENTS

NOTES:

- No Access along State Trunk Highway "165" per Certified Survey Map No. 1935 and Certified Survey Map No. 2178.
- Subject property serviced by municipal sanitary sewer and water.

WISCONSIN LAND SURVEYOR
JOHN P. KONOPACKI
S-2461
Waukesha, WI

AUGUST 12, 2016

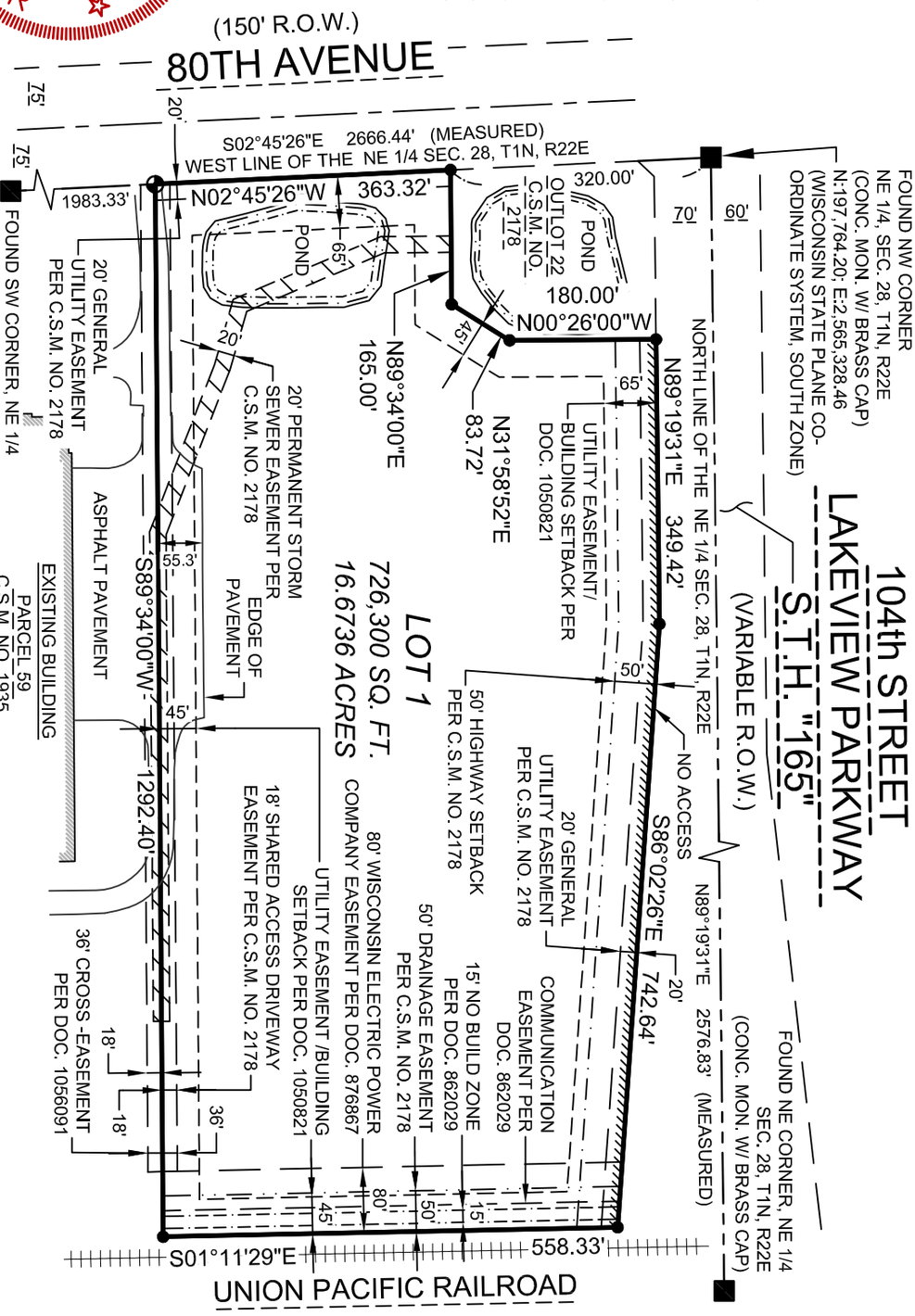

LEGEND:

- Denotes Found Capped 3/4" Iron Rod.
- Denotes Set 3/4" X 18" Iron Rebar, 1.5 LBS./FT.
- Denotes Found Mag Nail.

Prepared By:
PINNACLE ENGINEERING GROUP
15850 BLUEMOUND ROAD | SUITE 210
BROOKFIELD, WI 53005
OFFICE: (262) 754-8888

This instrument drafted by John P. Konopacki, PLS-License No. S-2461

PEG JOB#559.00

CERTIFIED SURVEY MAP NO. _____

Being a redivision of Parcel 58 of Certified Survey Map No. 2178, being a part of the Northwest 1/4 of the Northeast 1/4 of Section 28, Town 1 North, Range 22 East, in the Village of Pleasant Prairie, County of Kenosha, State of Wisconsin.

NORTH

PROPOSED EASEMENTS

WISCONSIN LAND SURVEYOR
JOHN P. KONOPACKI
S-2461
Waukesha, WI

AUGUST 12, 2016

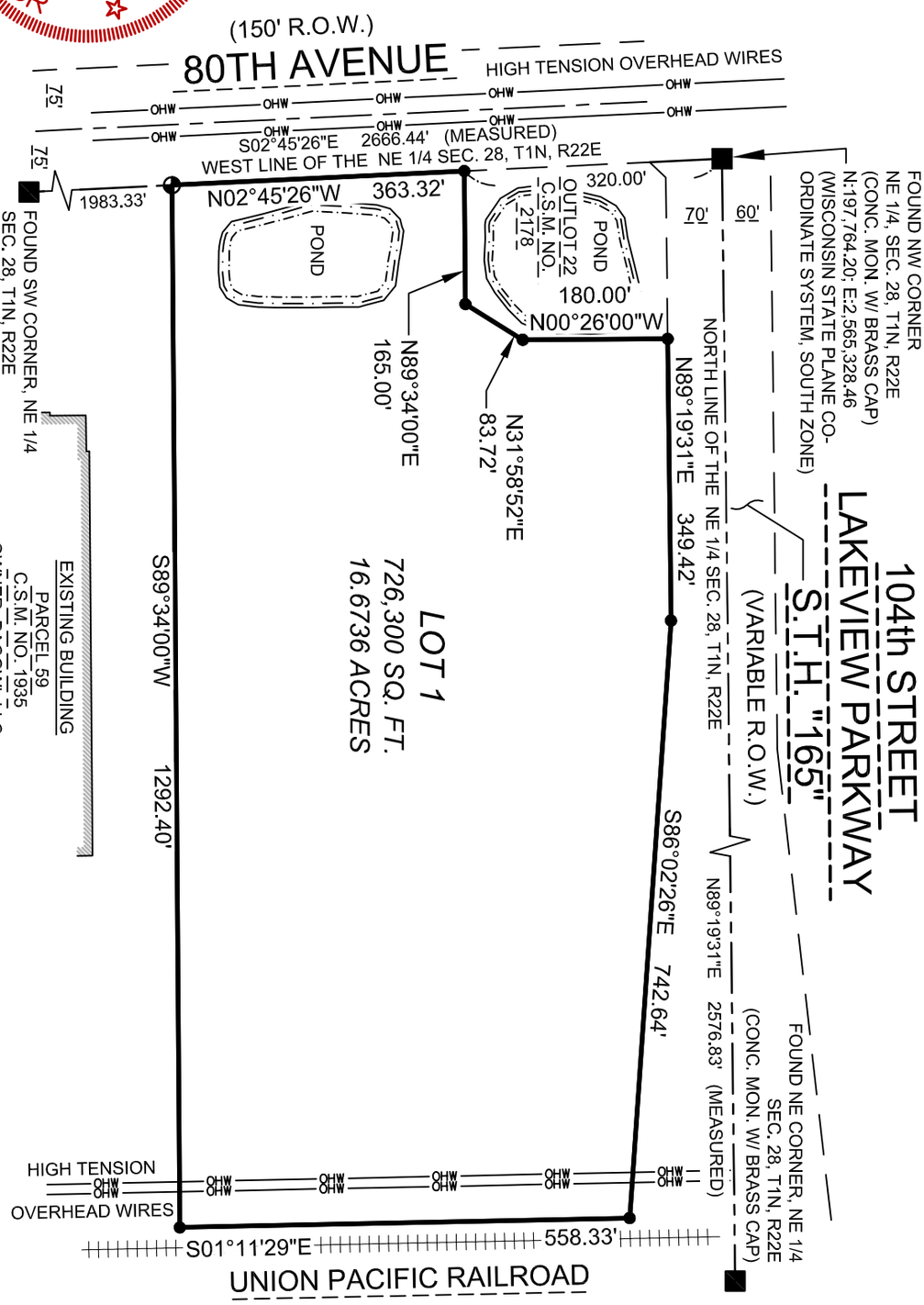

GRAPHICAL SCALE (FEET)

0 — 1" = 200' — 400'

LEGEND:

- ● - Denotes Found Capped 3/4" Iron Rod.
- ○ - Denotes Set 3/4" X 18" Iron Rebar, 1.5 LBS./FT.
- ◐ - Denotes Found Mag Nail.

Prepared By:
PINNACLE ENGINEERING GROUP
15850 BLUEMOUND ROAD | SUITE 210
BROOKFIELD, WI 53005
OFFICE: (262) 754-8888

This instrument drafted by John P. Konopacki, PLS-License No. S-2461

PEG JOB#559.00

CERTIFIED SURVEY MAP NO. _____

Being a redivision of Parcel 58 of Certified Survey Map No. 2178, being a part of the Northwest 1/4 of the Northeast 1/4 of Section 28, Town 1 North, Range 22 East, in the Village of Pleasant Prairie, County of Kenosha, State of Wisconsin.

NORTH

WETLANDS

NOTE:
- Wetlands delineated by Wetland & Waterway Consulting, LLC on July 17, 2016.

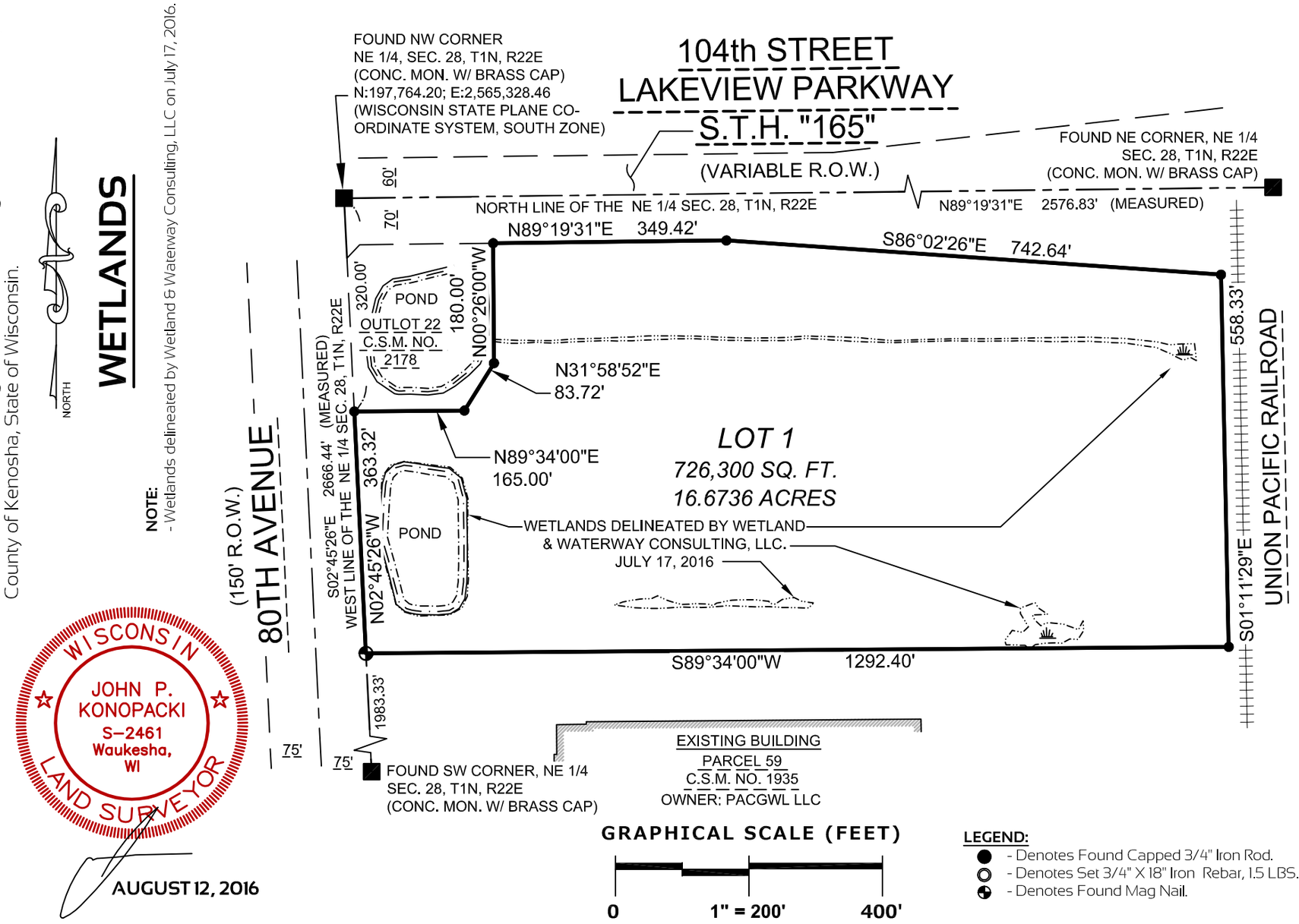

WISCONSIN
JOHN P. KONOPACKI
S-2461
Waukesha, WI
LAND SURVEYOR

AUGUST 12, 2016

LEGEND:
- ● - Denotes Found Capped 3/4" Iron Rod.
- ○ - Denotes Set 3/4" X 18" Iron Rebar, 1.5 LBS./FT.
- ◐ - Denotes Found Mag Nail.

Prepared By:
PINNACLE ENGINEERING GROUP
15850 BLUEMOUND ROAD I SUITE 210
BROOKFIELD, WI 53005
OFFICE: (262) 754-8888

This instrument drafted by John P. Konopacki, PLS-License No. S-2461

CERTIFIED SURVEY MAP NO. _____

Being a redivision of Parcel 58 of Certified Survey Map No. 2178, being a part of the Northwest 1/4 of the Northeast 1/4 of Section 28, Town 1 North, Range 22 East, in the Village of Pleasant Prairie, County of Kenosha, State of Wisconsin.

SURVEYOR'S CERTIFICATE

STATE OF WISCONSIN)
WAUKESHA COUNTY) SS

I, John P. Konopacki, Professional Land Surveyor, do hereby certify:

That I have surveyed, mapped and redivided Parcel 58 of Certified Survey Map No. 2178, recorded in the Kenosha County Register of Deeds office on March 29, 2000, as Document No. 1177146, being a redivision of Parcel 58 of Certified Survey Map No. 1935, in the Northwest 1/4 of the Northeast 1/4 of Section 28, Town 1 North, Range 22 East, Village of Pleasant Prairie, Kenosha County, Wisconsin, which is bounded and described as follows:

Commencing at the northwest corner of said Northeast 1/4 of Section 28;
Thence South 02°45'26" East along the west line of said Northeast 1/4 and the east right of way line of 80th Avenue, 320.00 feet to the Point of Beginning;
Thence North 89°34'00" East along the south line of Outlot 22 of Certified Survey Map No. 2178, 165.00 feet;
Thence North 31°58'52" East along the east line of said Outlot 22, 83.72 feet;
Thence North 00°26'00" West along said east line, 180.00 feet to the south right of way line of 104th Street - Lakeview Parkway - State Trunk Highway "165";
Thence North 89°19'31" East along said south right of way line, 349.42 feet;
Thence South 86°02'26" East along said south right of way line, 742.64 feet to the west line of the Union Pacific Railroad;
Thence South 01°11'29" East along said west line, 558.33 feet to the north line of Parcel 59 of Certified Survey Map No. 1935;
Thence South 89°34'00" West along said north line, 1292.40 feet to the aforesaid west line of the Northeast 1/4 of Section 28 and the east right of way line of 80th Avenue;
Thence North 02°45'26" West along said east right of way line, 363.32 feet to the Point of Beginning.

Containing 726,300 Square Feet (16.6736 Acres) land more or less.

That I have made such survey, land division and map by the direction of Doheny Enterprises, Inc., owner of said land.

That such plat is a correct representation of all the exterior boundaries of the land surveyed and the land division thereof made.

That I have fully complied with the requirements of Chapter 236 of the Wisconsin State Statutes and the Village of Pleasant Prairie Land Division Ordinance in surveying, mapping and dividing the same.

Date: AUGUST 12, 2016

WISCONSIN
JOHN P. KONOPACKI
S-2461
Waukesha, WI
LAND SURVEYOR

John P. Konopacki
Professional Land Surveyor S-2461

WISCONSIN DEPARTMENT OF TRANSPORTATION HIGHWAY TRANS 233 NOTES:

1. Setback Notes: There shall be no improvements or structures placed between the highway and the setback line.
2. Access Notes: As owner I hereby restrict all lots and blocks, in that no owner, possessor, user, nor licensee, nor other person shall have any right of direct vehicular ingress or egress with STH - "165", as shown on the plat; it being expressly intended that this restriction shall constitute a restriction for the benefit of the public according to §236.293, Stats., and shall be enforceable by the Department of Transportation.
3. Noise Notes: The lots of this land division may experience noise at the levels exceeding the levels in §Trans 405.04, Table I. These levels are based on federal standards. The Department of Transportation is not responsible for abating noise from existing state trunk highways or connecting highways, in the absence of any increase by the Department to the highway's through-lane capacity.

Prepared By:
PINNACLE ENGINEERING GROUP
15850 BLUEMOUND ROAD | SUITE 210
BROOKFIELD, WI 53005
OFFICE: (262) 754-8888

This instrument drafted by John P. Konopacki, PLS-License No. S-2461

CERTIFIED SURVEY MAP NO. _____

Being a redivision of Parcel 58 of Certified Survey Map No. 2178, being a part of the Northwest 1/4 of the Northeast 1/4 of Section 28, Town 1 North, Range 22 East, in the Village of Pleasant Prairie, County of Kenosha, State of Wisconsin.

The following "Dedication of Easement Provisions" and "Restrictive Covenants" were drafted by the Village of Pleasant Prairie and is shown heron as a condition of map approval. Inclusion thereof on this document is not to be considered practicing law in the State of Wisconsin by the above signed Land Surveyor, the Land Surveyor is not responsible for rights granted, perceived or otherwise stated herein.

DEDICATIONS and EASEMENTS :

1. DEDICATED WETLAND PRESERVATION AND PROTECTION, ACCESS AND MAINTENANCE EASEMENT

A nonexclusive easement coextensive with the area shown as a Wetland Preservation and Protection, Access and Maintenance Easement area within Lot 1 on this CSM is hereby dedicated, given, granted and conveyed by the Owner to the Village for wetland protection and preservation and maintenance purposes and uses and for related ingress and egress. Unless the Village exercises the rights granted to it pursuant to this easement, the Village shall have no obligation to do anything related to its rights under this easement.

RESTRICTIVE COVENANTS :

1. The Owner hereby covenants that the Lot 1 Owner shall have the obligation of protecting and preserving the Wetland Preservation and Protection, Access and Maintenance Easement areas shown on Lot 1 of this CSM. Such preservation and maintenance shall include without limitation and as needed, removing of dead, dying or decayed trees, plant material or evasive species; re-planting wetland plant life as approved by the Village and the Wisconsin Department of Natural Resources; and removing of trash and debris in order to prevent a nuisance condition. No mowing or cutting of the wetland vegetation shall be allowed without the permission of the Village. No buildings, signage or fences shall be erected within the Wetland Preservation and Protection, Access and Maintenance Easement which may cause damage to the wetland area. The covenant shall run with the land and shall be binding upon the Owner of Lot 1 of this CSM, their successors, assigns and successors-in-title of the lands, in their capacity as Owners of such land, and shall benefit and be enforceable by the Village. The Owner of Lot 1 of this CSM shall perform such maintenance as may be needed, without compensation and to the satisfaction of the Village. This covenant will not restrict or prohibit the Owner of Lot 1 on this CSM from seeking and obtaining the required permits and approvals from the appropriate federal or State agencies having jurisdiction to fill or adjust the wetland areas on Lot 1 insofar as the appropriate permits and approvals are obtained from the federal, State and Village agencies prior to commencing any wetland disturbing or fill activities.

   To the extent that the Village performs any such wetland related maintenance activities on behalf of the landowner, the Owner of Lot 1 shall be liable for any costs which may be incurred by the Village, which the Village may recover from such Owner as special assessments or special charges under Section 66.0627 (or successors and assigns or other similar provisions) of the Wisconsin Statutes or otherwise according to law. Unless the Village exercises the rights granted to it in the Dedication and Easement Provisions as referenced on this CSM, the Village shall have no obligation to do anything pursuant to its rights under the easement dedications.

CONSENT OF CORPORATE MORTGAGEE

_____ , a corporation duly organized and existing under and by virtue of the laws of the State of _____, mortgagee of the described land, does hereby consent to the surveying, dividing and mapping of the land described in the forgoing affidavit of John P. Konopacki, surveyor, and does hereby consent to the certification of owner.

IN WITNESS WHEREOF, the said _____ , has caused these presents to be signed by _____, its President, and its corporate seal to be hereunto affixed this _____ day of _____ , 2016.

_____ _____
Date President

STATE OF WISCONSIN)
_____ COUNTY) SS

Personally came before me this _____ day of _____ , 2016, _____ , to me known to be the person who executed the foregoing instrument and to me known to be such officer of said corporation and acknowledged the same.

_____
Notary Public
Name:_____
State of Wisconsin
My Commission Expires: _____

WISCONSIN
JOHN P. KONOPACKI
S-2461
Waukesha, WI
LAND SURVEYOR

AUGUST 12, 2016

Prepared By:
PINNACLE ENGINEERING GROUP
15850 BLUEMOUND ROAD | SUITE 210
BROOKFIELD, WI 53005
OFFICE: (262) 754-8888

This instrument drafted by John P. Konopacki, PLS-License No. S-2461

CERTIFIED SURVEY MAP NO. _____

Being a redivision of Parcel 58 of Certified Survey Map No. 2178, being a part of the Northwest 1/4 of the Northeast 1/4 of Section 28, Town 1 North, Range 22 East, in the Village of Pleasant Prairie, County of Kenosha, State of Wisconsin.

PLAN COMMISSION APPROVAL

Approved by the Plan Commission of the Village of Pleasant Prairie on this _____ day of _____ , 2016.

_____ Date

_____ Thomas W. Terwall, Chairman

VILLAGE BOARD APPROVAL

Approved by the Village Board of the Village of Pleasant Prairie, Wisconsin, on this _____ day of _____ , 2016.

_____ Date

_____ John P. Steinbrink, Village President

_____ Date

_____ Jane M. Romanowski, Village Clerk

OWNER'S CERTIFICATE

Doheny Enterprises, Inc., a corporation duly organized and existing under and by virtue of the laws of the State of _____, as owner, does hereby certify that said corporation caused the land described on this certified survey map to be surveyed, divided and mapped as represented on this certified survey map.

Doheny Enterprises, Inc., as owner, does further certify that this certified survey map is required by Chapter 236 of the Wisconsin State Statutes to be submitted to the following for approval or objection:

1. Village of Pleasant Prairie

IN WITNESS WHEREOF, the said Doheny Enterprises, Inc. has caused these presents to be signed by (name) _____, (title) _____, at _____, _____ County, (state) _____, on this _____ day of _____ , 2016.

In the presence of: Doheny Enterprises, Inc.

_____
Name - Title

STATE OF _____)
_____ COUNTY) SS

Personally came before me this _____ day of _____ , 2016, (name) _____, (title) _____, of the above named corporation, to me known to be the person who executed the foregoing instrument, and to me known to be such _____(title) of said corporation, and acknowledged that they executed the foregoing instrument as such officer as the deed of said corporation, by its authority.

_____
Notary Public
Name:_____
State of _____
My Commission Expires: _____

WISCONSIN
JOHN P. KONOPACKI
S-2461
Waukesha, WI
LAND SURVEYOR

JULY 13, 2016

Prepared By:
PINNACLE ENGINEERING GROUP
15850 BLUEMOUND ROAD | SUITE 210
BROOKFIELD, WI 53005
OFFICE: (262) 754-8888

This instrument drafted by John P. Konopacki, PLS-License No. S-2461

PEG JOB#559.00

VILLAGE OF PLEASANT PRAIRIE
SITE AND OPERATIONAL PLAN
AND CONDITIONAL USE PERMIT ZONING APPLICATION

USE THIS FORM FOR:
Tenants/Use changes proposing to occupy 50% or more of an existing commercial/industrial building.
To construct a new or addition to principal or accessory structure.
Use requires a Conditional Use Permit.

FOR OFFICE USE ONLY
Application Filed on _____ 20
Preliminary Determination of Completeness on: _____ 20
Revised Plans Submitted: _____ 20
☐ Public Hearing Required: Hearing Date: _____, 20__ Published on: _____ and _____, 20 Notices sent on: _____, 20
Approved by ☐ Plan Commission on _____ 20__ ☐ Zoning Administrator on _____ 20
Denied by ☐ Plan Commission on _____ 20__ ☐ Zoning Administrator on _____ 20

SECTION 1: GENERAL INFORMATION

NAME OF BUSINESS: DOHERTY ENTERPRISES, INC.

SITE ADDRESS: 7707 104TH STREET

BRIEF PROJECT DESCRIPTION: APPROXIMATELY 175,000 SF WAREHOUSE FOR DISTRIBUTION OF CONSUMER FOOD SUPPLIES. PROJECT WILL INCLUDE APPROXIMATELY 15,000 SF OF OFFICE FUNCTIONS.

PROPOSED NUMBER OF FULL TIME EMPLOYEES: 55

PROPOSED NUMBER OF PART-TIME EMPLOYEES: 140

SITE SIZE: 726,300 **sq. ft.** 16.6736 **acres**

PROPOSED BUILDING SIZE: APPROX 178,000 **sq.ft. HEIGHT:** APPROX 40'-6" **ft.**

PROPOSED ADDITION SIZE: — **sq.ft. HEIGHT:** — **ft.**

LEGAL DESCRIPTION: SEE ATTACHED

TAX PARCEL NUMBER(S): 92-4-122-281-0258

CURRENT ZONING CLASSIFICATION(S) OF THE PROPERTY: _____

1. **Is a zoning map amendment proposed with this project?** ☐ **Yes** ☒ **No**
   - **If yes,** proposed Zoning Classification(s): _____
2. **Is a zoning text amendment proposed with this project?** ☐ **Yes** ☒ **No**
   - **If yes,** provide a copy of the proposed text amendment with this application

3. **If property is zoned M-1 or M-2, indicate the Occupancy Type pursuant to the Use and Occupancy Classification specified in Chapter 3 of the 2006 International Building Code (2006 IBC). Include all that apply and associated square footage for each classification:**

☐ **Factory Group F-1 (Moderate-hazard)**	_____	sq ft
☐ **Factory Group F-2 (Low-hazard)**	_____	sq ft
☒ **Storage Group S-1 (Moderate-hazard)**	163,000	sq ft
☐ **Storage Group S-2 (Low-hazard)**	_____	sq ft
☒ **Business Group B**	15,000	sq ft
☐ **High-Hazard Group H***	_____	sq ft
☐ **Other** _____	_____	sq ft
☐ **Other** _____	_____	sq ft

If Use and Occupancy Classification is High-Hazard Group H please provide a detailed written narrative that explains the specific use, quantity of storage and handling of the high hazard materials along with appropriate MSSD sheets with this application.

PUBLIC SERVICES:

1. **Is the property serviced by Public Sanitary Sewer?** ☒ **YES** ☐ **NO**
   - **If no,** the closest public sewer is located at _____
2. **Is the property serviced by Public Water?** ☒ **YES** ☐ **NO**
   - **If no,** the closest public water is located at _____
3. **Maximum number of gallons/minute of water expected to be used per day is:** ~~Est. 120 GPM~~ Est. 30 GPM

THIS APPLICATION IS FOR A: **(check one)**

☒ **Preliminary Site and Operational Plan:** An applicant may apply for preliminary site and operational plan approval in connection with an erosion control permit application for early mass grading, or in connection with an early foundation permit, or for other good cause shown

☐ **New Site and Operational Plan**

☐ **Amendment to an existing Site and Operational Plan**

- **Date of initial site and operational plan approval:** _____
- **Date of each approved amendment:** _____

SECTION 2: EXISTING USES AND BUILDINGS ON THE SITE

Are there any existing buildings on the site? ☐ **YES** ☒ **NO**

- **If yes,** provide an attachment that explains the current uses on the property and current uses in each building and if the use(s) is proposed to continue; and the gross floor area and height of each building.
- **If no,** what is the current use of the property? VACANT LAND

SECTION 3: PHOTOGRAPHS

Standard-sized photographs (not Polaroid) showing all aspects of the site (e.g. locations of proposed improvements, bodies of navigable water, wetlands, wooded areas, etc.) and of the exterior of structures or other site improvements, together with a statement regarding each photograph, which includes the date the photograph was taken, the location from which it was taken, the direction in which the camera was pointed, and a description of what is shown in the photograph. With respect to all existing signs, the applicant shall file photographs of all existing signs and shall specify in the written statement accompanying each such photograph and show the dimensions of such sign. Digital images are acceptable.

SECTION 4: CONDITIONAL USE

1. **Does the proposed project require a Conditional Use Permit?** ☐ YES ☒ NO
   - **If no** then skip to Section 5.
   - **If yes**, then continue with this Section.
2. **Are you amending an existing Conditional Use Permit?** ☐ YES ☐ NO
   - **If yes**, provide a copy of the Conditional Use Grant Document you are proposing to amend.
   - **If no**, continue with this Section.
3. If you answered **YES** to either question 1 or 2 above then this application shall include information as to how the proposed project will not impair an adequate supply of light and air to adjacent properties; increase danger of fire; cause traffic congestion or traffic circulation problems; create storm water flooding or drainage; create obnoxious odors, problems or otherwise endanger the public health, safety or welfare; will not hinder, harm or distract the provision of public services; and that the proposed project is not inherently inconsistent with either the district in which it is located or adjoining districts or neighborhoods as required pursuant to the Village Zoning Ordinance.

SECTION 5: NON-CONFORMING USE

1. **Is any use on the site a nonconforming use?** ☐ YES ☒ NO
   - **If no**, then skip to Section 7.
   - **If yes**, then continue with this section.
2. If you answered **YES** to question 1 above, prima facie proof of each element of legal nonconforming use status shall be submitted to the Village with this application (i.e. that the nonconforming use was legal in its inception, that the use was active and actual and not merely casual, occasional, incidental or accessory when it became nonconforming, that the use has been continuous with no gap of 12 or more consecutive months since it became nonconforming, that no building or structure housing the nonconforming use has been structurally repaired or altered to the extent of fifty (50) percent or more of its assessed value since the use became nonconforming, and that the use has not been changed in nature or physically extended or expanded since becoming nonconforming).

SECTION 6: PERFORMANCE STANDARDS

Pursuant to the Village Zoning Ordinance, any application for a permit under this ordinance or any use subject to the regulations and standards set forth in the Village Zoning Ordinance shall be accompanied by a sworn statement by the owner of the subject property that said property and use will be operated in accordance with the performance standards set forth in Section 420-38 of the Village Ordinance. Continued compliance with the regulations and standards is required. Violations of such standards shall remedied as required by the Village Zoning Ordinance.

No land or building in any district shall be operated in such a manner so as to create any dangerous, injurious, noxious or otherwise objectionable fire, explosive or other hazard; noise or vibration, smoke, dust, dirt or other form of air pollution; water pollution; electrical, radioactive or other disturbances; glare; or other substance, condition or element (referred to herein as "dangerous or objectionable elements") in such amount as to adversely affect the surrounding area or premises; provided that any use permitted by this ordinance may be undertaken and maintained if it conforms to the regulations of this subsection limiting dangerous and objectionable elements at the specified point or points of the determination of their existence.

The Village may require additional information be submitted to ensure that the Village Performance Standards are being met.

SECTION 7: PLAN COMPONENTS

The application shall include a list of all documents, materials or information that are attached to and a part of the application form. Submit eight (8) full-sized and one (1) set reduced to 11" x 17" of all plans and other attachments shall be included as part of this application, except if a component has been waived or deferred in writing by the Village Zoning Administrator. **For specific details related to each of the required information and plans see the attachment entitled "*Plan Components and Related Standards*" in Section 420-57 of the Village Zoning Ordinance.**

- ☐ Application—Applicant, Site, Use, Project and Plan Information
- ☐ Application fee
- ☐ Operational plan
- ☐ Title sheet
- ☐ Survey
- ☐ Site plan
- ☐ Grading and drainage plan
- ☐ Building and fire protection plans
- ☐ Lighting plan
- ☐ Landscape and open space plan
- ☐ Signage plan
- ☐ Industrial/commercial waste survey
- ☐ Performance standards compliance
- ☐ Additional requirements, as determined by the Village Zoning Administrator, other appropriate Village staff members, or the Village Plan Commission, as appropriate.

Two or more plans may be combined, provided that all of the information submitted on the combined plan is clearly legible, but in no case shall the combined plans fail to show any of the information required for each individual plan as described below, unless such information is waived or deferred pursuant to the Zoning Ordinance.

SECTION 8: SIGNATURES

I,(We), hereby certify that all the above statements and all attachments submitted herewith are true and correct to the best of my knowledge. In addition I, (we) understand the requirements and procedures for Site and Operational Plan/Conditional Use Permit approval.

PROPERTY OWNER:

Name: Edward Harrington
(Please Print)

Signature:

Address: 1808 Swift Drive 60523

Oak Brook IL
(City) (State) (Zip)

Phone: 630-586-8167

Fax:

E-mail: eharrington@centerpoint.com

Date 7/15/2016

APPLICANT:

Name: JOHN T. DOHENY
(Please Print)

Signature:

Address: 6950 81st St.

KENOSHA WI 53144
(City) (State) (Zip)

Phone: 262 605 3010

Fax: 262 605 1079

E-mail: JOHN@DOHENY.com

Date: 7/13/16

Is the applicant the owner of the property? ☐ YES ☒ NO

If no, then either proof of the applicant's legal interest in the subject real property (e.g. accepted offer to purchase, lease, etc., which may be appropriately redacted to preserve confidential information) or written authorization signed by the owner for the applicant to act as the owner's agent in connection with the application shall be included with the application.

DEVELOPER (if Applicable)

Name:
(Please Print)

Signature:

Address:

(City) (State) (Zip)

Phone:

Fax:

E-mail:

Date

USER OR OCCUPANT OF SITE:

Name:
(Please Print)

Signature:

Address:

(City) (State) (Zip)

Phone:

Fax:

E-mail:

Date:

Lot 40 – Doheny Enterprises

Legal Description:

As described in Chicago Title Insurance Company commitment number KE-2619 with an effective date of October 15, 2015 and issued October 26, 2015

Parcel A:

Parcel 58 of Certified Survey Map No/ 2178, recorded in the Kenosha County Register of Deeds office on March 29, 2000, as Document No. 1177146, being a redivision of Parcel 58 of Certified Survey Map No. 1935, in the Northwest ¼ of the Northeast ¼ of Section 28, Town 1 North, Range 22 East, in the Village of Pleasant Prairie, County of Kenosha, State of Wisconsin.

Operational plan.

(1) Operational plan requirements. The applicant shall prepare and file as part of the application for site and operational plan approval an operational plan which shall include at least the following information or materials:

(a) A detailed narrative description of the operations, processes and functions of the existing and proposed uses to be conducted in or on the real property constituting the site, together with any diagrams, maps, charts or other visual aids that are helpful in understanding the operations and any potential adverse impacts on neighboring properties.

Doheny's is a leader in the swimming pool supply industry with 10 distribution centers nationwide. Doheny's has been in Kenosha for 20 years and is currently in 3 warehouses there with plans to consolidate those locations into a single distribution center in Pleasant Prairie. The company sells swimming pool supplies to the consumer and commercial markets via catalogs, websites, outbound telemarketing and a local retail pool store. The primary function of the proposed distribution center is to house our contact center, warehousing functions of pick, pack and shipping via FedEx, UPS, and common carrier. The company will not manufacture or assembly any items at this facility and it will act solely as storage of dry finished goods. The company is seasonal with peak employment and inbound outbound shipping traffic during the warmer months of the year.

(b) A detailed description of the proposed project or activity giving rise to the need for site and operational plan approval and a detailed explanation of how such project or activity relates to the site and to the existing or proposed operations to be conducted in or on the real property constituting the site.

The proposed project is to construct a new 175,000 36' clear distribution center on the vacant lot lactated at 7707 104th St. Construction will start in the fall of 2016 with a completion in 2017.

(c) Gross floor area of the existing building(s) and/or proposed addition.

175,000 sq/ft

(d) Anticipated hours of operation, hours open to the public, and hours of deliveries or shipments.

8:00am until 5pm – peak hours 6:00am until 10:00pm

(e) Anticipated startup and total number of full- and part-time employees.

Doheny's employs 55 fulltime employees and 140 seasonal.

(f) Anticipated number of shifts and the anticipated number of employees per shift.

Doheny's contact center runs M-F 8am-6pm for non-seasonal months (Oct-Feb) and M-F 6am-10pm and S-S 8am-5pm for its peak season (March-Sept)

Doheny's warehouse runs M-F 8am-6pm for non-seasonal months (Oct-Feb) and M-F 6am-8pm and S-S 8am-1pm for its peak season (March-Sept)

(g) Anticipated maximum number of employees on site at any time of the day.

Doheny's would anticipate 140 employees on its peak day

(h) Number of anticipated students, participants or persons to be gathered in places of assembly, if applicable.

n/a

(i) Number of parking spaces required per this chapter and the method used to calculate such number.

160 parking spaces calculated based on prior need (note: not all employees of Doheny's require a parking spot)

(j) Number of existing and proposed on-site parking spaces to be provided (conventional spaces and handicapped accessible spaces to be stated separately).

208 parking spaces, 1 per 1,000 sq/ft of space

(k) Anticipated daily average and maximum potential number of automobile trips to and from the site (excluding trucks).

Peak 150 cars

(l) Anticipated daily average and maximum potential number of truck trips to and from the site.

Peak 30 trucks

(m) Types and quantities of goods and materials to be made, used or stored on site.

The products stored at this facility will be swimming pool supplies. Mainly swimming pool chemicals, pool equipment, and accessories.

(n) Types of equipment or machinery to be used on site.

Fork Lifts are the only equipment used and no machinery.

(o) Types and quantities of solid or liquid waste materials which will require disposal.

n/a

(p) Method of handling, storing and disposing of solid or liquid waste materials.

n/a

(q) Methods of providing site and building security other than the Village Police Department.

Typical distribution offsite monitoring security system with cameras

(r) Description of the methods to be used to maintain all buildings, structures, site improvements and sites in a safe, structurally sound, neat, well cared for and attractive condition.

As an owner occupied site the care and attention to detail will always be maintained at the highest levels.

(s) Description of potential adverse impacts to neighboring properties or public facilities and measures to be taken to eliminate or minimize such adverse impacts.

We do not anticipate any adverse impact outside of typical construction. We plan for site grading, utilities, footings, this fall and wall and final construction starting in the spring.

(t) A list of all local, Kenosha County (highway access), State and federal permits or approvals required for the project or activity giving rise to the need for site and operational plan approval. Provide copies of such permits and approvals that have been obtained.

Will submit

(2) Operational plan standards. In addition to any other applicable requirements or standards specified in this chapter, the following requirements or standards shall apply to the operational plan:

(a) No use shall be conducted in such a way as to constitute a public or private nuisance.

(b) No use shall be conducted in such a way as to violate any of the performance standards set out in § 420-38 of this chapter.

(c) (reserved)

(d) No owner, occupant or user of real property shall conduct a use so intensively that there is inadequate provision of on-site parking spaces and/or loading spaces to accommodate the needs of such use.

(e) All buildings, structures, site improvements and sites shall be maintained in a safe, structurally sound, neat, well cared for and attractive condition.

(f) Within a building, any provision of live entertainment in connection with a business or club use involving the selling or service of alcoholic beverages shall comply with the following restrictions:

[1] Live entertainment shall be provided only on a raised platform that is not less than 23 inches higher than the elevation of the surrounding floor surfaces where customers, members or their guests are sitting, standing or dancing;

[2] Customers, members or their guests shall at all times be separated from the raised platform on which live entertainment is being provided by a distance of not less than four feet and a physical barrier to mark and enforce such separation distance; and

[3] There shall be no touching of any kind between entertainers and customers, members or their guests.

(g) No proposed new or expanded use shall be permitted to create or significantly exacerbate unsafe traffic conditions on any street or highway in the Village.

(h) Indoor pyrotechnic displays are prohibited.

Return to: Katrina Karow
Kenosha Water Utility
4401 Green Bay Road
Kenosha, WI 53144
Email: kkarow@kenosha.org

Date Sent: 7-18-16

Date Due: _____

VILLAGE OF PLEASANT PRAIRIE
INDUSTRIAL WASTE SURVEY

To be submitted to the

Kenosha Water Utility

General Information

1. Facility Name: DOHENY'S
2. Mailing Address: 6950 57ST ST.
3. City, State, Zip Code: KENOSHA WI 53144
4. Site Address: 7707 104th ST LOT 40
5. Standard Industrial Classification Code (SIC): _____
6. Name, Title and Telephone Number of the Authorized Representative and the Company Contact Person Responsible for Environmental Compliance.

Authorized Representative	*Company Contact*
Name: JOHN DOHENY	Name: JOHN DOHENY
Title: PRESIDENT	Title: PRESIDENT
Phone #: 262 605 3010	Phone #: 262 605 3010

The authorized representative must be a president, secretary, treasurer, or vice-president of the corporation in charge of a principle business function, or general partner or proprietor, or an individual designated by the aforementioned corporate official. The designated individual must meet the following criteria: (1) the person must be responsible for the overall operation of the facilities from which discharges originate, (2) the person is authorized in writing, and (3) the written authorization is submitted to the POTW.

7. List All Environmental Control Permits Held by or for the Facility.

N/A

Operational Characteristics

1. Existing Number of Employees: Full Time 55 Part Time 140
2. Operational Schedule: Days/Wk M-F Hours/Day 8:00-5:00 # Shifts 1
3. Describe the nature of the business conducted at this facility (if more than one type ,of business or manufacturing takes place, list all activities): DISTRIBUTION OF DRY GOODS TO SUNNY PAIR MARKET
4. List principal raw materials used: N/A
5. List products produced and the average rate of production: N/A
6. List types of wastes created during production and any by-products produced: N/A
7. Estimate the quantity of water to be used by the facility during a six month period. Record the gallons of water anticipated by this facility. 93 100 CU USED gallons.

   Indicate the source of the facility's water: Kenosha _____ Pleasant Prairie X

   Meter number or address assigned to water meter(s). _____
8. Type of discharges: Continuous X Batch_____

   If batch was indicated, give the average frequency and approximate volume of any batch discharges: _____
9. Describe the uses of water at this facility: BATHROOMS, KITCHEN

Wastewater Information

1. A process wastewater IS any wastewater discharged other than for sanitary, non-contact cooling or boiler blow-down purposes. List activities which generate a process wastewater and the time and duration of each discharge.

Wastewater Producing Process	Time and Duration of Discharges
N/A	

2. For each process wastewater stream list all the materials and pollutants which to believe may be present in the discharge.

N/A

3. Contact cooling water is cooling water that during the process comes into contact with process material, thereby becoming contaminated. Non-contact cooling water does not come into contact with process materials. Does this facility utilize cooling water?

4. Water volume used and discharged to sanitary sewer. A review of previous water usage bills may be helpful in assigning values to the following flows. If sanitary flow is not metered, provide an estimate based on 20 gallons per day fir each employee (i.e. water balance).

	Gallons per Day Consumed	Gallons per Day Discharges	Type of Wastewater Discharge (Continuous, Batch, None)
Sanitary Usage	1,100		NOTE! WE USED 93 100 CU FT OVER THE LAST 6 months
Process Wastewater Usage		N/A	
Cooling Water Usage		N/A	
Other Usage	N/A		
Total Volume			

5. Describe all locations where wastewaters enter the collection system

6. Is there a sampling manhole on site? No X Yes

If yes, describe the locations:

7. Are sanitary and process wastewaters separated? No N/A Yes

8. Is boiler blowdown water discharged to the sanitary sewer? No X Yes

9. Does your facility haul any process wastewater? No X Yes

Compliance Information

1. Is there any usage of toxic compounds at the facility? No Y Yes

If yes, list and use check list on last page.

2. Are there any floor drains in the manufacturing or chemical storage area? No N/A Yes

3. Is there a Spill Prevention Control and Countermeasure Plan in effect for this facility?

No X Yes If yes, describe procedure:

5. Is any form of waste water pretreatment practiced at this facility? No X Yes _____

If yes, describe: _____

6. List any specific pretreatment standards that apply to this facility: N/A

7. If pretreatment standards are not being met on a consistent basis, describe what additional and maintenance or pretreatment must be performed to achieve compliance.

N/A

8. State the estimated timetable (compliance schedule) for the implementation of additional operations and maintenance or for the commencement and completion of major events leading to the construction and operation of the pretreatment facilities required to achieve compliance.

FALL 2017

Submissions

Include a schematic (print) of the facility that shows the water intake points(s), existing sanitary sewer, discharge points (connection(s) to sanitary collection system), and direction of wastewater flows at the facility. Provide a diagram of water flow through any processes that use water for any purpose.

Signatory Requirement

I certify under penalty of law that this document and all attachments were prepared under my direction or supervision in accordance with a system designed to assure that qualified personnel properly gather and evaluate this information submitted. Based on my inquiry of the person or persons directly responsible for gathering the information, the information submitted is to the best of my knowledge and belief true, accurate and complete. I am aware that there are significant penalties for submitting false information, including the possibility of fine and imprisonment.

JOHN DOHERTY	
Print Name: Authorized Representative	Signature: Authorized Representative
PRESIDENT	7/13/16
Title	Date

VPPCOMDEV-0009-F (REV. 9/04)

Appendix
Toxic Pollutants Listed in 40CFP 307(a)

Known Absent	Suspected Present	Known Present	Polluntant
✓			1 Acenaphthene
✓			2 Acrolein
✓			3 Acrylonitrile
✓			4 Aldrin/Dieldrin
✓			5 Antimony and compounds
✓			6 Arsenic and compounds
✓			7 Asbestos
✓			8 Benzene
✓			9 Benzidine
✓			10 Beryllium and compounds
✓			11 Cadmium and compounds
✓			12 Carbon tetrachloride
✓			13 Chlordane
✓			14 Chlorinated benzenes
✓			15 Chlorinated ethanes
✓			16 Chlorinalkyl ethers
✓			17 Chlorinated naphthalene
✓			18 Chlorinated phenols
✓			19 Chlorofoffi1
✓			20 2-chlorophenol
✓			21 Chromium and compounds
✓			22 Copper and compounds
✓			23 Cyanides
✓			24 DDT and metabolites
✓			25 Dichlorobenzenes
✓			26 Dichlorobenzidine
✓			27 Dichloroethylenes
✓			28 2,4-dichlorophenol
✓			29 Dichloropropane & Dichloropropene
✓			30 2,4-dimethylphenol
✓			31 Dinitrotoluene
✓			32 Diphenylhydrazine
✓			33 Endosulfan and metabolites

Known Absent	Suspected Present	Known Present	Polluntant
✓			34 Endrin and metabolites
✓			35 Ethylbenzene
✓			36 Fluoranthene
✓			37 Haloethers
✓			38 Halomethanes
✓			39 Heptachlor and metabolites
✓			40 Hexachlorobutadiene
✓			41 Hexachlorocyclopentadiene
✓			42 Hexachlorocyclohexane
✓			43 Isophrone
✓			44 Lead and compounds
✓			45 Mercury and compounds
✓			46 Naphthalene
✓			47 Nickel and compounds
✓			48 Nitrobenzene
✓			49 Nitrophenols
✓			50 Nitrosamines
✓			51 Pentachlorophenol
✓			52 Phenol
✓			53 Phthalate esters
✓			54 Polychlorinated biphenyls (PCBs)
✓			55 Polynuclear aromatic hydrocarbon
✓			56 Selenium and compounds'
✓			57 Silver and compounds
✓			58 2,3,7,8-Tetrachlorodibenzo- p-dioxin (TCDD)
✓			59 Tetrachloroethylene
✓			60 Thallium and compounds
✓			61 Toluene
✓			62 Toxaphene
✓			63 Trichloroethylene
✓			64 Vinyl chloride
✓			65 Zinc and compounds

7/15/2016

Village of Pleasant Prairie
9915 39th Avenue
Pleasant Prairie, WI 53158

Re: Lakeview Lot 40- Doheny's Preliminary Stormwater Plan

Pinnacle Engineering Group (PEG) would like to officially request consideration by the Village of Pleasant Prairie Engineering staff for this Preliminary Stormwater Plan to support the civil engineering documents for the Preliminary Site and Operational Plan Review.

The intent is to achieve stormwater management standards for the proposed industrial development located near the southeast corner of the intersection of STH 165 and 80th Ave. The proposed site plan includes a 175,000 SF industrial building with adequate employee parking and truck court with docks. In total, the disturbed area for the development encompasses approximately 15 acres.

The existing site is mostly vacant, with two existing detention ponds located on the west side of the site, near 80th Ave. Existing drainage patterns include a high point along the center of the site with an existing ditch that conveys stormwater from the north half of the site to the existing detention pond located in the northwest corner of the site. The south half of the site is conveyed via existing storm sewer piping to the pond located at the southwest corner of the site. This portion of the site is also a shared truck court and storm sewer main with the adjacent development to the south.

PEG was able to obtain the existing stormwater management plan for the existing Hospira facility to the adjacent property to the south, which was prepared in 1995 by HNTB. This report includes the design for the two existing ponds located on the site. The report and the as-built plans confirm that the roof drainage from the Hospira building goes to the south to a separate stormwater pond and does not drain to the two ponds located within the proposed Lot 40 development. Only the existing north Hospira truck court drainage is conveyed to the south pond within Lot 40.

When reviewing the existing topographic survey and looking at the ponds, it was discovered that the ponds were not built per plan. The outlets of each pond, as well as the pipe between the ponds are all at different elevations/slopes than what is listed in the existing stormwater report and as-built plans. The size (and therefore storage volume) of the ponds was also smaller than what was proposed in the plans. Due to this, the Village has asked PEG to provide an updated stormwater analysis based on the proposed development and the existing conditions of the pond. The existing stormwater report listed the following release rates:

Existing Proposed Discharge Rates:
10-year= **5.0 cfs**
100-year= **10.0 cfs**

As requested by the Village, the release rates from the ponds shall not exceed these flows . The ponds currently discharge into the 80th Ave storm sewer along the west side of the north pond via an 18" culvert. In order to achieve these release rates, PEG modeled the proposed development in HydroCAD and determined that modifications to each pond outlet were necessary to keep the same pond configuration and storage volume. This includes adding a multi-stage

outlet structure to the north pond outlet and a restrictor plate to the south pond outlet. Specific details for these modifications can be found in the preliminary civil plans. These modifications helped achieve the following release rates:

Proposed Discharge Rates (From HydroCAD model):
10-year: **4.74 cfs**
100-year: **7.84 cfs**

Upon conceptual approval of the Civil Plans, Pinnacle Engineering Group will move forward with a full Stormwater Management Plan. This document would then be supplied to the City to accompany future plan submittals.

If you should have any comments or questions, feel free to call us at 262-754-8888. We would be happy to discuss any items described within this document.

Sincerely,

PINNACLE ENGINEERING GROUP

Matt Carey, P.E., LEED AP

Project Manager

Enclosures:

-Existing 1995 Drainage Report, Pond Summary Map
-Proposed Hydrology Exhibit
-Proposed Hydrocad Model

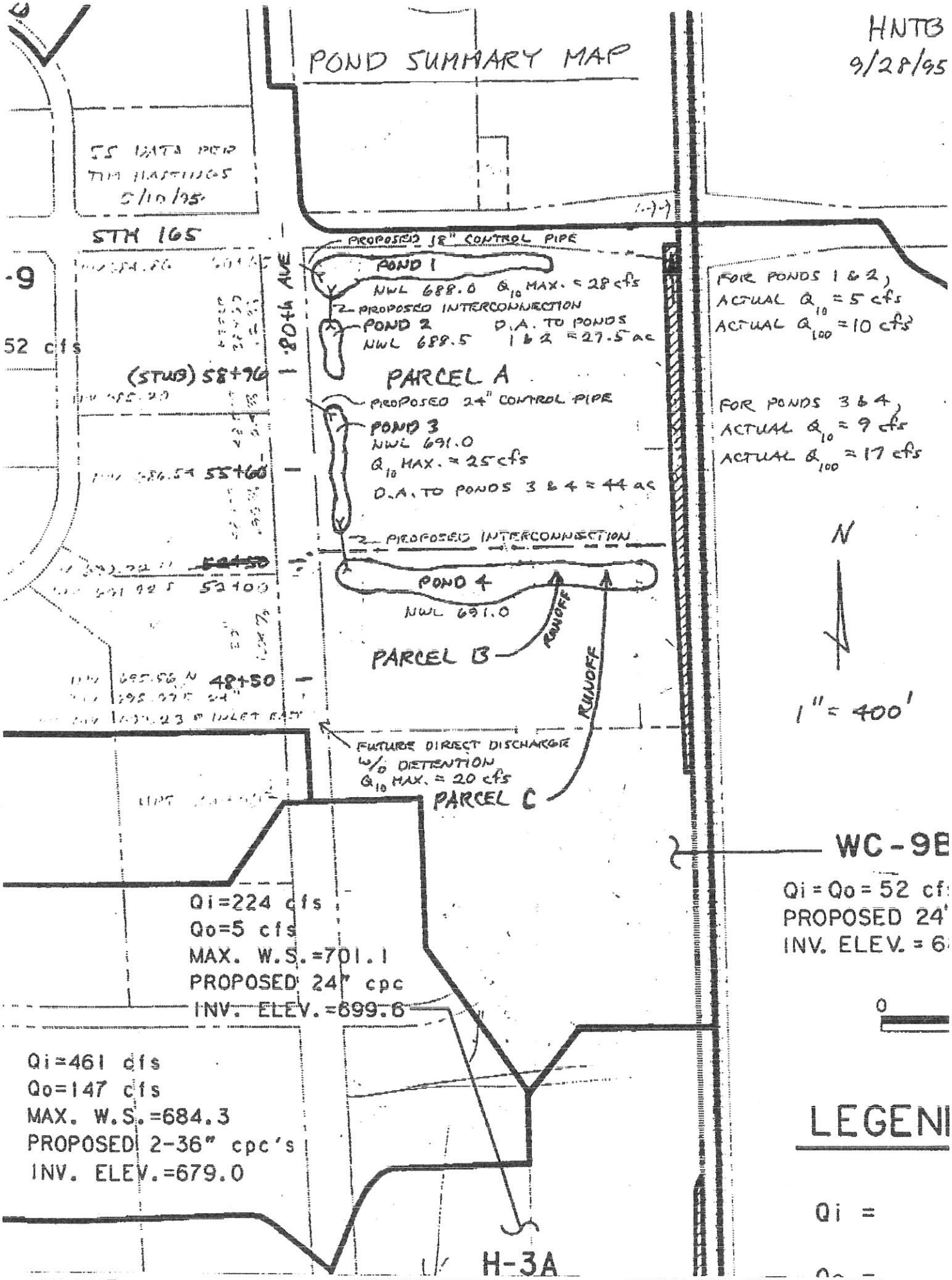
POND SUMMARY MAP
HNTB
9/28/95
STH 165
80th AVE
PROPOSED 18" CONTROL PIPE
POND 1
NWL 688.0 Q10 MAX. = 28 cfs
PROPOSED INTERCONNECTION
POND 2
NWL 688.5
D.A. TO PONDS 1 & 2 = 27.5 ac
PARCEL A
PROPOSED 24" CONTROL PIPE
POND 3
NWL 691.0
Q10 MAX. = 25 cfs
D.A. TO PONDS 3 & 4 = 44 ac
PROPOSED INTERCONNECTION
POND 4
NWL 691.0
PARCEL B
RUNOFF
RUNOFF
FUTURE DIRECT DISCHARGE W/O DETENTION
Q10 MAX. = 20 cfs
PARCEL C
FOR PONDS 1 & 2,
ACTUAL Q10 = 5 cfs
ACTUAL Q100 = 10 cfs
FOR PONDS 3 & 4,
ACTUAL Q10 = 9 cfs
ACTUAL Q100 = 17 cfs
N
1" = 400'
(STUB) 58+76
55+60
48+50
WC-9B
Qi = Qo = 52 cfs
PROPOSED 24"
INV. ELEV. = 6
Qi=224 cfs
Qo=5 cfs
MAX. W.S.=701.1
PROPOSED 24" cpc
INV. ELEV.=699.6
Qi=461 cfs
Qo=147 cfs
MAX. W.S.=684.3
PROPOSED 2-36" cpc's
INV. ELEV.=679.0
LEGEND
Qi =
H-3A

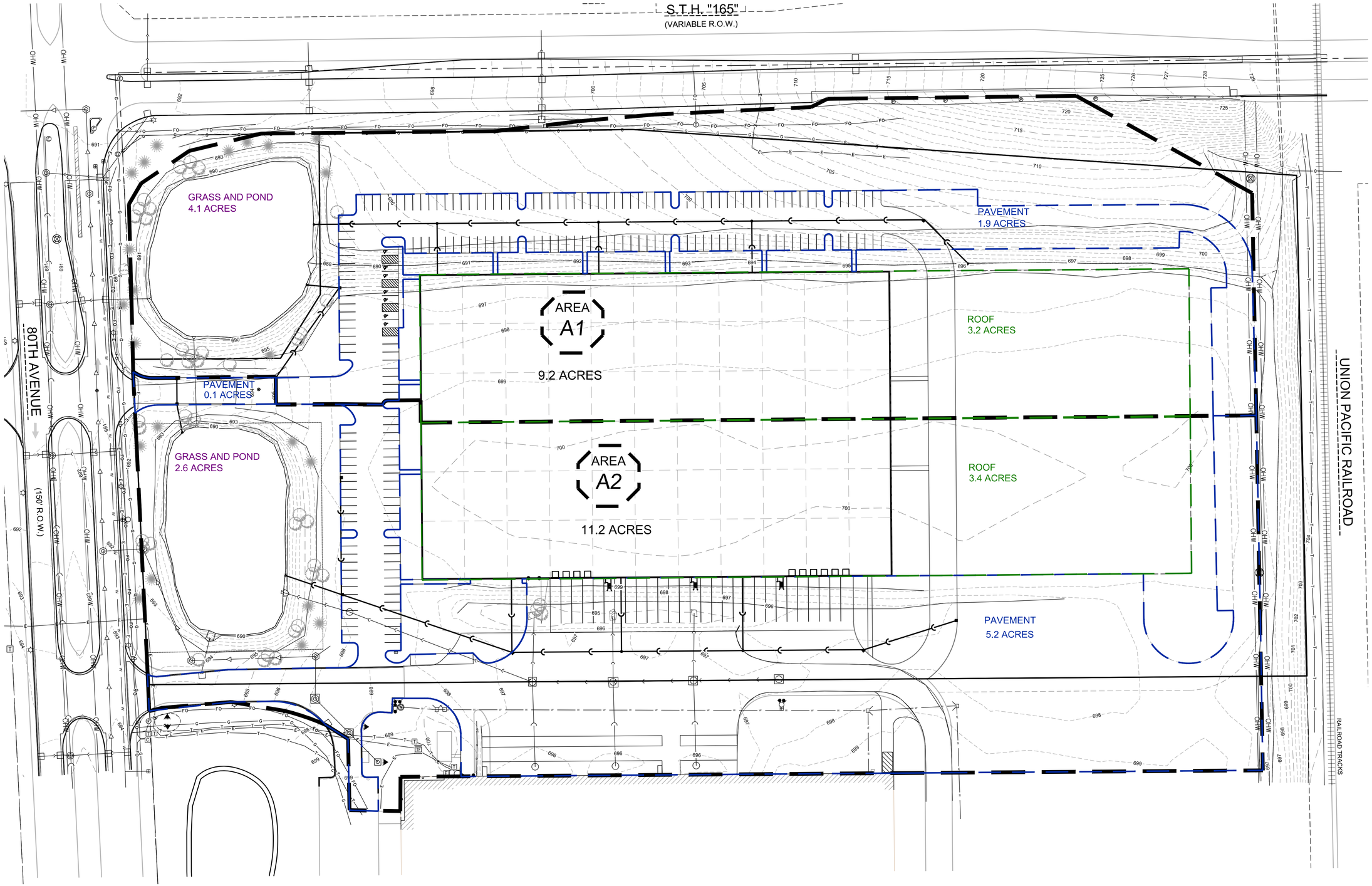

LAKEVIEW LOT 40 - PROPOSED DRAINAGE MAP

07/08/2016

PINNACLE ENGINEERING GROUP

15850 W. BLUEMOUND ROAD | SUITE 210 | BROOKFIELD, WI 53005 | WWW.PINNACLE-ENGR.COM |

PLAN | DESIGN | DELIVER

PEGJOB# 559.00A

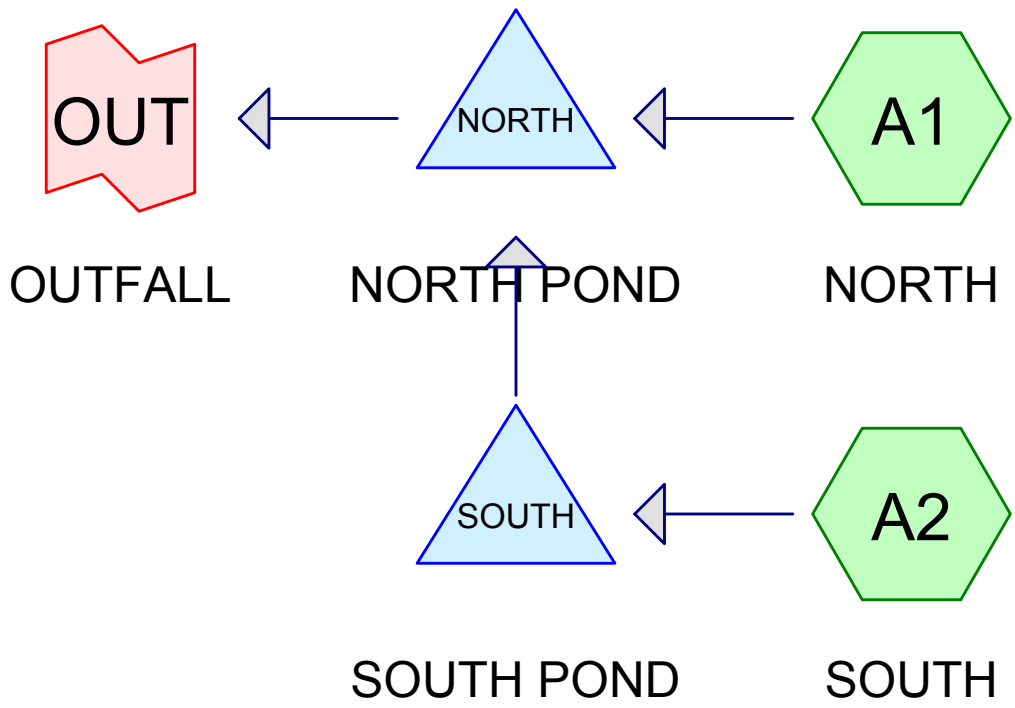

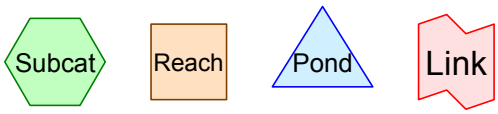

Routing Diagram for PROPOSED
Prepared by Hewlett-Packard Company, Printed 7/14/2016
HydroCAD® 10.00-14 s/n 07894 © 2015 HydroCAD Software Solutions LLC

Summary for Subcatchment A1: NORTH

Runoff = 29.57 cfs @ 11.89 hrs, Volume= 1.230 af, Depth= 1.60"

Runoff by SCS TR-20 method, UH=SCS, Weighted-CN, Time Span= 0.00-48.00 hrs, dt= 0.05 hrs
Type II 24-hr 2-YEAR Rainfall=2.67"

Area (ac)	CN	Description
3.200	98	Roofs, HSG C
1.900	98	Paved parking, HSG C
0.700	98	Water Surface, HSG C
3.400	74	>75% Grass cover, Good, HSG C
9.200	89	Weighted Average
3.400		36.96% Pervious Area
5.800		63.04% Impervious Area

Subcatchment A1: NORTH

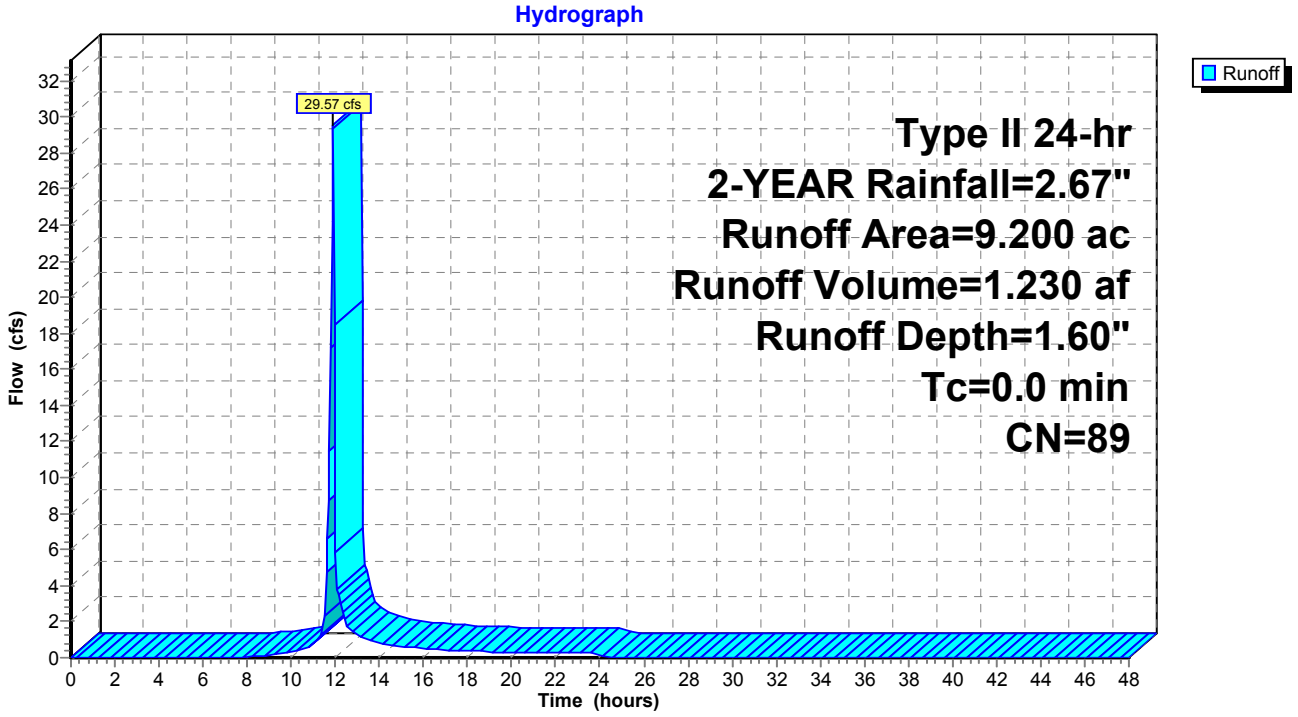

Summary for Subcatchment A2: SOUTH

Runoff = 32.89 cfs @ 12.01 hrs, Volume= 1.897 af, Depth= 2.03"

Runoff by SCS TR-20 method, UH=SCS, Weighted-CN, Time Span= 0.00-48.00 hrs, dt= 0.05 hrs
Type II 24-hr 2-YEAR Rainfall=2.67"

Area (ac)	CN	Description
5.200	98	Paved parking, HSG C
0.600	98	Water Surface, HSG C
2.000	74	>75% Grass cover, Good, HSG C
3.400	98	Roofs, HSG C
11.200	94	Weighted Average
2.000		17.86% Pervious Area
9.200		82.14% Impervious Area

Tc (min)	Length (feet)	Slope (ft/ft)	Velocity (ft/sec)	Capacity (cfs)	Description
10.0					**Direct Entry,**

Subcatchment A2: SOUTH

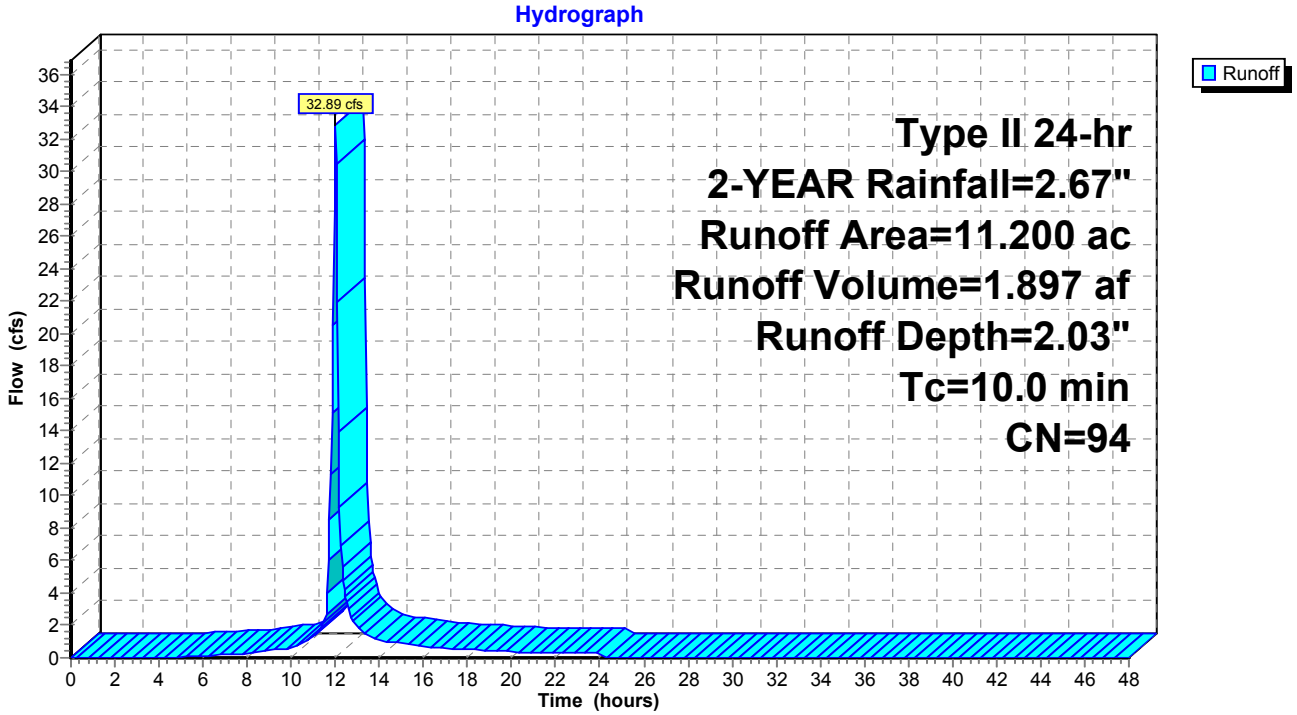

Summary for Pond NORTH: NORTH POND

Inflow Area = 20.400 ac, 73.53% Impervious, Inflow Depth > 1.82" for 2-YEAR event
Inflow = 31.71 cfs @ 11.89 hrs, Volume= 3.088 af
Outflow = 3.65 cfs @ 13.53 hrs, Volume= 3.022 af, Atten= 88%, Lag= 98.0 min
Primary = 3.65 cfs @ 13.53 hrs, Volume= 3.022 af

Routing by Dyn-Stor-Ind method, Time Span= 0.00-48.00 hrs, dt= 0.05 hrs
Peak Elev= 689.33' @ 13.53 hrs Surf.Area= 31,430 sf Storage= 49,345 cf

Plug-Flow detention time= 237.0 min calculated for 3.022 af (98% of inflow)
Center-of-Mass det. time= 210.8 min (1,132.5 - 921.7)

Volume	Invert	Avail.Storage	Storage Description
#1	687.71'	182,027 cf	**Custom Stage Data (Prismatic)** Listed below (Recalc)

Elevation (feet)	Surf.Area (sq-ft)	Inc.Store (cubic-feet)	Cum.Store (cubic-feet)
687.71	29,584	0	0
688.00	30,000	8,640	8,640
689.00	30,866	30,433	39,073
690.00	32,575	31,721	70,793
691.00	35,703	34,139	104,932
692.00	38,522	37,113	142,045
693.00	41,443	39,983	182,027

Device	Routing	Invert	Outlet Devices
#1	Primary	687.71'	**18.0" Round Culvert** L= 53.3' RCP, groove end projecting, Ke= 0.200 Inlet / Outlet Invert= 687.71' / 686.11' S= 0.0300 '/' Cc= 0.900 n= 0.013 Concrete pipe, straight & clean, Flow Area= 1.77 sf
#2	Device 1	687.71'	**13.0" Vert. Orifice/Grate** C= 0.600
#3	Device 2	687.71'	**10.0" W x 10.0" H Vert. Orifice/Grate** C= 0.600
#4	Device 2	690.50'	**36.0" Horiz. Orifice/Grate** C= 0.600 Limited to weir flow at low heads

Primary OutFlow Max=3.65 cfs @ 13.53 hrs HW=689.33' TW=0.00' (Dynamic Tailwater)
- **1=Culvert** (Passes 3.65 cfs of 9.92 cfs potential flow)
  - **2=Orifice/Grate** (Passes 3.65 cfs of 4.61 cfs potential flow)
    - **3=Orifice/Grate** (Orifice Controls 3.65 cfs @ 5.25 fps)
    - **4=Orifice/Grate** (Controls 0.00 cfs)

PROPOSED
Prepared by Hewlett-Packard Company
HydroCAD® 10.00-14 s/n 07894 © 2015 HydroCAD Software Solutions LLC

Pond NORTH: NORTH POND

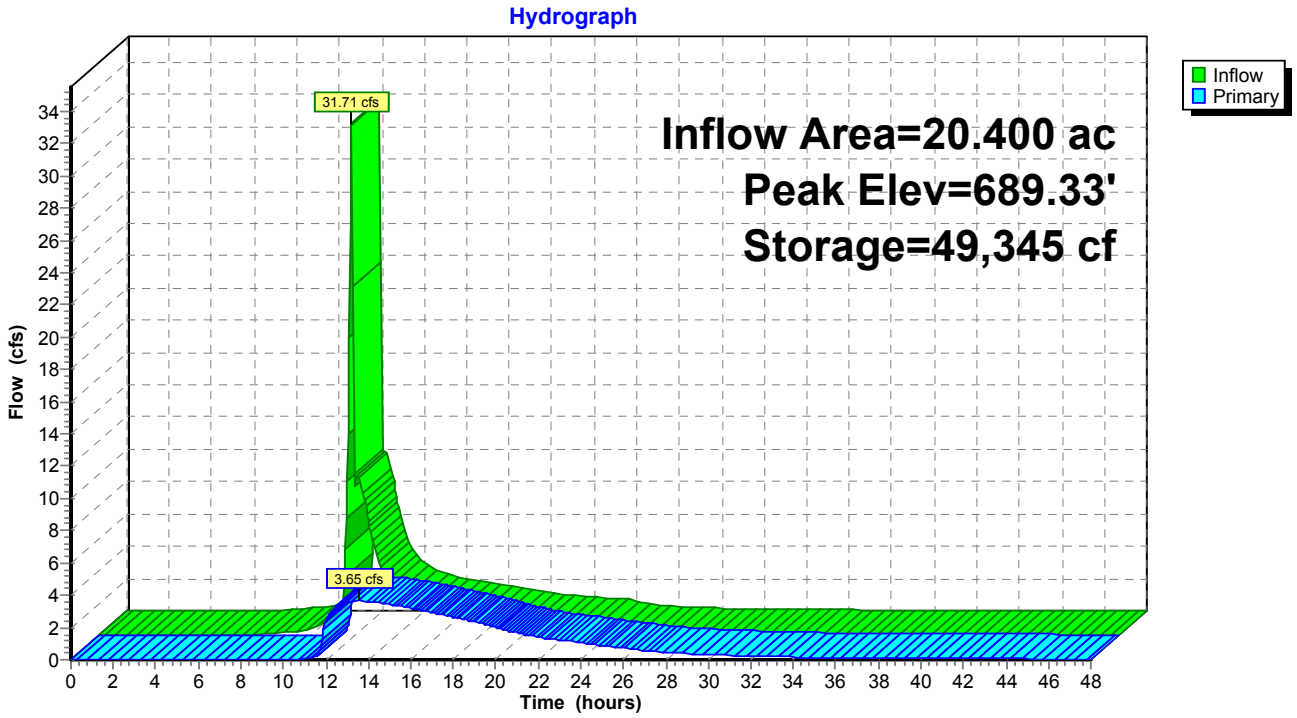

Summary for Pond SOUTH: SOUTH POND

Inflow Area = 11.200 ac, 82.14% Impervious, Inflow Depth = 2.03" for 2-YEAR event
Inflow = 32.89 cfs @ 12.01 hrs, Volume= 1.897 af
Outflow = 6.93 cfs @ 12.26 hrs, Volume= 1.858 af, Atten= 79%, Lag= 14.9 min
Primary = 6.93 cfs @ 12.26 hrs, Volume= 1.858 af

Routing by Dyn-Stor-Ind method, Time Span= 0.00-48.00 hrs, dt= 0.05 hrs
Peak Elev= 689.92' @ 12.26 hrs Surf.Area= 28,739 sf Storage= 39,391 cf

Plug-Flow detention time= 213.5 min calculated for 1.856 af (98% of inflow)
Center-of-Mass det. time= 202.1 min (995.8 - 793.7)

Volume	Invert	Avail.Storage	Storage Description
#1	688.52'	176,374 cf	**Custom Stage Data (Prismatic)** Listed below (Recalc)

Elevation (feet)	Surf.Area (sq-ft)	Inc.Store (cubic-feet)	Cum.Store (cubic-feet)
688.52	27,523	0	0
689.00	27,810	13,280	13,280
690.00	28,816	28,313	41,593
692.00	33,428	62,244	103,837
693.00	36,243	34,836	138,672
694.00	39,160	37,702	176,374

Device	Routing	Invert	Outlet Devices
#1	Primary	688.52'	**24.0" Round RCP_Round 24"** L= 117.0' RCP, groove end projecting, Ke= 0.200 Inlet / Outlet Invert= 688.52' / 687.92' S= 0.0051 '/' Cc= 0.900 n= 0.013 Concrete pipe, straight & clean, Flow Area= 3.14 sf
#2	Device 1	688.52'	**18.0" Vert. Orifice/Grate** C= 0.600

Primary OutFlow Max=6.93 cfs @ 12.26 hrs HW=689.92' TW=688.92' (Dynamic Tailwater)
└─**1=RCP_Round 24"** (Passes 6.93 cfs of 8.13 cfs potential flow)
└─**2=Orifice/Grate** (Orifice Controls 6.93 cfs @ 4.03 fps)

PROPOSED
Prepared by Hewlett-Packard Company
HydroCAD® 10.00-14 s/n 07894 © 2015 HydroCAD Software Solutions LLC

Pond SOUTH: SOUTH POND

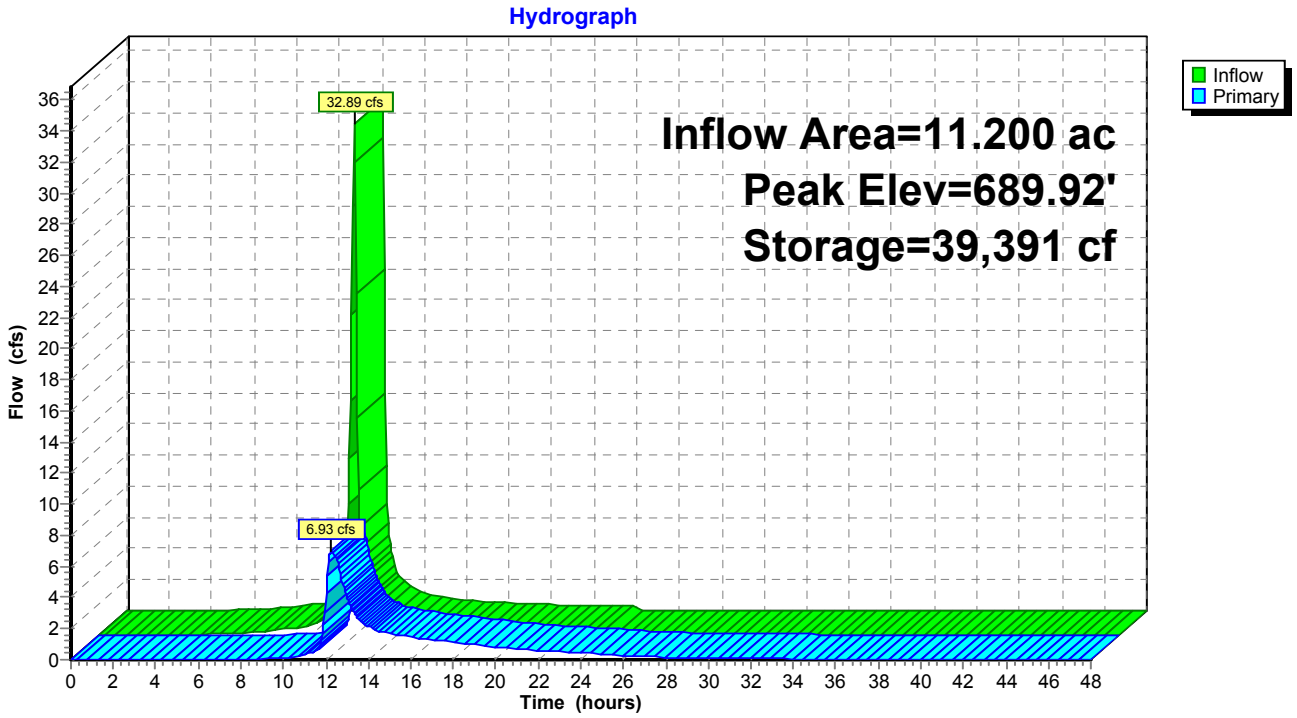

Summary for Link OUT: OUTFALL

Inflow Area = 20.400 ac, 73.53% Impervious, Inflow Depth > 1.78" for 2-YEAR event
Inflow = 3.65 cfs @ 13.53 hrs, Volume= 3.022 af
Primary = 3.65 cfs @ 13.53 hrs, Volume= 3.022 af, Atten= 0%, Lag= 0.0 min

Primary outflow = Inflow, Time Span= 0.00-48.00 hrs, dt= 0.05 hrs

Link OUT: OUTFALL

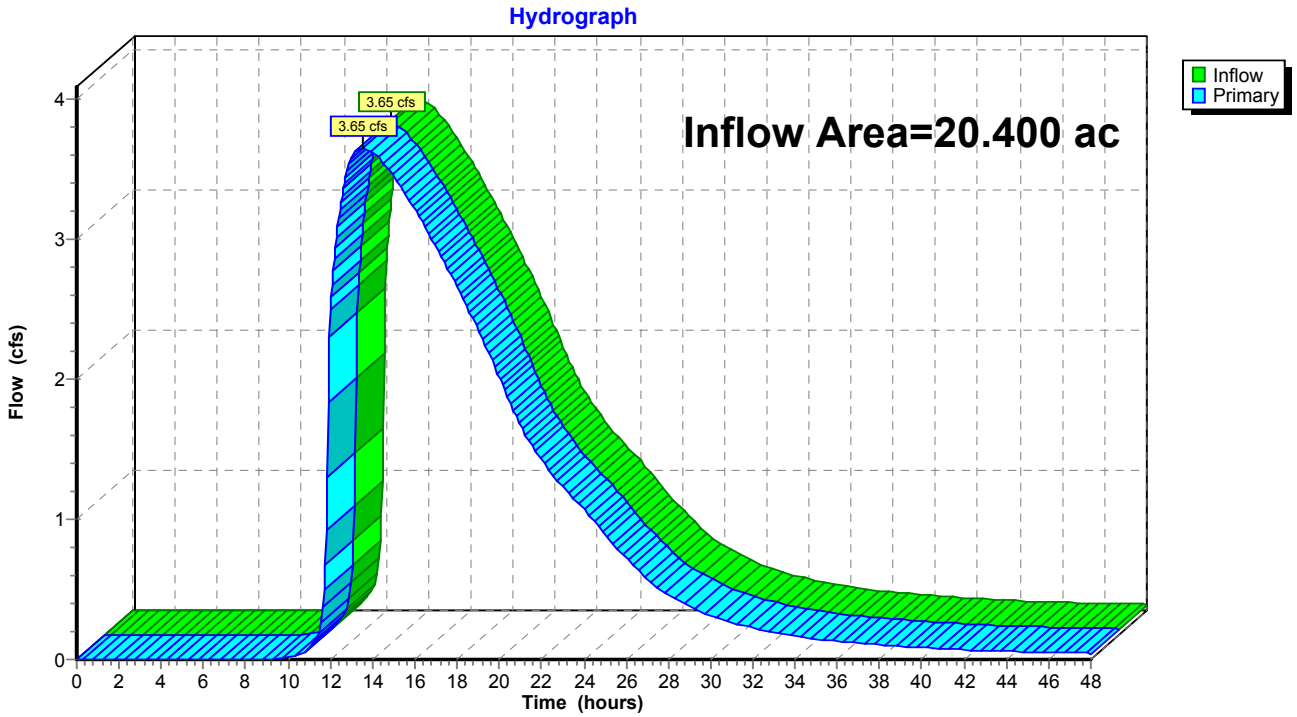

Summary for Subcatchment A1: NORTH

Runoff = 46.10 cfs @ 11.89 hrs, Volume= 1.971 af, Depth= 2.57"

Runoff by SCS TR-20 method, UH=SCS, Weighted-CN, Time Span= 0.00-48.00 hrs, dt= 0.05 hrs
Type II 24-hr 10-YEAR Rainfall=3.73"

Area (ac)	CN	Description
3.200	98	Roofs, HSG C
1.900	98	Paved parking, HSG C
0.700	98	Water Surface, HSG C
3.400	74	>75% Grass cover, Good, HSG C
9.200	89	Weighted Average
3.400		36.96% Pervious Area
5.800		63.04% Impervious Area

Subcatchment A1: NORTH

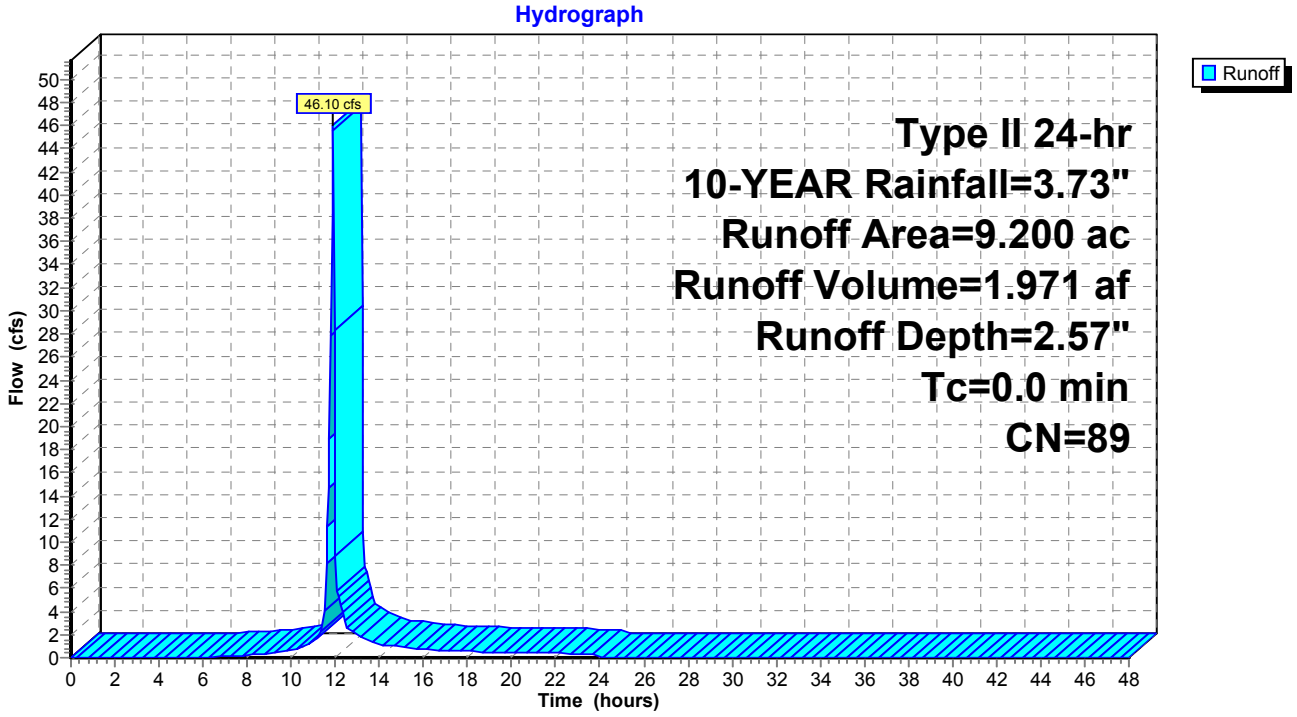

Summary for Subcatchment A2: SOUTH

Runoff = 48.34 cfs @ 12.01 hrs, Volume= 2.856 af, Depth= 3.06"

Runoff by SCS TR-20 method, UH=SCS, Weighted-CN, Time Span= 0.00-48.00 hrs, dt= 0.05 hrs
Type II 24-hr 10-YEAR Rainfall=3.73"

Area (ac)	CN	Description
5.200	98	Paved parking, HSG C
0.600	98	Water Surface, HSG C
2.000	74	>75% Grass cover, Good, HSG C
3.400	98	Roofs, HSG C
11.200	94	Weighted Average
2.000		17.86% Pervious Area
9.200		82.14% Impervious Area

Tc (min)	Length (feet)	Slope (ft/ft)	Velocity (ft/sec)	Capacity (cfs)	Description
10.0					**Direct Entry,**

Subcatchment A2: SOUTH

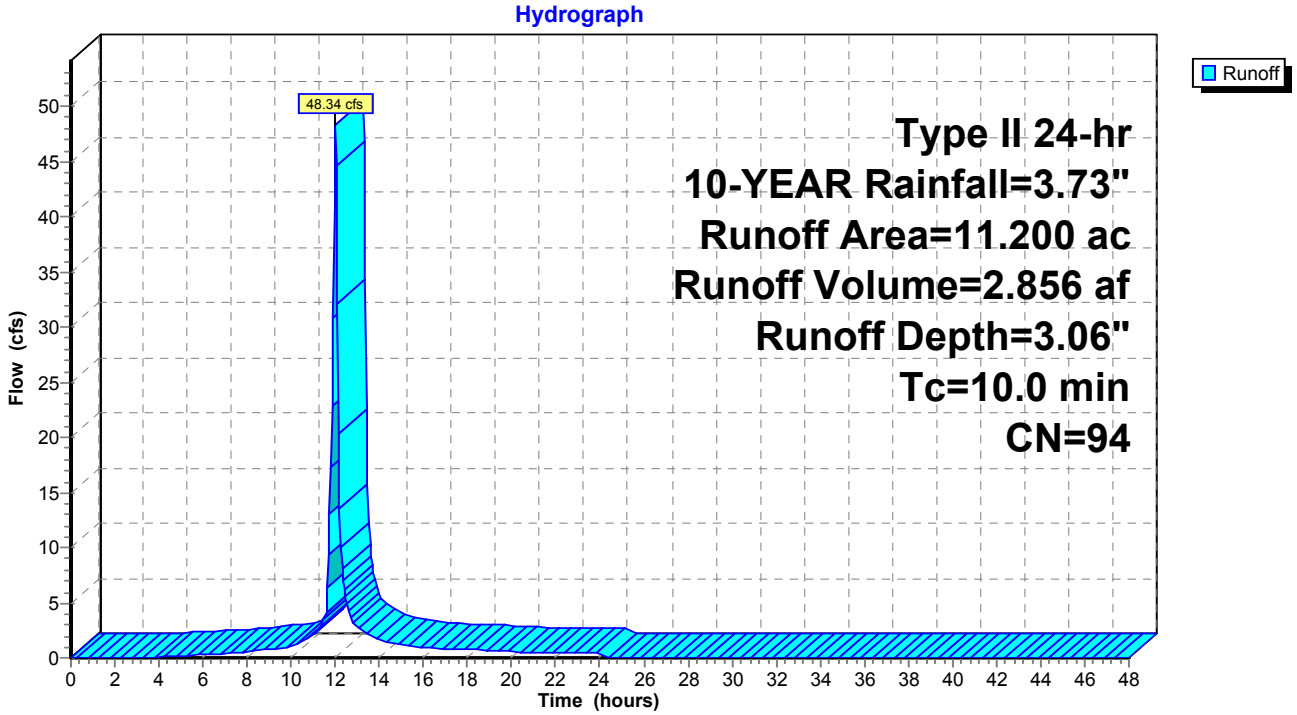

Summary for Pond NORTH: NORTH POND

Inflow Area = 20.400 ac, 73.53% Impervious, Inflow Depth > 2.81" for 10-YEAR event
Inflow = 50.18 cfs @ 11.89 hrs, Volume= 4.785 af
Outflow = 4.74 cfs @ 13.56 hrs, Volume= 4.713 af, Atten= 91%, Lag= 99.8 min
Primary = 4.74 cfs @ 13.56 hrs, Volume= 4.713 af

Routing by Dyn-Stor-Ind method, Time Span= 0.00-48.00 hrs, dt= 0.05 hrs
Peak Elev= 690.15' @ 13.56 hrs Surf.Area= 33,036 sf Storage= 75,628 cf

Plug-Flow detention time= 246.4 min calculated for 4.713 af (98% of inflow)
Center-of-Mass det. time= 227.4 min (1,152.9 - 925.6)

Volume	Invert	Avail.Storage	Storage Description
#1	687.71'	182,027 cf	**Custom Stage Data (Prismatic)** Listed below (Recalc)

Elevation (feet)	Surf.Area (sq-ft)	Inc.Store (cubic-feet)	Cum.Store (cubic-feet)
687.71	29,584	0	0
688.00	30,000	8,640	8,640
689.00	30,866	30,433	39,073
690.00	32,575	31,721	70,793
691.00	35,703	34,139	104,932
692.00	38,522	37,113	142,045
693.00	41,443	39,983	182,027

Device	Routing	Invert	Outlet Devices
#1	Primary	687.71'	**18.0" Round Culvert** L= 53.3' RCP, groove end projecting, Ke= 0.200 Inlet / Outlet Invert= 687.71' / 686.11' S= 0.0300 '/' Cc= 0.900 n= 0.013 Concrete pipe, straight & clean, Flow Area= 1.77 sf
#2	Device 1	687.71'	**13.0" Vert. Orifice/Grate** C= 0.600
#3	Device 2	687.71'	**10.0" W x 10.0" H Vert. Orifice/Grate** C= 0.600
#4	Device 2	690.50'	**36.0" Horiz. Orifice/Grate** C= 0.600 Limited to weir flow at low heads

Primary OutFlow Max=4.74 cfs @ 13.56 hrs HW=690.15' TW=0.00' (Dynamic Tailwater)
- **1=Culvert** (Passes 4.74 cfs of 13.82 cfs potential flow)
  - **2=Orifice/Grate** (Passes 4.74 cfs of 6.11 cfs potential flow)
    - **3=Orifice/Grate** (Orifice Controls 4.74 cfs @ 6.83 fps)
    - **4=Orifice/Grate** (Controls 0.00 cfs)

PROPOSED
Prepared by Hewlett-Packard Company
HydroCAD® 10.00-14 s/n 07894 © 2015 HydroCAD Software Solutions LLC

Pond NORTH: NORTH POND

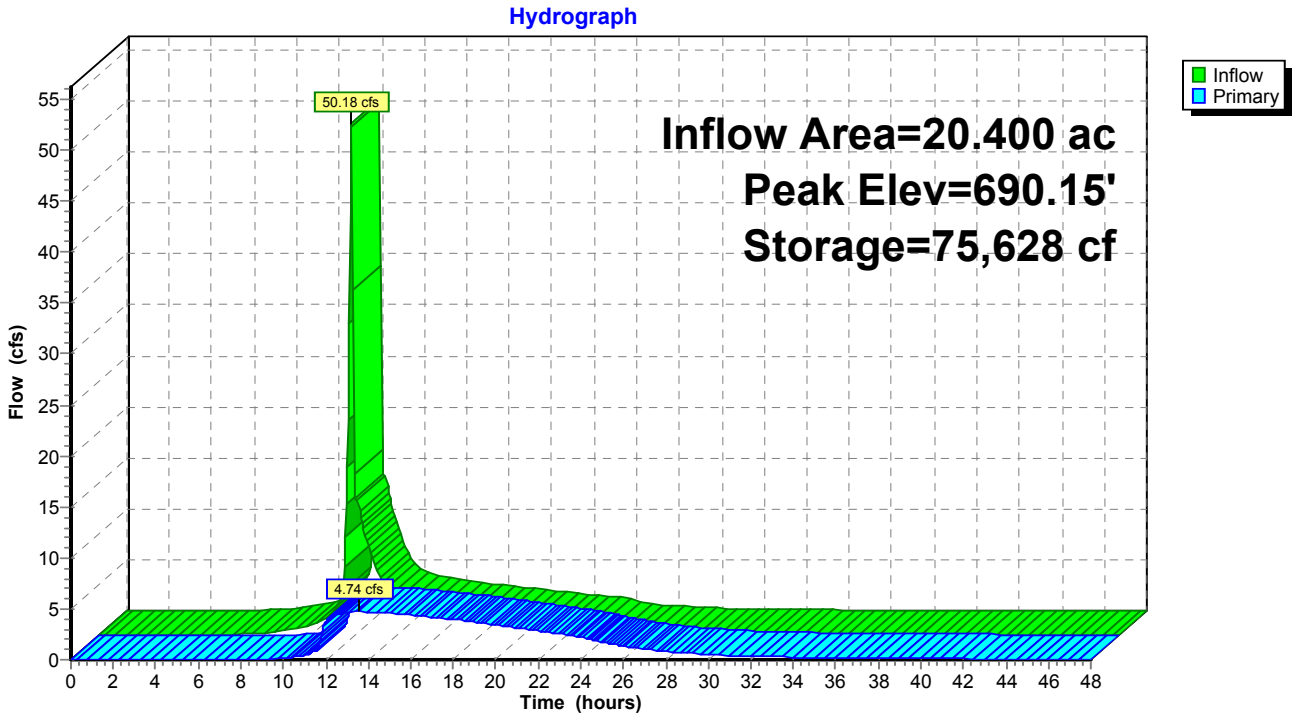

Summary for Pond SOUTH: SOUTH POND

Inflow Area = 11.200 ac, 82.14% Impervious, Inflow Depth = 3.06" for 10-YEAR event
Inflow = 48.34 cfs @ 12.01 hrs, Volume= 2.856 af
Outflow = 8.43 cfs @ 12.17 hrs, Volume= 2.814 af, Atten= 83%, Lag= 9.8 min
Primary = 8.43 cfs @ 12.17 hrs, Volume= 2.814 af

Routing by Dyn-Stor-Ind method, Time Span= 0.00-48.00 hrs, dt= 0.05 hrs
Peak Elev= 690.59' @ 12.31 hrs Surf.Area= 30,173 sf Storage= 58,949 cf

Plug-Flow detention time= 242.7 min calculated for 2.814 af (99% of inflow)
Center-of-Mass det. time= 233.4 min (1,016.0 - 782.6)

Volume	Invert	Avail.Storage	Storage Description
#1	688.52'	176,374 cf	**Custom Stage Data (Prismatic)** Listed below (Recalc)

Elevation (feet)	Surf.Area (sq-ft)	Inc.Store (cubic-feet)	Cum.Store (cubic-feet)
688.52	27,523	0	0
689.00	27,810	13,280	13,280
690.00	28,816	28,313	41,593
692.00	33,428	62,244	103,837
693.00	36,243	34,836	138,672
694.00	39,160	37,702	176,374

Device	Routing	Invert	Outlet Devices
#1	Primary	688.52'	**24.0" Round RCP_Round 24"** L= 117.0' RCP, groove end projecting, Ke= 0.200 Inlet / Outlet Invert= 688.52' / 687.92' S= 0.0051 '/' Cc= 0.900 n= 0.013 Concrete pipe, straight & clean, Flow Area= 3.14 sf
#2	Device 1	688.52'	**18.0" Vert. Orifice/Grate** C= 0.600

Primary OutFlow Max=8.17 cfs @ 12.17 hrs HW=690.53' TW=689.61' (Dynamic Tailwater)
└─**1=RCP_Round 24"** (Passes 8.17 cfs of 12.84 cfs potential flow)
└─**2=Orifice/Grate** (Orifice Controls 8.17 cfs @ 4.62 fps)

PROPOSED
Prepared by Hewlett-Packard Company
HydroCAD® 10.00-14 s/n 07894 © 2015 HydroCAD Software Solutions LLC

Pond SOUTH: SOUTH POND

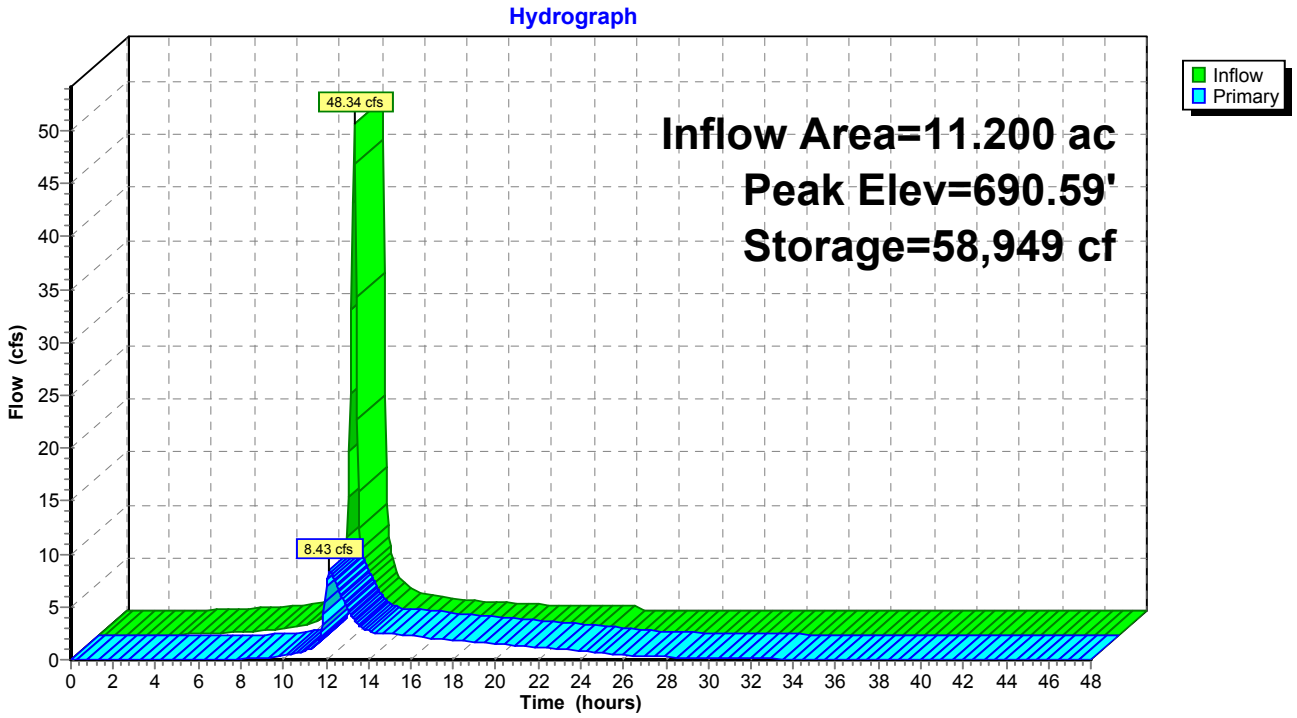

Summary for Link OUT: OUTFALL

Inflow Area = 20.400 ac, 73.53% Impervious, Inflow Depth > 2.77" for 10-YEAR event
Inflow = 4.74 cfs @ 13.56 hrs, Volume= 4.713 af
Primary = 4.74 cfs @ 13.56 hrs, Volume= 4.713 af, Atten= 0%, Lag= 0.0 min

Primary outflow = Inflow, Time Span= 0.00-48.00 hrs, dt= 0.05 hrs

Link OUT: OUTFALL

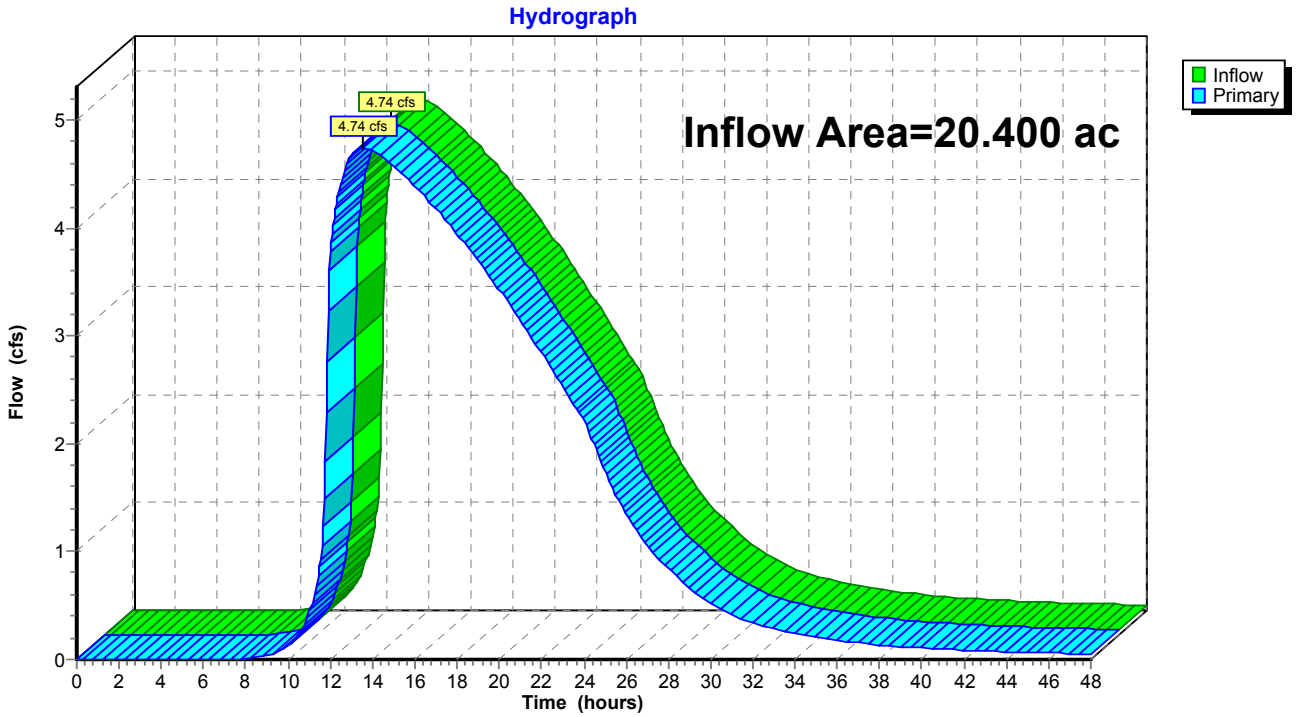

Summary for Subcatchment A1: NORTH

Runoff = 79.08 cfs @ 11.89 hrs, Volume= 3.519 af, Depth= 4.59"

Runoff by SCS TR-20 method, UH=SCS, Weighted-CN, Time Span= 0.00-48.00 hrs, dt= 0.05 hrs
Type II 24-hr 100-YEAR Rainfall=5.85"

Area (ac)	CN	Description
3.200	98	Roofs, HSG C
1.900	98	Paved parking, HSG C
0.700	98	Water Surface, HSG C
3.400	74	>75% Grass cover, Good, HSG C
9.200	89	Weighted Average
3.400		36.96% Pervious Area
5.800		63.04% Impervious Area

Subcatchment A1: NORTH

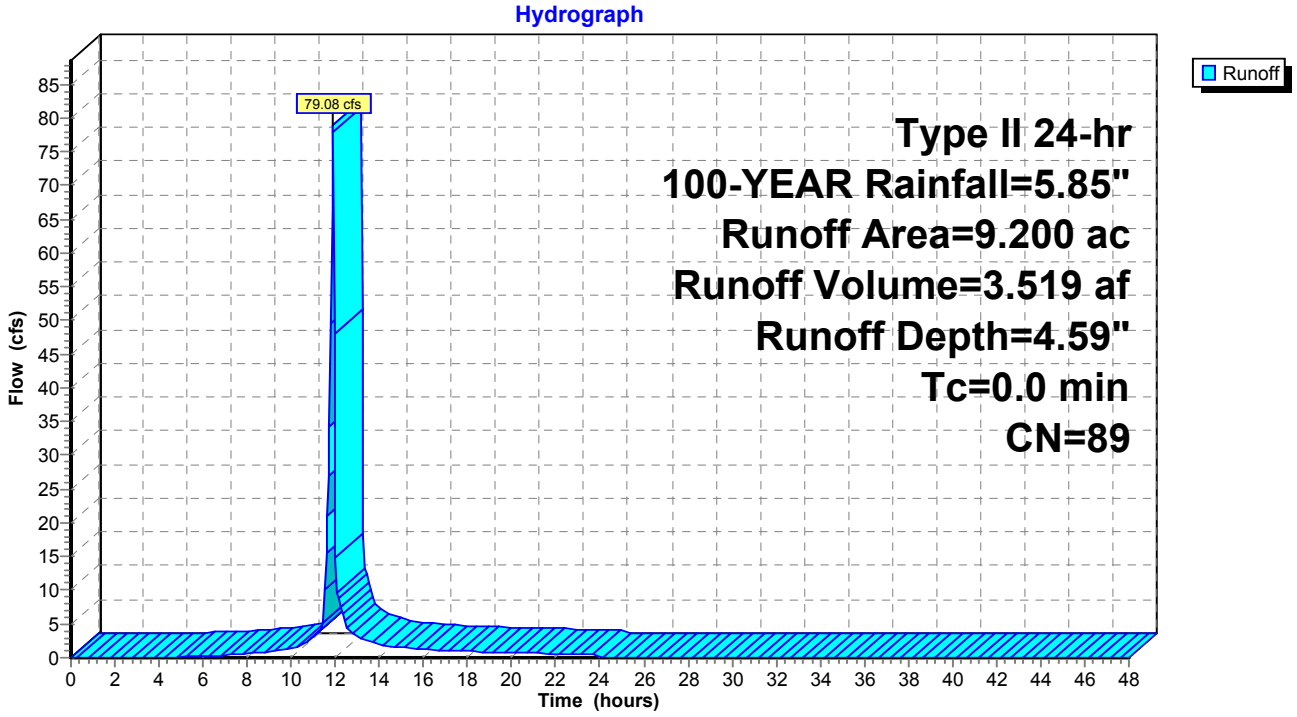

Summary for Subcatchment A2: SOUTH

Runoff = 78.82 cfs @ 12.01 hrs, Volume= 4.805 af, Depth= 5.15"

Runoff by SCS TR-20 method, UH=SCS, Weighted-CN, Time Span= 0.00-48.00 hrs, dt= 0.05 hrs
Type II 24-hr 100-YEAR Rainfall=5.85"

Area (ac)	CN	Description
5.200	98	Paved parking, HSG C
0.600	98	Water Surface, HSG C
2.000	74	>75% Grass cover, Good, HSG C
3.400	98	Roofs, HSG C
11.200	94	Weighted Average
2.000		17.86% Pervious Area
9.200		82.14% Impervious Area

Tc (min)	Length (feet)	Slope (ft/ft)	Velocity (ft/sec)	Capacity (cfs)	Description
10.0					**Direct Entry,**

Subcatchment A2: SOUTH

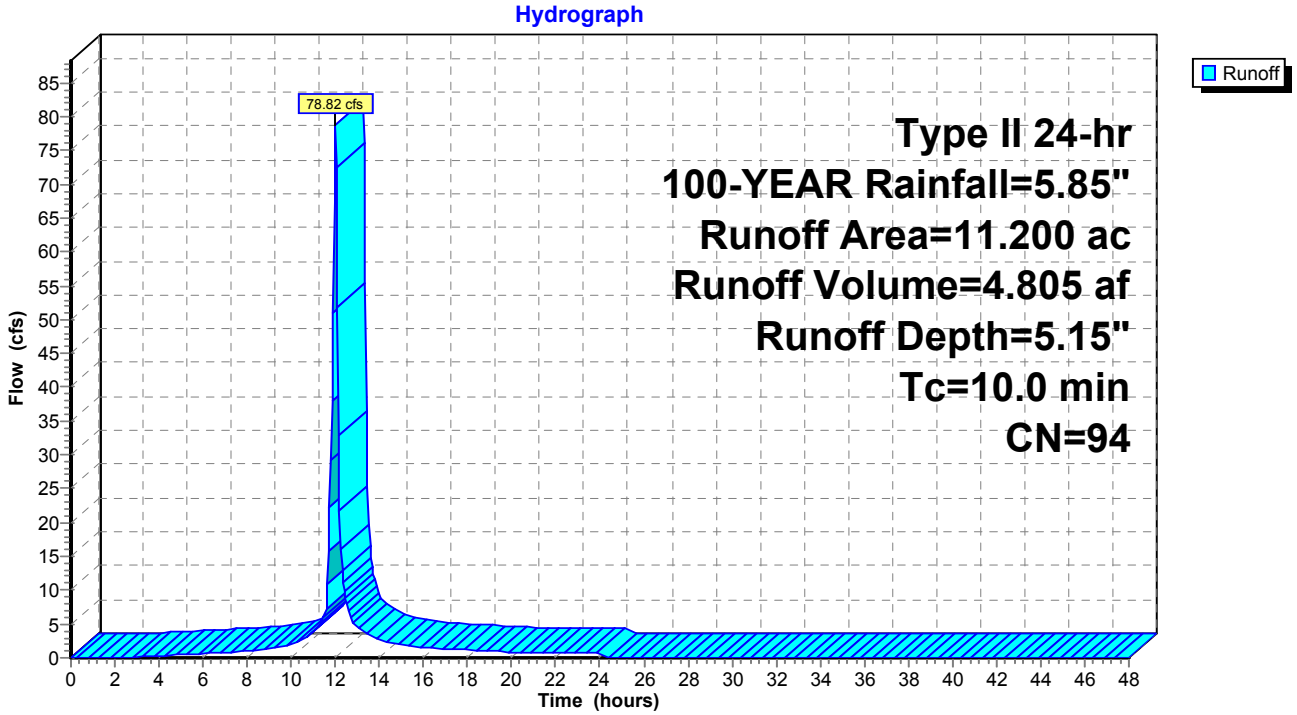

Summary for Pond NORTH: NORTH POND

Inflow Area = 20.400 ac, 73.53% Impervious, Inflow Depth > 4.87" for 100-YEAR event
Inflow = 83.94 cfs @ 11.89 hrs, Volume= 8.276 af
Outflow = 7.84 cfs @ 13.57 hrs, Volume= 8.191 af, Atten= 91%, Lag= 100.8 min
Primary = 7.84 cfs @ 13.57 hrs, Volume= 8.191 af

Routing by Dyn-Stor-Ind method, Time Span= 0.00-48.00 hrs, dt= 0.05 hrs
Peak Elev= 691.37' @ 13.57 hrs Surf.Area= 36,749 sf Storage= 118,378 cf

Plug-Flow detention time= 245.8 min calculated for 8.183 af (99% of inflow)
Center-of-Mass det. time= 232.7 min (1,166.8 - 934.1)

Volume	Invert	Avail.Storage	Storage Description
#1	687.71'	182,027 cf	**Custom Stage Data (Prismatic)** Listed below (Recalc)

Elevation (feet)	Surf.Area (sq-ft)	Inc.Store (cubic-feet)	Cum.Store (cubic-feet)
687.71	29,584	0	0
688.00	30,000	8,640	8,640
689.00	30,866	30,433	39,073
690.00	32,575	31,721	70,793
691.00	35,703	34,139	104,932
692.00	38,522	37,113	142,045
693.00	41,443	39,983	182,027

Device	Routing	Invert	Outlet Devices
#1	Primary	687.71'	**18.0" Round Culvert** L= 53.3' RCP, groove end projecting, Ke= 0.200 Inlet / Outlet Invert= 687.71' / 686.11' S= 0.0300 '/' Cc= 0.900 n= 0.013 Concrete pipe, straight & clean, Flow Area= 1.77 sf
#2	Device 1	687.71'	**13.0" Vert. Orifice/Grate** C= 0.600
#3	Device 2	687.71'	**10.0" W x 10.0" H Vert. Orifice/Grate** C= 0.600
#4	Device 2	690.50'	**36.0" Horiz. Orifice/Grate** C= 0.600 Limited to weir flow at low heads

Primary OutFlow Max=7.84 cfs @ 13.57 hrs HW=691.37' TW=0.00' (Dynamic Tailwater)
- **1=Culvert** (Passes 7.84 cfs of 18.15 cfs potential flow)
  - **2=Orifice/Grate** (Orifice Controls 7.84 cfs @ 8.50 fps)
    - **3=Orifice/Grate** (Passes < 6.02 cfs potential flow)
    - **4=Orifice/Grate** (Passes < 25.06 cfs potential flow)

PROPOSED
Prepared by Hewlett-Packard Company
HydroCAD® 10.00-14 s/n 07894 © 2015 HydroCAD Software Solutions LLC

Pond NORTH: NORTH POND

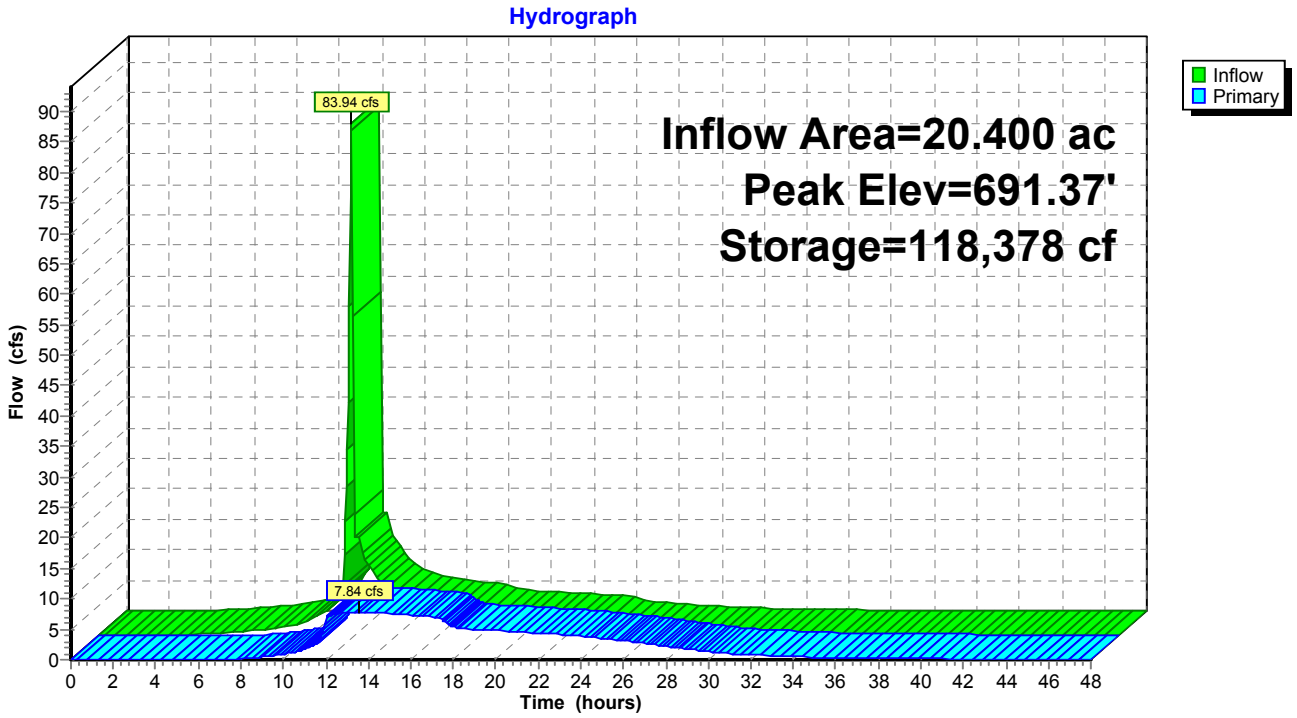

Summary for Pond SOUTH: SOUTH POND

Inflow Area = 11.200 ac, 82.14% Impervious, Inflow Depth = 5.15" for 100-YEAR event
Inflow = 78.82 cfs @ 12.01 hrs, Volume= 4.805 af
Outflow = 8.61 cfs @ 12.24 hrs, Volume= 4.757 af, Atten= 89%, Lag= 14.2 min
Primary = 8.61 cfs @ 12.24 hrs, Volume= 4.757 af

Routing by Dyn-Stor-Ind method, Time Span= 0.00-48.00 hrs, dt= 0.05 hrs
Peak Elev= 692.02' @ 12.49 hrs Surf.Area= 33,480 sf Storage= 104,453 cf

Plug-Flow detention time= 285.2 min calculated for 4.757 af (99% of inflow)
Center-of-Mass det. time= 278.6 min (1,047.9 - 769.3)

Volume	Invert	Avail.Storage	Storage Description
#1	688.52'	176,374 cf	**Custom Stage Data (Prismatic)** Listed below (Recalc)

Elevation (feet)	Surf.Area (sq-ft)	Inc.Store (cubic-feet)	Cum.Store (cubic-feet)
688.52	27,523	0	0
689.00	27,810	13,280	13,280
690.00	28,816	28,313	41,593
692.00	33,428	62,244	103,837
693.00	36,243	34,836	138,672
694.00	39,160	37,702	176,374

Device	Routing	Invert	Outlet Devices
#1	Primary	688.52'	**24.0" Round RCP_Round 24"** L= 117.0' RCP, groove end projecting, Ke= 0.200 Inlet / Outlet Invert= 688.52' / 687.92' S= 0.0051 '/' Cc= 0.900 n= 0.013 Concrete pipe, straight & clean, Flow Area= 3.14 sf
#2	Device 1	688.52'	**18.0" Vert. Orifice/Grate** C= 0.600

Primary OutFlow Max=8.41 cfs @ 12.24 hrs HW=691.94' TW=690.97' (Dynamic Tailwater)
└─**1=RCP_Round 24"** (Passes 8.41 cfs of 15.28 cfs potential flow)
└─**2=Orifice/Grate** (Orifice Controls 8.41 cfs @ 4.76 fps)

PROPOSED
Prepared by Hewlett-Packard Company
HydroCAD® 10.00-14 s/n 07894 © 2015 HydroCAD Software Solutions LLC

Pond SOUTH: SOUTH POND

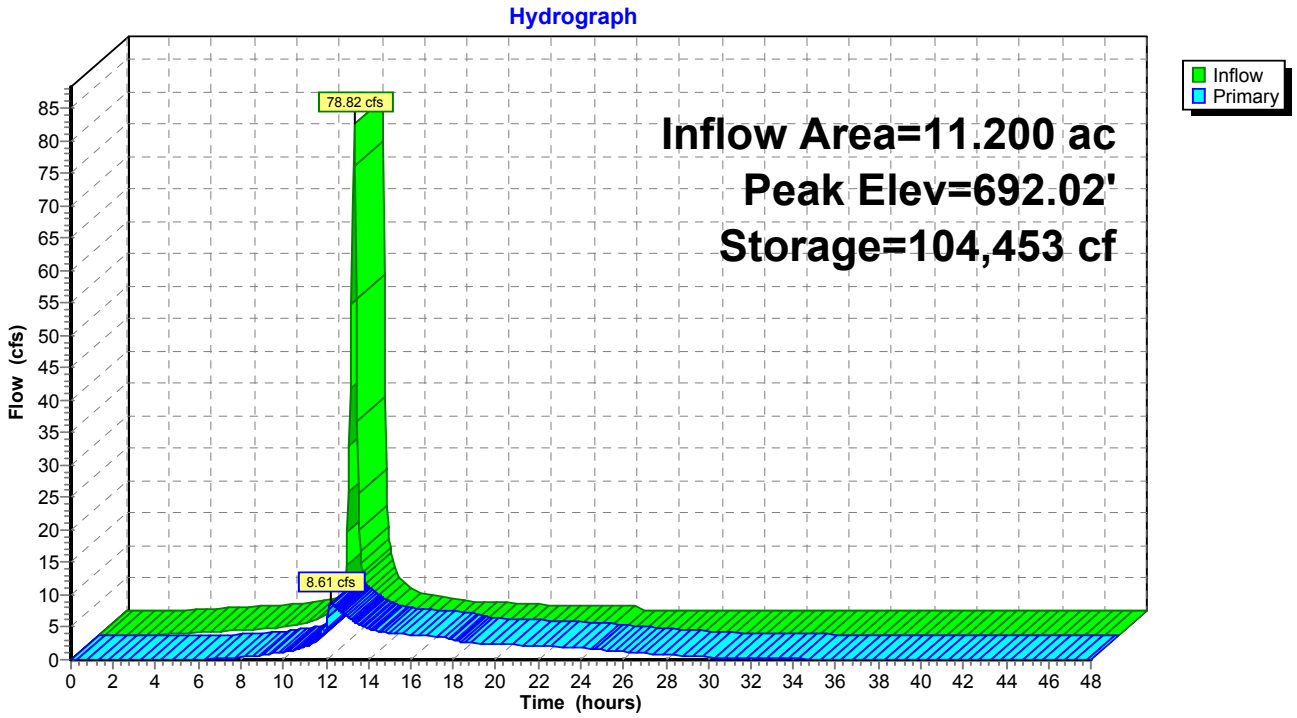

Summary for Link OUT: OUTFALL

Inflow Area = 20.400 ac, 73.53% Impervious, Inflow Depth > 4.82" for 100-YEAR event
Inflow = 7.84 cfs @ 13.57 hrs, Volume= 8.191 af
Primary = 7.84 cfs @ 13.57 hrs, Volume= 8.191 af, Atten= 0%, Lag= 0.0 min

Primary outflow = Inflow, Time Span= 0.00-48.00 hrs, dt= 0.05 hrs

Link OUT: OUTFALL

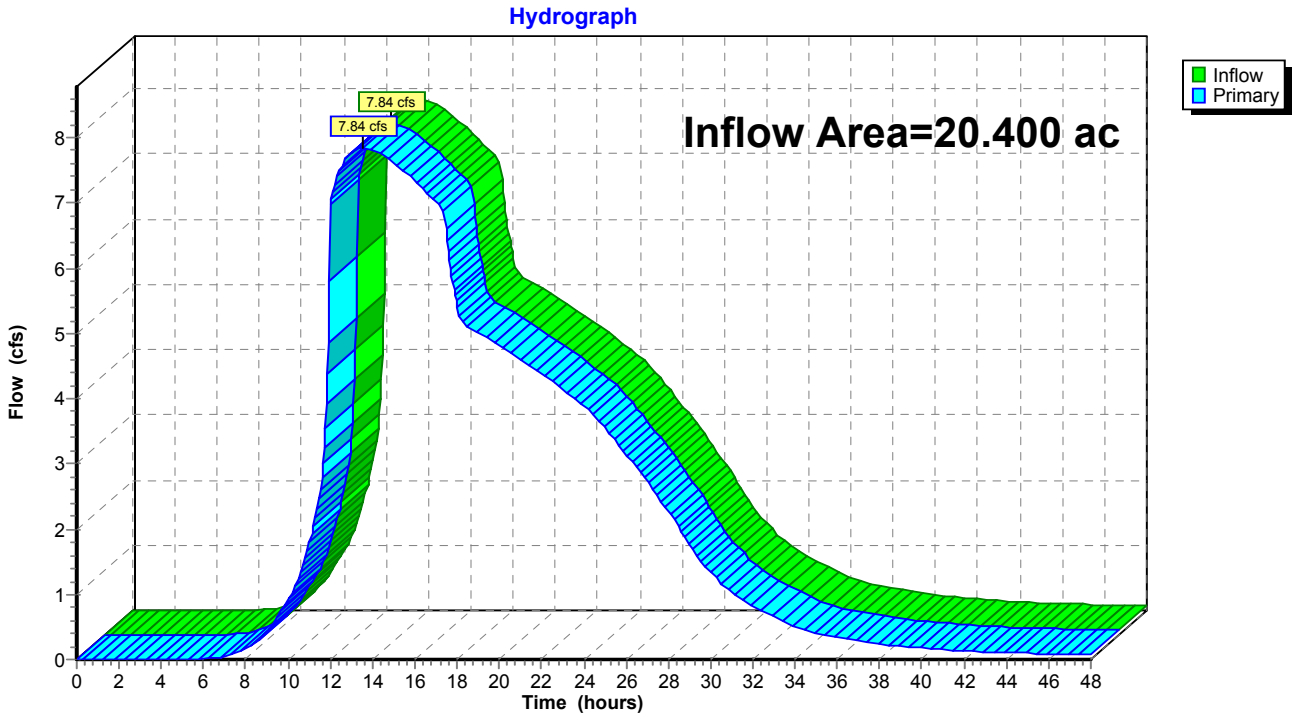

PINNACLE ENGINEERING GROUP
Plan | Design | Deliver
www.pinnacle-engr.com

STORM SEWER COMPUTATIONS
FOR
LAKEVIEW LOT 40

PLEASANT PRAIRIE, WI

SHEET 1 OF 1
DESIGN BY: DCC
PROJECT NUMBER: 559.00A
DATE: 7/15/2016

DESIGN DATA

STRUCTURE DATA			DRAINAGE AREA AND FLOW DATA (Flow is determined by SPS 382.36)					PIPE DATA				PIPE CAPACITY INFORMATION (Pipe capacity is determined by Manning's Equation $Q = 1.486/n\ AR^{2/3}\ S^{1/2}$)					ELEVATIONS		
Pipe Run	Upstream Structure	Downstream Structure	Roof Area (sf)	Pvmt Area (sf)	Grass Area (sf)	Individual Flow Q (cfs)	Cumulative Flow (cfs)	Length (ft)	Diameter (in)	Slope (%)	Manning Coefficient	Required Drop (ft)	Actual Drop (ft)	Percent Full (%)	Actual Velocity (fps)	Max. Capacity (cfs)	Rim/Toc Up	Invert Up	Invert Down
	ES 6.0	CB 5.0	0	0	200000	4.28	4.28	69.90	12	6.50	0.012	0.86	4.54	45%	12.10	10.59	698.70	695.84	691.29
	CB 5.0	CB 4.0	55138	33180	38087	7.82	7.82	192.10	18	0.70	0.012	0.91	1.34	74%	6.01	10.24	696.50	691.29	689.95
	CB 4.0	CB 3.0	0	11509	10046	1.00	11.49	171.00	24	0.25	0.012	0.38	0.43	82%	4.43	13.18	696.50	689.95	689.52
	CB 3.0	CB 2.0	0	11360	9681	0.99	14.48	180.00	24	0.70	0.012	0.63	1.26	65%	7.08	22.06	696.50	689.52	688.26
	CB 2.0	ES 1.0	0	11301	7552	0.94	18.08	138.00	30	0.40	0.012	0.23	0.55	61%	6.08	30.23	696.50	688.26	687.71
	BC 4.1	CB 4.0	31105	0	0	2.67	2.67	57.00	10	4.53	0.012	0.72	2.58	52%	9.39	5.44	698.75	695.75	693.17
	BC 3.1	CB 3.0	23452	0	0	2.01	2.01	57.00	10	4.53	0.012	0.41	2.58	42%	8.73	5.44	698.75	695.75	693.17
	BC 2.1	CB 2.0	31105	0	0	2.67	2.67	57.00	10	4.53	0.012	0.72	2.58	52%	9.39	5.44	698.75	695.75	693.17
	ES 15.0	CB 14.0	57977	64260	12182	9.64	9.64	261.85	24	0.20	0.012	0.40	0.52	78%	3.94	11.79	696.60	690.88	690.36
	CB 14.0	CB 13.0	0	10060	0	0.69	13.15	95.50	24	0.40	0.012	0.28	0.38	76%	5.54	16.67	694.75	690.36	689.97
	CB 13.0	CB 12.0	0	10423	0	0.71	16.00	118.10	24	0.50	0.012	0.50	0.59	81%	6.26	18.64	694.75	689.97	689.38
	CB 12.0	CB 11.0	0	12673	5657	0.99	19.82	233.80	30	0.30	0.012	0.47	0.70	73%	5.53	26.18	694.75	689.38	688.68
	CB 11.0	ES 10.0	0	10986	6926	0.90	21.39	64.70	30	0.25	0.012	0.15	0.16	85%	5.16	23.90	696.30	688.68	688.52
	BC 14.1	CB 14.0	33001	0	0	2.83	2.83	10.00	10	3.33	0.012	0.14	0.33	61%	8.47	4.66	694.75	691.75	691.42
	BC 13.1	CB 13.0	24882	0	0	2.13	2.13	10.00	10	3.33	0.012	0.08	0.33	49%	7.91	4.66	694.75	691.75	691.42
	BC 12.1	CB 12.0	33002	0	0	2.83	2.83	10.00	10	3.33	0.012	0.14	0.33	61%	8.47	4.66	694.75	691.75	691.42
	CB 11.1	CB 11.0	0	8757	3435	0.67	0.67	124.40	8	2.00	0.012	0.33	2.49	40%	4.88	1.99	696.30	691.17	688.68
	CB 27.0	CB 26.0	0	4281	3323	0.36	0.36	30.00	8	0.75	0.012	0.02	0.23	36%	2.89	1.22	692.35	688.95	688.72
	CB 26.0	ES 25.0	0	4250	424	0.30	0.67	26.70	8	0.75	0.012	0.07	0.20	56%	3.38	1.22	692.35	688.72	688.52
	CB 21.0	ES 20.0	0	10501	2357	0.77	0.77	30.10	8	10.00	0.012	0.10	3.01	24%	9.07	4.45	695.15	690.72	687.71

LAKEVIEW LOT 40

LAKEVIEW CORPORATE PARK

PLEASANT PRAIRIE, WISCONSIN

PROJECT DATA

APPLICABLE CODES:

INTERNATIONAL BUILDING CODE - 2009 AS MODIFIED BY THE WISCONSIN ENROLLED COMMERCIAL BUILDING CODE IN CHAPTER SPS 362.

BUILDING CLASSIFICATION:

STORAGE:
S-1 (MODERATE HAZARD)

CONSTRUCTION CLASSIFICATION:

TYPE 2B - UNPROTECTED W/ AUTOMATIC SPRINKLER SYSTEM

BUILDING AREA:
118,273 SF.

PROJECT DEVELOPMENT DATA:

PROPOSED LAKEVIEW LOT 81:	
SITE ZONING:	M-2, GENERAL MANUFACTURING DISTRICT
SITE AREA:	16.67 ACRES (726,145 SF.)
BUILDING AREA:	118,273 SF.
BLDG. COVERAGE RATIO:	
BUILDING IMPERVIOUS AREA:	118,273 SF.
ALL OTHER IMPERVIOUS AREA:	311,791 SF.
TOTAL IMPERVIOUS AREA:	430,065 SF.
TOTAL IMPERVIOUS PERCENTAGE:	61.5%
GREENSPACE COVERAGE RATIO:	
TOTAL LANDSCAPED AREA:	236,080 SF
TOTAL LANDSCAPED PERCENTAGE	32.5%
PARKING:	
TOTAL CAR SPACES (INCLUDING HANDICAPPED)	208 SPACES
TOTAL TRUCK/ DOCK SPACES	25 DOCK LOCATIONS

NOTE:
PRIOR TO CONSTRUCTION, A PRECONSTRUCTION MEETING MUST BE HELD AT THE VILLAGE OFFICES. THE PRECONSTRUCTION CONFERENCE SHALL BE SCHEDULED AND MODERATED BY THE DESIGN ENGINEER OF RECORD.

GENERAL NOTES

1. DO NOT SCALE DRAWINGS.
2. CONTRACTOR SHALL FIELD VERIFY AND BECOME THOROUGHLY FAMILIAR WITH ALL CONDITIONS & DIMENSIONS.
3. EACH CONTRACTOR SHALL REVIEW COMPLETE PLANS FOR RELATED WORK.
4. ALL WORK SHALL BE IN COMPLIANCE W/ STATE & LOCAL CODES FOR RESPECTIVE TRADES.

SHEET INDEX

T1 TITLE SHEET

CIVIL
C-1 COVER SHEET
C-2 EXISTING CONDITIONS
C-3 SITE DEMOLITION AND PAVING PLAN
C-4 GRADING PLAN
C-5 UTILITY PLAN
C-6 SITE STABILIZATION PLAN
C-7 CONSTRUCTION DETAILS
C-8 CONSTRUCTION DETAILS
C-9 CONSTRUCTION DETAILS

ARCHITECTURAL
A0.1 SITE PLAN & DETAILS
A0.2 SITE PHOTOS
A4.1 CONCEPTUAL BUILDING ELEVATIONS

OWNER:
DOHENY ENTERPRISES INC.
6250 51ST
KENOSHA, WISCONSIN 53144
PHONE: 847.366.6460
ATTN: JOHN DOHENY

CONTRACTOR:
PRINCIPLE CONSTRUCTION CORPORATION
9450 WEST BRYN MAWR, SUITE 765
ROSEMONT, ILLINOIS 60018
PHONE: (847) 615-1515, EXT. 140
ATTN: JIM BRUCATO

ARCHITECT:
PARTNERS IN DESIGN ARCHITECTS
2610 LAKE COOK ROAD, SUITE 280
RIVERWOODS, ILLINOIS 60015
PHONE: 847.940.0500
ATTN: WERNER BRISSKE, AIA

CIVIL ENGINEER:
PINNACLE ENGINEERING GROUP
15850 W. BLUEMOUND ROAD, SUITE 314
BROOKFIELD, WISCONSIN 53005
PHONE: 414.581.3591
ATTN: ADAM ARTZ, P.E.

GOVERNING AGENCY CONTACTS

PLEASANT PRAIRIE VILLAGE HALL
9915 39TH STREET
PLEASANT PRAIRIE, WI 53158
OFFICE: (262) 694-1400

COMMUNITY DEVELOPMENT DEPARTMENT
JEAN WERBIE-HARRIS, DIRECTOR
- PLANNER, ZONING ADMINISTRATOR
OFFICE: (262) 925-6718
EMAIL: jwerbie-harris@plprairiewi.com

PEGGY HERRICK
- ASSISTANT PLANNER & ZONING ADMINISTRATOR
OFFICE: (262) 925-6716
EMAIL: pherrick@plprairiewi.com

KRISTINA TRANEL
- DEPUTY PLANNER & ZONING ADMINISTRATOR
OFFICE: (262) 925-6711
EMAIL: ktranel@plprairiewi.com

ENGINEERING DEPARTMENT
MATT FINEOUR, P.E.
- VILLAGE ENGINEER
OFFICE: (262) 925-6718
EMAIL: mfineour@plprairiewi.com

KURT DAVIDSEN, P.E.
- ASSISTANT VILLAGE ENGINEER
OFFICE: (262) 925-6728
EMAIL: kdavidsen@plprairiewi.com

PUBLIC WORKS DEPARTMENT
JOHN STEINBRINK, JR.
- SUPERINTENDENT
ROGER PRANGE MUNICIPAL BUILDING
8600 GREEN BAY ROAD
OFFICE: (262) 925-6768
EMAIL: jsteinbrink@plprairiewi.com

JESSE HOULE, P.E.
- CONSTRUCTION MANAGER
OFFICE (262) 948-8945
EMAIL: jhoule@plprairiewi.com

STEVE ULAHOVICH
- ENGINEERING TECHNICIAN
OFFICE: (262) 925-6767
EMAIL: sulahovich@plprairiewi.com

BUILDING INSPECTION DEPARTMENT
SANDRO PEREZ
-BUILDING INSPECTION SUPERINTENDENT
OFFICE: (262) 694-3304
DIRECT: (262) 925-6722
EMAIL: sperez@plprairiewi.com

DONALD KOENE
-BUILDING INSPECTOR
OFFICE: (262) 694-3304
EMAIL: dkoene@plprairiewi.com

MICHAEL KAPRELIAN
- BUILDING INSPECTOR
OFFICE: (262) 694-3304
EMAIL: mkaprelian@plprairiewi.com

FIRE & RESCUE DEPARTMENT
DOUG MCELMURY
- CHIEF OF FIRE & RESCUE
8044 88TH AVENUE
OFFICE: (262) 694-8021
EMAIL: dmcelmury@plprairiewi.com

CRAIG ROEPKE
- DEPUTY CHIEF
OFFICE: (262) 694-8021
EMAIL: croepke@plprairiewi.com

THOMAS CLARK
- LIEUTENANT
OFFICE: (262) 694-8021
EMAIL: tclark@plprairiewi.com

WI DEPARTMENT OF NATURAL RESOURCES
ELAINE JOHNSON
- WATER RESOURCE SPECIALIST
OFFICE: 262-884-2136
EMAIL: elaine.johnson@wisconsin.gov

PETER WOOD
- WATER RESOURCES ENGINEER
OFFICE: 262-884-2360
EMAIL: peter.wood@wisconsin.gov

PUBLIC UTILITY CONTACTS

AMERICAN TRANSMISSION COMPANY
BRIAN MCGEE
OFFICE: 262-506-6855
EMAIL: bmcgee@atcllc.com
EMERGENCY NUMBER: (800) 972-5341

WISCONSIN DOT
KEVIN KOEHNKE, PERMITS COORDINATOR
SOUTHEAST REGION
OFFICE: (262) 548-5691
EMAIL: kevinkoehnke@dot.wi.gov

AT&T
MIKE TOYEK
OFFICE: 262.636.0543
EMAIL: mt1134@att.com

TDS TELECOM
SOUTHEAST WISCONSIN
OFFICE: 877.483.7142

TIME WARNER CABLE
STEVE CRAMER
- UTILITY COORDINATOR
OFFICE: 414.277.6045
EMAIL: steve.cramer@twcable.com
EMERGENCY NUMBER: 800.672.7288

WE-ENERGIES
LINDA SCHREIER
KENOSHA SOUTH
OFFICE: 262.597.3278
EMAIL: linda.schreier@we-energies.com

NATURAL GAS EMERGENCY:
800.261.5325
ELECTRICAL EMERGENCY:
800.662.4797

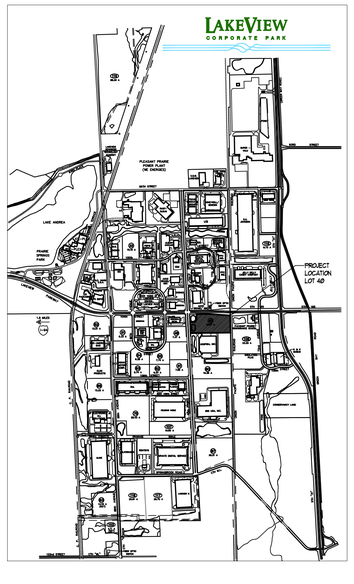

LOCATION MAP

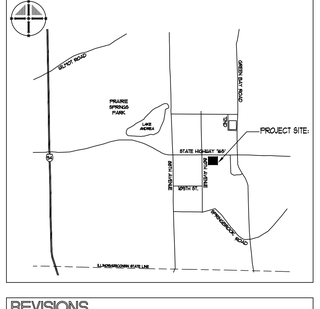

REVISIONS

PROJECT NUMBER:
535.09.034
DATE: JULY 18, 2016

SITE AND OPERATIONAL PLANS

THESE PLANS AND DESIGNS ARE COPYRIGHT PROTECTED AND MAY NOT BE USED IN WHOLE OR IN PART WITHOUT THE WRITTEN CONSENT OF PINNACLE ENGINEERING GROUP, LLC

ONSITE CIVIL ENGINEERING INFRASTRUCTURE PLANS

FOR

LAKEVIEW, LOT 40

PLEASANT PRAIRIE, WISCONSIN

PLANS PREPARED
FOR

DOHENY'S

6950 51ST STREET
KENOSHA, WI 53144

PROJECT
LOCATION

LOCATION MAP
SCALE: NTS
NORTH

LEGEND

EXISTING / PROPOSED

- SANITARY SEWER MANHOLE
- STORM SEWER MANHOLE
- STORM SEWER AREA DRAIN
- STORM SEWER INLET (ROUND CASTING)
- STORM SEWER INLET (RECTANGULAR CASTING)
- PRECAST FLARED END SECTION
- CONCRETE HEADWALL
- AIR RELEASE ASSEMBLY
- VALVE BOX
- FIRE HYDRANT
- BUFFALO BOX
- CLEANOUT
- SANITARY SEWER
- FORCE MAIN
- STORM SEWER
- DRAIN TILE
- WATER MAIN (W)
- UTILITY CROSSING (X)
- LIGHTING
- ELECTRICAL CABLE
- OVERHEAD WIRES (OHW)
- CAUTION EXISTING UTILITIES NEARBY
- ELECTRICAL TRANSFORMER OR PEDESTAL (E)
- POWER POLE
- POWER POLE WITH LIGHT
- STREET SIGN
- GAS MAIN
- TELEPHONE LINE
- CONTOUR (749)
- SPOT ELEVATION ×(750.00) / ×750.00
- WETLANDS
- FLOODWAY
- FLOODPLAIN
- HIGH WATER LEVEL (HWL)
- NORMAL WATER LEVEL (NWL)
- DIRECTION OF SURFACE FLOW (GRASS, PAVEMENT)
- DITCH OR SWALE
- DIVERSION SWALE
- OVERFLOW RELIEF ROUTING
- TREE WITH TRUNK SIZE (6")
- SOIL BORING (B-1)
- TOPSOIL PROBE (T-1)
- FENCE LINE, TEMPORARY SILT
- FENCE LINE, WIRE
- FENCE LINE, CHAIN LINK OR IRON
- FENCE LINE, WOOD OR PLASTIC
- CONCRETE SIDEWALK
- CURB AND GUTTER
- DEPRESSED CURB
- REVERSE PITCH CURB & GUTTER
- EASEMENT LINE

ABBREVIATIONS

BL	BASE LINE	NWL	NORMAL WATER LEVEL
C	LONG CHORD OF CURVE	PC	POINT OF CURVATURE
C & G	CURB AND GUTTER	PT	POINT OF TANGENCY
CB	CATCH BASIN	PVI	POINT OF VERTICAL INTERSECTION
CL	CENTERLINE	R	RADIUS
D	DEGREE OF CURVE	ROW	RIGHT-OF-WAY
EP	EDGE OF PAVEMENT	SAN	SANITARY SEWER
FF	FINISHED FLOOR	ST	STORM SEWER
FG	FINISHED GRADE	T	TANGENCY OF CURVE
FL	FLOW LINE	TB	TOP OF BANK
FP	FLOODPLAIN	TC	TOP OF CURB
FR	FRAME	TF	TOP OF FOUNDATION
FW	FLOODWAY	TP	TOP OF PIPE
HWL	HIGH WATER LEVEL	TS	TOP OF SIDEWALK
INV	INVERT	TW	TOP OF WALK
L	LENGTH OF CURVE	WM	WATER MAIN
MH	MANHOLE	△	INTERSECTION ANGLE

CONTACTS:

CIVIL ENGINEER:
MATT CAREY, P.E.
PINNACLE ENGINEERING GROUP
15850 BLUEMOUND ROAD, SUITE 310
BROOKFIELD, WI 53005
(262) 754-8888

CONTRACTOR:
JAMES A. BRUCATO, PRESIDENT
PRINCIPLE CONSTRUCTION CORP.
9450 W. BRYN MAWR, SUITE 765
ROSEMONT. IL 60018
OFFICE:(847)615-1515, EXT. 140
EMAIL: jbrucato@pccdb.com

OWNER:
JOHN DOHENY
6950 51ST STREET
KENOSHA, WI 53144
OFFICE:(262)605-3010
EMAIL: john@dohemy.com

ARCHITECT:
WERNER H. BRISSKE, A.I.A. ALA GGP
PARTNERS IN DESIGN ARCHITECTS
2610 LAKE COOK ROAD, SUITE 280
RIVERWOODS, IL 60015
OFFICE: (847)940-0300
EMAIL: pidarchitechs.com

SURVEYOR:
JOHN P. KONOPACKI, P.L.S.
PINNACLE ENGINEERING GROUP
15850 BLUEMOUND ROAD, SUITE 310
BROOKFIELD, WI 53005
(262) 754-8888

PUBLIC UTILITY CONTACTS:

AMERICAN TRANSMISSION COMPANY:
BRIAN MCGEE
EMAIL: 262-506-68955
EMAIL: bmcgee@atcllc.com
EMERGENCY NUMBER: (800) 972-5341

WISCONSIN D.O.T.:
KEVIN KOEHNKE,
PERMITS COORDINATOR SOUTHEAST REGION
OFFICE: (262) 548-5891
EMAIL: kevin.koehnke@dot.wi.gov

AT&T:
MIKE TOYEK
OFFICE: 262-636-0549
EMAIL: mt1734@att.com

TDS TELECOM:
SOUTHEAST WISCONSIN
OFFICE: 877-483-7142

TIME WARNER CABLE:
STEVE CRAMER
UTILITY COORDINATOR
OFFICE: 414-277-4045
EMAIL: steve.cramer@twcable.com
EMERGENCY NUMBER: (800) 627-2288

WE-ENERGIES:
LINDA SCHREIER
KENOSHA SOUTH
262-552-3228
linda.schreier@we-energies.com

NATURAL GAS EMERGENCY:
800-261-5325
ELECTRICAL EMERGENCY:
800-662-4797

GOVERNING AGENCY CONTACTS:

PLEASANT PRAIRIE VILLAGE HALL:
9915 39TH STREET
PLEASANT PRAIRIE, WI 53158
OFFICE: (262) 694-1400

COMMUNITY DEVELOPMENT DEPARTMENT:
JEAN WERBIE-HARRIS, DIRECTOR
PLANNER, ZONING ADMINISTRATOR
OFFICE: (262) 925-6718
EMAIL: jwerbie-harris@plprairiewi.com

PEGGY HERRICK
ASSISTANT PLANNER & ZONING ADMINISTRATOR
OFFICE: (262) 925-6716
EMAIL: pherrick@plprairiewi.com

KRISTINA TRANEL
DEPUTY PLANNER & ZONING ADMINISTRATOR
9915 39TH STREET
PLEASANT PRAIRIE, WI 53158
OFFICE: (262) 925-6711
EMAIL: ktranel@plprairiewi.com

ENGINEERING DEPARTMENT:
MATT FINEOUR, P.E.
VILLAGE ENGINEER
OFFICE: (262) 925-6778
EMAIL: mfineour@plprairiewi.com

KURT DAVIDSEN, P.E.
ASSISTANT VILLAGE ENGINEER
OFFICE: (262) 925-6728
EMAIL: kdavidsen@plprairiewi.com

PUBLIC WORKS DEPARTMENT:
JOHN STEINBRINK, JR.,
SUPERINTENDENT
ROGER PRANGE MUNICIPAL BUILDING
8600 GREEN BAY ROAD
OFFICE: (262) 925-6768
EMAIL: jsteinbrink@plprairie.com

JESSE HOULE, P.E.
CONSTRUCTION MANAGER
OFFICE: (262) 948-8945
EMAIL: jhoule@plprairiewi.com

STEVE WLAHOVICH
ENGINEERING TECHNICIAN
OFFICE: (262) 925-6767
EMAIL: swlahovich@plprairie.com

BUILDING INSPECTION DEPARTMENT:
SANDRO PEREZ
BUILDING INSPECTION SUPERINTENDENT
OFFICE: (262) 694-9304
DIRECT: (262) 925-6722
EMAIL: sperez@plprairie.com

DONALD KOEHNE
BUILDING INSPECTOR
OFFICE: (262) 694-9304
EMAIL: dkoehne@plprairiewi.com

MICHAEL KAPRELIAN
BUILDING INSPECTOR
OFFICE: (262) 694-9304
EMAIL: rnichols@plprairiewi.com

FIRE & RESCUE DEPARTMENT:
DOUG McELMURY,
CHIEF OF FIRE & RESCUE
8044 88TH AVENUE
OFFICE: (262) 694-8027
EMAIL: fireandrescue@plprairie.com

CRAIG ROEPKE
DEPUTY CHIEF
DIRECT: (262) 948-8981
EMAIL: croepke@plprairiewi.com

THOMAS CLARK
LIEUTENANT
DIRECT: (262) 948-8982
EMAIL: tclark@plprairiewi.com

WI DEPARTMENT OF NATURAL RESOURCES:
ELAINE JOHNSON
WATER RESOURCE SPECIALIST
OFFICE: 262-884-2136
EMAIL: elaine.johnson@wisconsin.gov

PETER WOOD
WATER RESOURCES ENGINEER
OFFICE: 262-884-2360
EMAIL: peter.wood@wisconsin.gov

GENERAL NOTES

1. THE INTENTION OF THE PLANS AND SPECIFICATIONS IS TO SET FORTH PERFORMANCE AND CONSTRUCTION MATERIAL STANDARDS FOR THE PROPER EXECUTION OF WORK. ALL WORKS CONTAINED WITHIN THE PLANS AND SPECIFICATIONS SHALL BE COMPLETED IN ACCORDANCE WITH ALL REQUIREMENTS FROM LOCAL, STATE, FEDERAL OR OTHER GOVERNING AGENCY'S LAWS, REGULATIONS, JURISDICTIONAL ORDINANCES/CODES/RULES/ETC., AND THE OWNER'S DIRECTION.
2. A GEOTECHNICAL REPORT IS CURRENTLY BEING PREPARRED FOR THE PROJECT SITE. THE DATA ON SUB-SURFACE SOIL CONDITIONS IS NOT INTENDED AS A REPRESENTATION OR WARRANTY OF THE CONTINUITY OF SUCH CONDITIONS BETWEEN BORINGS OR INDICATED SAMPLING LOCATIONS. IT SHALL BE EXPRESSLY UNDERSTOOD THAT OWNER WILL NOT BE RESPONSIBLE FOR ANY INTERPRETATIONS OR CONCLUSIONS DRAWN THERE FROM BY THE CONTRACTOR. DATA IS MADE AVAILABLE FOR THE CONVENIENCE OF THE CONTRACTOR. THE CONTRACTOR IS RESPONSIBLE FOR PERFORMING ANY ADDITIONAL SOILS INVESTIGATIONS THEY FEEL IS NECESSARY FOR THE PROPER EVALUATION OF THE SITE FOR PURPOSES OF PLANNING, BIDDING, OR CONSTRUCTING THE PROJECT AT NO ADDITIONAL COST TO THE OWNER.
3. THE CONTRACTOR IS RESPONSIBLE TO REVIEW AND UNDERSTAND ALL COMPONENTS OF THE PLANS AND SPECIFICATIONS, INCLUDING FIELD VERIFYING SOIL CONDITIONS, PRIOR TO SUBMISSION OF A BID PROPOSAL.
4. THE CONTRACTOR SHALL PROMPTLY REPORT ANY ERRORS OR AMBIGUITIES LEARNED AS PART OF THEIR REVIEW OF PLANS, SPECIFICATIONS, REPORTS AND FIELD INVESTIGATIONS.
5. THE CONTRACTOR IS SOLELY RESPONSIBLE FOR THE COMPUTATION OF QUANTITIES AND WORK REQUIRED TO COMPLETE THIS PROJECT. THE CONTRACTOR'S BID SHALL BE BASED ON ITS OWN COMPUTATIONS AND IN NO SUCH INSTANCE RELY ON THE ENGINEER'S ESTIMATE.
6. QUESTIONS/CLARIFICATIONS WILL BE INTERPRETED BY ENGINEER/OWNER PRIOR TO THE AWARD OF CONTRACT. ENGINEER/OWNER WILL SUBMIT OFFICIAL RESPONSES IN WRITING. INTERPRETATIONS PRESENTED IN OFFICIAL RESPONSES SHALL BE BINDING ON ALL PARTIES ASSOCIATED WITH THE CONTRACT. IN NO WAY SHALL WORD-OF-MOUTH DIALOG CONSTITUTE AN OFFICIAL RESPONSE.
7. PRIOR TO START OF WORK, CONTRACTOR SHALL BE COMPLETELY FAMILIAR WITH ALL CONDITIONS OF THE SITE, AND SHALL ACCOUNT FOR CONDITIONS THAT AFFECT, OR MAY AFFECT CONSTRUCTION INCLUDING, BUT NOT LIMITED TO, LIMITATIONS OF WORK ACCESS, SPACE LIMITATIONS, OVERHEAD OBSTRUCTIONS, TRAFFIC PATTERNS, LOCAL REQUIREMENTS, ADJACENT ACTIVITIES, ETC. FAILURE TO CONSIDER SITE CONDITIONS SHALL NOT BE CAUSE FOR CLAIM OF JOB EXTRAS.
8. COMMENCEMENT OF CONSTRUCTION SHALL EXPLICITLY CONFIRM THAT THE CONTRACTOR HAS REVIEWED THE PLANS AND SPECIFICATIONS IN ENTIRETY AND CERTIFIES THAT THEIR SUBMITTED BID PROPOSAL CONTAINS PROVISIONS TO COMPLETE THE PROJECT, WITH THE EXCEPTION OF UNFORESEEN FIELD CONDITIONS; ALL APPLICABLE PERMITS HAVE BEEN OBTAINED; AND CONTRACTOR UNDERSTANDS ALL OF THE REQUIREMENTS OF THE PROJECT.
9. SHOULD ANY DISCREPANCIES OR CONFLICTS IN THE PLANS OR SPECIFICATIONS BE DISCOVERED AFTER THE AWARD OF CONTRACT, ENGINEER SHALL BE NOTIFIED IN WRITING IMMEDIATELY AND CONSTRUCTION OF ITEMS AFFECTED BY THE DISCREPANCIES/CONFLICTS SHALL NOT COMMENCE, OR CONTINUE, UNTIL A WRITTEN RESPONSE FROM ENGINEER/OWNER IS DISTRIBUTED. IN THE EVENT OF A CONFLICT BETWEEN REFERENCED CODES, STANDARDS, SPECIFICATIONS AND PLANS, THE ONE ESTABLISHING THE MOST STRINGENT REQUIREMENTS SHALL BE FOLLOWED.
10. THE CONTRACTOR SHALL, AT ITS OWN EXPENSE, OBTAIN ALL NECESSARY PERMITS AND LICENSES TO COMPLETE THE PROJECT. OBTAINING PERMITS, OR DELAYS, IS NOT CAUSE FOR DELAY OF THE CONTRACT OR SCHEDULE. CONTRACTOR SHALL COMPLY WITH ALL PERMIT REQUIREMENTS.
11. THE CONTRACTOR SHALL NOTIFY ALL INTERESTED GOVERNING AGENCIES, UTILITY COMPANIES AFFECTED BY THIS CONSTRUCTION PROJECT, AND DIGGER'S HOTLINE IN ADVANCE OF CONSTRUCTION TO COMPLY WITH ALL JURISDICTIONAL ORDINANCES/CODES/RULES/ETC., PERMIT STIPULATIONS, AND OTHER APPLICABLE STANDARDS.
12. SAFETY IS THE SOLE RESPONSIBILITY OF THE CONTRACTOR. THE CONTRACTOR SHALL BE RESPONSIBLE TO INITIATE, INSTITUTE, ENFORCE, MAINTAIN, AND SUPERVISE ALL SAFETY PRECAUTIONS AND JOB SITE SAFETY PROGRAMS IN CONNECTION WITH THE WORK.
13. CONTRACTOR SHALL KEEP THE JOBSITE CLEAN AND ORDERLY AT ALL TIMES. ALL LOCATIONS OF THE SITE SHALL BE KEPT IN A WORKING MANNER SUCH THAT DEBRIS IS REMOVED CONTINUOUSLY AND ALL RESPECTIVE CONTRACTORS OPERATE UNDER GENERAL “GOOD HOUSEKEEPING.”
14. THE CONTRACTOR SHALL INDEMNIFY THE OWNER, ENGINEER, AND THEIR AGENTS FROM ALL LIABILITY INVOLVED WITH THE CONSTRUCTION, INSTALLATION, AND TESTING OF THE WORK ON THIS PROJECT.
15. PRIOR TO CONSTRUCTION, A PRE-CONSTRUCTION CONFRENCE MUST BE HELD AT THE VILLAGE OFFICES. THE PRE-CONSTRUCTION CONFRENCE SHALL BE SCHEDULED AND MODERATED BY THE DESIGN ENGINEER OF RECORD.

INDEX OF SHEETS

C-1	COVER SHEET
C-2	EXISTING CONDITIONS
C-3	SITE DIMENSION & PAVING PLAN
C-4	GRADING PLAN
C-5	UTILITY PLAN
C-6	SITE STABILIZATION PLAN
C-7 - C-9	CONSTRUCTION DETAILS

REQUIRED SUBMITTALS FOR APPROVAL

1. **HOT MIX ASPHALT** - MIX DESIGN
2. **CONCRETE PAVEMENTS (EXTERIOR)** - MIX DESIGN & JOINT PLAN
3. **PAVEMENT STONE BASE COURSE** - GRADATION
4. **PIPE BEDDING & TRENCH BACKFILL** - GRADATION
5. **MANHOLE BACKFILL** - GRADATION
6. **PAVEMENT MARKING PAINT**

REQUIRED SUBMITTALS FOR RECORDS

1. WATER MAIN PIPES, VALVES, HYDRANTS & FITTINGS
2. SANITARY SEWER PIPE & FITTINGS
3. STORM SEWER PIPE, STRUCTURES, & FITTINGS
4. TRACER WIRE
5. UNDERGROUND UTILITY LOCATION RECORD DRAWINGS
6. ADA SIGN & TRUNCATED DOMES, PAINT & STENCILS
7. CHEMICAL SOIL STABILIZATION MIX DESIGN (IF APPLICABLE)

FOR REVIEW ONLY

DIGGERS HOTLINE
Toll Free (800) 242-8511
Milwaukee Area (414) 259-1181
Hearing Impaired TDD (800) 542-2289
www.DiggersHotline.com

PINNACLE ENGINEERING GROUP, LLC
ENGINEER'S LIMITATION

PINNACLE ENGINEERING GROUP, LLC AND THEIR CONSULTANTS DO NOT WARRANT OR GUARANTEE THE ACCURACY AND COMPLETENESS OF THE DELIVERABLES HEREIN BEYOND A REASONABLE DILIGENCE. IF ANY MISTAKES, OMISSIONS, OR DISCREPANCIES ARE FOUND TO EXIST WITHIN THE DELIVERABLES, THE ENGINEER SHALL BE PROMPTLY NOTIFIED PRIOR TO BID SO THAT HE MAY HAVE THE OPPORTUNITY TO TAKE WHATEVER STEPS NECESSARY TO RESOLVE THEM. FAILURE TO PROMPTLY NOTIFY THE ENGINEER OF SUCH CONDITIONS SHALL ABSOLVE THE ENGINEER FROM ANY RESPONSIBILITY FOR THE CONSEQUENCES OF SUCH FAILURE. ACTIONS TAKEN WITHOUT THE KNOWLEDGE AND CONSENT TO THE ENGINEER, OR IN CONTRADICTION TO THE ENGINEER'S DELIVERABLES OR RECOMMENDATIONS, SHALL BECOME THE RESPONSIBILITY NOT OF THE ENGINEER BUT OF THE PARTIES RESPONSIBLE FOR TAKING SUCH ACTION.

FURTHERMORE, PINNACLE ENGINEERING GROUP, LLC IS NOT RESPONSIBLE FOR CONSTRUCTION SAFETY OR THE MEANS AND METHODS OF CONSTRUCTION.

DRAFTED: EP
DESIGNED: DCC
REVIEWED: ####

PLAN I DESIGN I DELIVER
www.pinnacle-engr.com
PINNACLE ENGINEERING GROUP
ENGINEERING I NATURAL RESOURCES I SURVEYING
WISCONSIN OFFICE:
15850 W. BLUEMOUND ROAD
BROOKFIELD, WI 53005
(262) 754-8888
CHICAGO I MILWAUKEE : NATIONWIDE

LAKEVIEW LOT 40
PLEASANT PRAIRIE, WI

COVER SHEET

REVISIONS

PEG JOB No. 559.00A-WI
PEG PM MAC
START DATE 07/11/16
SCALE

SHEET C-1 OF C-9

© COPYRIGHT 2015

COVER SHEET

www.pinnacle-engr.com

THESE PLANS AND DESIGNS ARE COPYRIGHT PROTECTED AND MAY NOT BE USED IN WHOLE OR IN PART WITHOUT THE WRITTEN CONSENT OF PINNACLE ENGINEERING GROUP, LLC

DEMOLITION & CLEARING

1. CONTRACTOR WILL BE RESPONSIBLE FOR ENSURING THAT THE APPROPRIATE GOVERNMENTAL ENTITIES ARE NOTIFIED OF THE WORK AND NECESSARY PERMITS ARE OBTAINED.
2. CONTRACTOR IS RESPONSIBLE FOR REMOVAL OF ITEMS/DEBRIS, CLASSIFICATION, AND PROPER DISPOSAL.(E.G. - ARRANGE FOR ADEQUATE COLLECTION, AND TRANSPORTATION TO DELIVER THE RECOVERED MATERIALS TO THE APPROVED RECYCLING CENTER OR PROCESSING FACILITY). CONTRACTOR SHALL MAINTAIN RECORDS ACCESSIBLE TO THE OWNER AND GOVERNMENT ENTITIES.
3. CONDUCT DEMOLITION OPERATIONS AND REMOVE DEBRIS IN MANNER TO ENSURE MINIMUM INTERFERENCE WITH ROADS, STREETS, WALKS, AND OTHER ADJACENT OCCUPIED OR USED FACILITIES.
4. CONDUCT DEMOLITION OPERATIONS TO PREVENT INJURY TO PEOPLE AND DAMAGE TO ADJACENT BUILDINGS AND FACILITIES DESIGNATED TO REMAIN.
5. PROVIDE TEMPORARY BARRICADES AND OTHER FORMS OF PROTECTION AS REQUIRED FOR SAFETY AND SECURITY.
6. PROVIDE BARRIERS AND APPROPRIATE SIGNS WHERE NECESSARY TO RESTRICT PEDESTRIANS FROM WANDERING INTO CONSTRUCTION AREAS. PROVIDE ACCEPTABLE TEMPORARY SECURITY BARRIERS WHERE PHYSICAL SECURITY OF BUILDINGS OR FENCES IS COMPROMISED DUE TO DEMOLITION WORK.
7. PROVIDE TEMPORARY WEATHER PROTECTION DURING INTERVAL BETWEEN DEMOLITION AND REMOVAL OF EXISTING CONSTRUCTION ON EXTERIOR SURFACES AND INSTALLATION OF NEW CONSTRUCTION TO ENSURE NO WATER LEAKAGE OR DAMAGE OCCURS TO STRUCTURE OR INTERIOR AREAS OF EXISTING BUILDING.
8. ERECT TEMPORARY ENCLOSURES AS NECESSARY TO LIMIT DUST. USE WATER AS NECESSARY TO LAY DUST WHEN CHIPPING, CORING, OR SAWING CONCRETE, MASONRY OR SIMILAR MATERIALS. WATER MUST BE CONTROLLED INSIDE BUILDINGS BY DAMMING, OR OTHER CONTAINMENT METHOD.
9. PROVIDE AND MAINTAIN INTERIOR AND EXTERIOR SHORING, BRACING OR STRUCTURAL SUPPORT TO PRESERVE STABILITY AND PREVENT MOVEMENT, SETTLEMENT, OR COLLAPSE OF STRUCTURES AND ADJACENT FACILITIES THAT ARE NOT PART OF DEMOLITION.
10. PERFORM WORK IN SAFE AND SYSTEMATIC MANNER.
11. WEAR PROPER PERSONAL PROTECTIVE EQUIPMENT AT ALL TIMES.
12. COMPLETELY BACKFILL BELOW-GRADE AREAS AND VOIDS RESULTING FROM UTILITY REMOVAL AND OTHER DEMOLITION WORK WITH CLOSE GRADED AGGREGATE OR COHESIVE STRUCTURAL FILL.
13. REPAIR DEMOLITION PERFORMED IN EXCESS OF THAT REQUIRED.

EXISTING CONDITIONS SURVEY:

EXISTING CONDITIONS SURVEY PROVIDED BY PINNACLE ENGINEERING GROUP. ALTHOUGH PEG HAS NO REASON TO BELIEVE THE SURVEY IS INACCURATE, PEG MAKES NO WARRANTS THAT EXISTING INFORMATION CONTAINED WITHIN THESE PLANS IS ALL-INCLUSIVE OR ACCURATE. CONTRACTOR SHALL UNDERTAKE NECESSARY EFFORTS TO VERIFY THE EXISTING CONDITIONS PRIOR TO THE START OF MATERIAL PROCUREMENT AND CONSTRUCTION EFFORTS/ACTIVITIES.

CONTRACTOR RESPONSIBILITY:

THE INFORMATION SHOWN ON THIS DRAWING CONCERNING TYPE AND LOCATION OF UNDERGROUND UTILITIES IS NOT GUARANTEED TO BE ACCURATE OR ALL INCLUSIVE. THE CONTRACTOR IS RESPONSIBLE FOR MAKING HIS OWN DETERMINATIONS AS TO THE TYPE AND LOCATION OF UNDERGROUND UTILITIES AS MAY BE NECESSARY TO AVOID DAMAGE THERETO. IF ADDITIONAL UTILITIES ARE KNOWN TO EXIST IN THE PROPERTY, THE OWNER WILL PROVIDE EXISTING PLANS OF OTHER UTILITIES SERVING THE SITE AND THE BUILDING THAT OTHERWISE CANNOT BE LOCATED BY A VISUAL OBSERVATION OF THE PROPERTY OR OF WHICH THE SURVEYOR WOULD HAVE NO KNOWLEDGE.

LEGEND

SANITARY MANHOLE		STORM SEWER	
STORM MANHOLE		WATER MAIN	W
CATCH BASIN		LIGHTING	
INLET		ELECTRICAL CABLE	E
PRECAST FLARED END SECTION		ELECTRICAL TRANSFORMER OR PEDESTAL	E
CONCRETE HEADWALL		POWER POLE	
VALVE VAULT		POWER POLE WITH LIGHT	
VALVE BOX		GUY WIRE	
FIRE HYDRANT		STREET SIGN	
BUFFALO BOX		GAS MAIN	G
CLEANOUT		TELEPHONE LINE	T
SANITARY SEWER		CONTOUR	749
FORCE MAIN		TREE WITH TRUNK SIZE	6" 6"
CONCRETE SIDEWALK		EASEMENT LINE	

NORTH

GRAPHICAL SCALE (FEET)

0 1" = 0' 80'

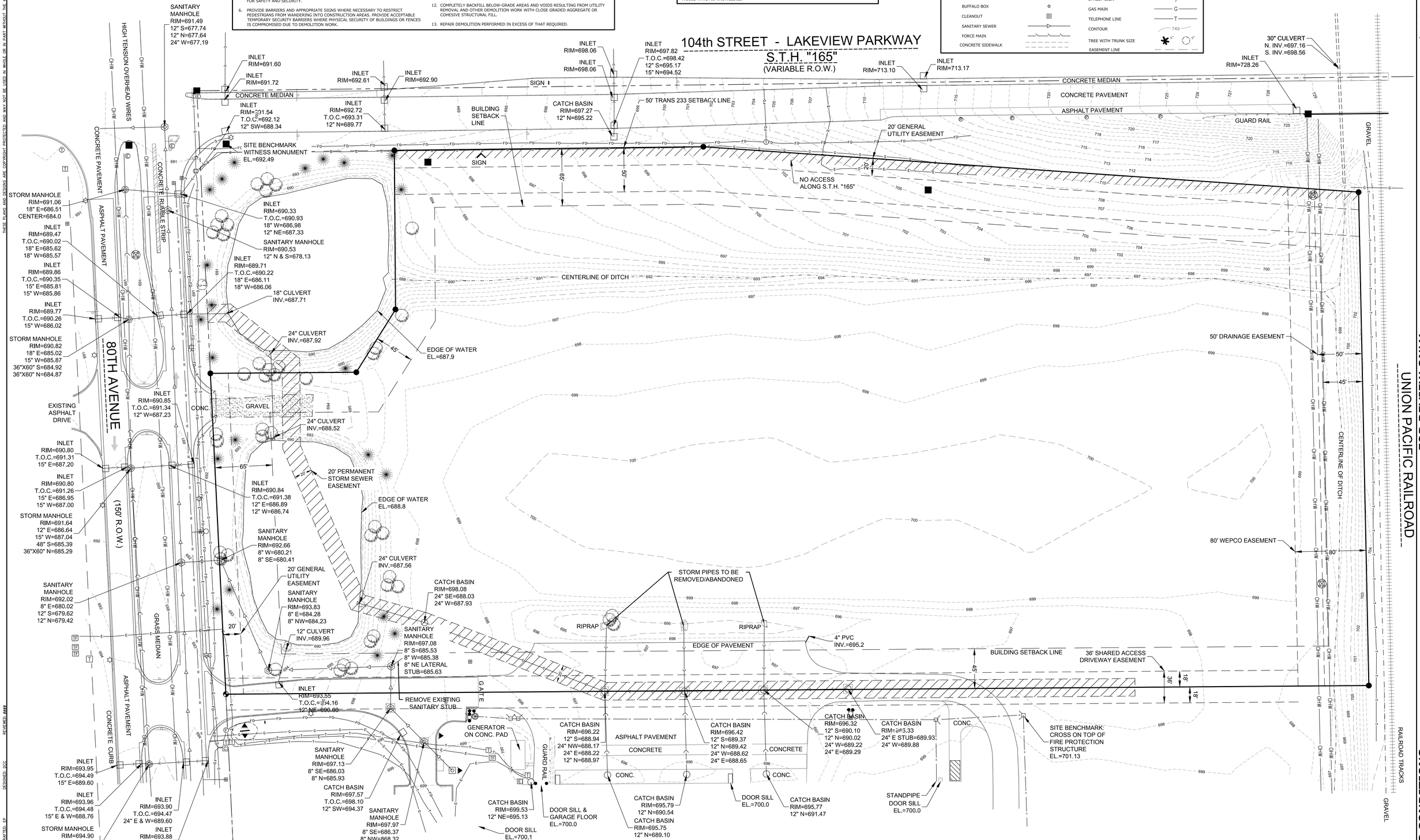

FOR REVIEW ONLY

EXISTING CONDITIONS

www.pinnacle-engr.com

PLAN I DESIGN I DELIVER
www.pinnacle-engr.com

PINNACLE ENGINEERING GROUP
ENGINEERING I NATURAL RESOURCES I SURVEYING

WISCONSIN OFFICE:
15850 W. BLUEMOUND ROAD
BROOKFIELD, WI 53005
(262) 754-8888
CHICAGO I MILWAUKEE NATIONWIDE

LAKEVIEW LOT 40
PLEASANT PRAIRIE, WI

EXISTING CONDITIONS

REVISIONS

PEG JOB NO. 559.00A-WI
PEG PM MSC
START DATE 07/11/16
SCALE 1"=150'

SHEET C-2 of C-9

559.00A-WI-EXISTING

DRAFTED: EP
DESIGNED: DCC
REVIEWED: ####

Z:\PROJECTS\2015\559.00A-WI\CAD\SHEETS\559.00A-WI EXISTING CONDITIONS.DWG

THESE PLANS AND DESIGNS ARE COPYRIGHT PROTECTED AND MAY NOT BE USED IN WHOLE OR IN PART WITHOUT THE WRITTEN CONSENT OF PINNACLE ENGINEERING GROUP, LLC

NOTES

1. ALL DIMENSIONS ARE FACE OF CURB TO FACE OF CURB OR BUILDING FOUNDATION UNLESS NOTED OTHERWISE. ALL UTILITY DIMENSIONS ARE TO OUTSIDE OF PIPE OR CENTER OF STRUCTURE UNLESS OTHERWISE NOTED. ALL PAVING DIMENSIONS ARE TO FACE OF CURB OR TO EDGE OF PAVEMENT; EXCEPT FOR THE SETBACK FROM PARKING LOTS, MANEUVERING LANES AND FIRE ACCESS LANES, WHERE THE SETBACK IS MEASURED FROM THE BACK OF CURB TO THE PROPERTY LINE.
2. ALL PROPOSED CURB AND GUTTER SHALL BE 18" STANDARD CURB AND GUTTER (SEE DETAIL), UNLESS OTHERWISE NOTED. CURB AND GUTTER DRAINING AWAY FROM THE FACE OF CURB IS NOTED AS REVERSE CURB AND GUTTER.
3. BUILDING DIMENSIONS AND ADJACENT PARKING AND UTILITY LAYOUT HAVE BEEN PREPARED BASED UPON ARCHITECTURAL INFORMATION CURRENT AT THE DATE OF THIS DRAWING. SUBSEQUENT ARCHITECTURAL CHANGES MAY EXIST. THEREFORE CONTRACTOR SHALL REFER TO ARCHITECTURAL PLANS FOR PRECISE BUILDING DIMENSIONS AND EXACT UTILITY ENTRANCE LOCATIONS AND NOTIFY THE ARCHITECT AND ENGINEER OF ANY DISCREPANCIES PRIOR TO CONSTRUCTION.
4. THE CONTRACTOR SHALL CONTACT DIGGERS HOTLINE (1-800-242-8511) PRIOR TO ANY WORK TO LOCATE UTILITIES AND SHALL CONTACT THE OWNER SHOULD UTILITIES APPEAR TO BE IN CONFLICT WITH THE PROPOSED IMPROVEMENT.
5. IMPROVEMENTS ADJACENT TO BUILDING IF SHOWN SUCH AS TRUCK DOCK, RETAINING WALLS, SIDEWALKS, CURBING, FENCES, CANOPIES, RAMPS, HANDICAP ACCESS, PLANTERS, DUMPSTERS, AND TRANSFORMERS ETC. HAVE BEEN SHOWN FOR APPROXIMATE LOCATION ONLY. REFER TO ARCHITECTURAL PLANS FOR EXACT LOCATIONS, SPECIFICATIONS, AND DETAILS.
6. REFER TO ELECTRICAL PLANS FOR LIGHTING LOCATIONS, SPECIFICATIONS, AND DETAILS.
7. SEE ADDITIONAL NOTES AND DETAILS ON SITE DIMENSIONAL PLANS AND CONSTRUCTION DETAILS.
8. ALL PAVING SHALL CONFORM TO STATE OF WISCONSIN STANDARD SPECIFICATIONS FOR HIGHWAY & STRUCTURE CONSTRUCTION AND APPLICABLE VILLAGE OF PLEASANT PRAIRIE ORDINANCES, AND SPECIFICATIONS CONTAINED WITHIN THIS PLAN SET.
9. CONTRACTOR SHALL CONSULT STRIPING COLOR WITH OWNER PRIOR TO CONSTRUCTION.
10. PROVIDE CONTRACTOR GRADE ACRYLIC, STRIPING PAINT FOR NEW ASPHALT OR COATED ASPHALT. APPLY MARKING PAINT AT A RATE OF ONE (1) GALLON PER THREE TO FOUR HUNDRED (300-400) LINEAL FEET OF FOUR (4) INCH WIDE STRIPES OR TO MANUFACTURER'S SPECIFICATION, WHICHEVER IS GREATER.
11. THOROUGHLY CLEAN SURFACES FREE OF DIRT, SAND, GRAVEL, OIL AND OTHER FOREIGN MATTER. CONTRACTOR RESPONSIBLE TO INSPECT EXISTING PAVEMENT SURFACES FOR CONDITIONS AND DEFECTS THAT WILL ADVERSELY AFFECT QUALITY OF WORK, AND WHICH CANNOT BE PUT INTO AN ACCEPTABLE CONDITION THROUGH NORMAL PREPARATORY WORK AS SPECIFIED.
12. DO NOT PLACE MARKING OVER UNSOUND PAVEMENTS. IF THESE CONDITIONS EXIST, NOTIFY OWNER. STARTING INSTALLATION CONSTITUTES CONTRACTOR'S ACCEPTANCE OF SURFACE AS SUITABLE FOR INSTALLATION.
13. LAYOUT MARKINGS USING GUIDE LINES, TEMPLATES AND FORMS. STENCILS AND TEMPLATES SHALL BE PROFESSIONALLY MADE TO INDUSTRY STANDARDS. "FREE HAND" PAINTING OF ARROWS, SYMBOLS, OR WORDING SHALL NOT BE ALLOWED. APPLY STRIPES STRAIGHT AND EVEN.
14. PROTECT ADJACENT CURBS, WALKS, FENCES, AND OTHER ITEMS FROM RECEIVING PAINT.
15. BARRICADE MARKED AREAS DURING INSTALLATION AND UNTIL THE MARKING PAINT IS DRIED AND READY FOR TRAFFIC.
16. ASPHALTIC CONCRETE PAVING SPECIFICATIONS-

CODES AND STANDARDS: THE PLACING, CONSTRUCTION AND COMPOSITION OF THE ASPHALTIC BASE COURSE AND ASPHALTIC CONCRETE SURFACING SHALL BE IN ACCORDANCE WITH THE REQUIREMENTS OF SECTIONS 450, 455, 460 AND 465 OF THE STATE OF WISCONSIN STANDARD SPECIFICATIONS FOR HIGHWAY AND STRUCTURE CONSTRUCTION, EDITION OF 2005. HEREAFTER, THIS PUBLICATION WILL BE REFERRED TO AS THE STATE HIGHWAY SPECIFICATIONS.

WEATHER LIMITATIONS: APPLY TACK COATS WHEN AMBIENT TEMPERATURE IS ABOVE 50° F (10° C) AND WHEN TEMPERATURE HAS NOT BEEN BELOW 35° F (1° C) FOR 12 HOURS IMMEDIATELY PRIOR TO APPLICATION. DO NOT APPLY WHEN BASE IS WET OR CONTAINS EXCESS OF MOISTURE. CONSTRUCT ASPHALTIC CONCRETE SURFACE COURSE WHEN ATMOSPHERIC TEMPERATURE IS ABOVE 40° (4°C) AND WHEN BASE IS DRY AND WHEN WEATHER IS NOT RAINY. BASE COURSE MAY BE PLACED WHEN AIR TEMPERATURE IS ABOVE 30° F (-1° C).

GRADE CONTROL: ESTABLISH AND MAINTAIN REQUIRED LINES AND ELEVATIONS FOR EACH COURSE DURING CONSTRUCTION.

CRUSHED AGGREGATE BASE COURSE: THE TOP LAYER OF BASE COURSE SHALL CONFORM TO SECTIONS 301 AND 305, STATE HIGHWAY SPECIFICATIONS.

BINDER COURSE AGGREGATE: THE AGGREGATE FOR THE BINDER COURSE HALL CONFORM TO SECTIONS 460.2.7 AND 315, STATE HIGHWAY SPECIFICATIONS.

SURFACE COURSE AGGREGATE: THE AGGREGATE FOR THE SURFACE COURSE SHALL CONFORM TO SECTIONS 460.2.7 AND 465, STATE HIGHWAY SPECIFICATIONS.

ASPHALTIC MATERIALS: THE ASPHALTIC MATERIALS SHALL CONFORM TO SECTION 455 AND 460, STATE HIGHWAY SPECIFICATIONS.

SURFACE PREPARATION: NOTIFY CONTRACTOR OF UNSATISFACTORY CONDITIONS. DO NOT BEGIN PAVING WORK UNTIL DEFICIENT SUBBASE AREAS HAVE BEEN CORRECTED AND ARE READY TO RECEIVE PAVING.

LEGEND

- LIGHT DUTY PAVEMENT
- HEAVY DUTY PAVEMENT
- CONCRETE PAVEMENT (TRUCK DOCKS & DOLLY PADS)
- CONCRETE SIDEWALK
- (A) 4" SOLID WHITE STRIPE
- (B) 4" DIAGONAL AT 45° SPACED 2' O.C.
- (C) R7-8 HANDICAP PARKING SIGN (SEE DETAIL)
- (D) TAPER CURB HEAD (SEE DETAIL)
- (E) 18" CURB & GUTTER (SEE DETAIL)
- (F) REVERSE 18" CURB & GUTTER (SEE DETAIL)
- (G) 5.0' WIDE CONCRETE SIDEWALK (SEE DETAIL)
- (H) BUILDING DOOR SLAB (2% MAX SLOPE WITHIN DRIVE IN OR MAN DOOR)
- (I) STEEL STAIRS (SEE ARCHITECHTURAL PLANS)
- (J) CONCRETE SLOPE PAVING
- PARKING COUNT- NOT TO BE PAINTED
- MAN DOOR
- DID OVERHEAD DOOR

EXISTING CONDITIONS SURVEY:

EXISTING CONDITIONS SURVEY PROVIDED BY PINNACLE ENGINEERING GROUP. ALTHOUGH PEG HAS NO REASON TO BELIEVE THE SURVEY IS INACCURATE, PEG MAKES NO WARRANTS THAT EXISTING INFORMATION CONTAINED WITHIN THESE PLANS IS ALL-INCLUSIVE OR ACCURATE. CONTRACTOR SHALL UNDERTAKE NECESSARY EFFORTS TO VERIFY THE EXISTING CONDITIONS PRIOR TO THE START OF MATERIAL PROCUREMENT AND CONSTRUCTION EFFORTS/ACTIVITIES.

NORTH

GRAPHICAL SCALE (FEET)

0 1" = 0' 80'

SITE DATA

SITE AREA:	16.7 AC
DISTURBED AREA:	10.9 AC
BUILDING FOOTPRINT AREA:	4.1 AC (178,273 S.F.)
ADDED CAR PARKING SPACES:	206 SPACES (7 A.D.A.)
ADDED TRUCK DOCK SPACES:	25
PAVEMENT AREA:	3.1 AC
PAVEMENT AREA (WITH FUTURE EXPANSION):	4.6 AC
IMPERVIOUS AREA:	7.2 AC
IMPERVIOUS AREA (WITH FUTURE EXPANSION):	12.6 AC
GREEN SPACE:	9.5 AC (57%)
GREEN SPACE (WITH FUTURE EXPANSION):	4.1 AC (25%)
ZONING DISTRICT:	M-2
(PLEASANT PRAIRIE)	

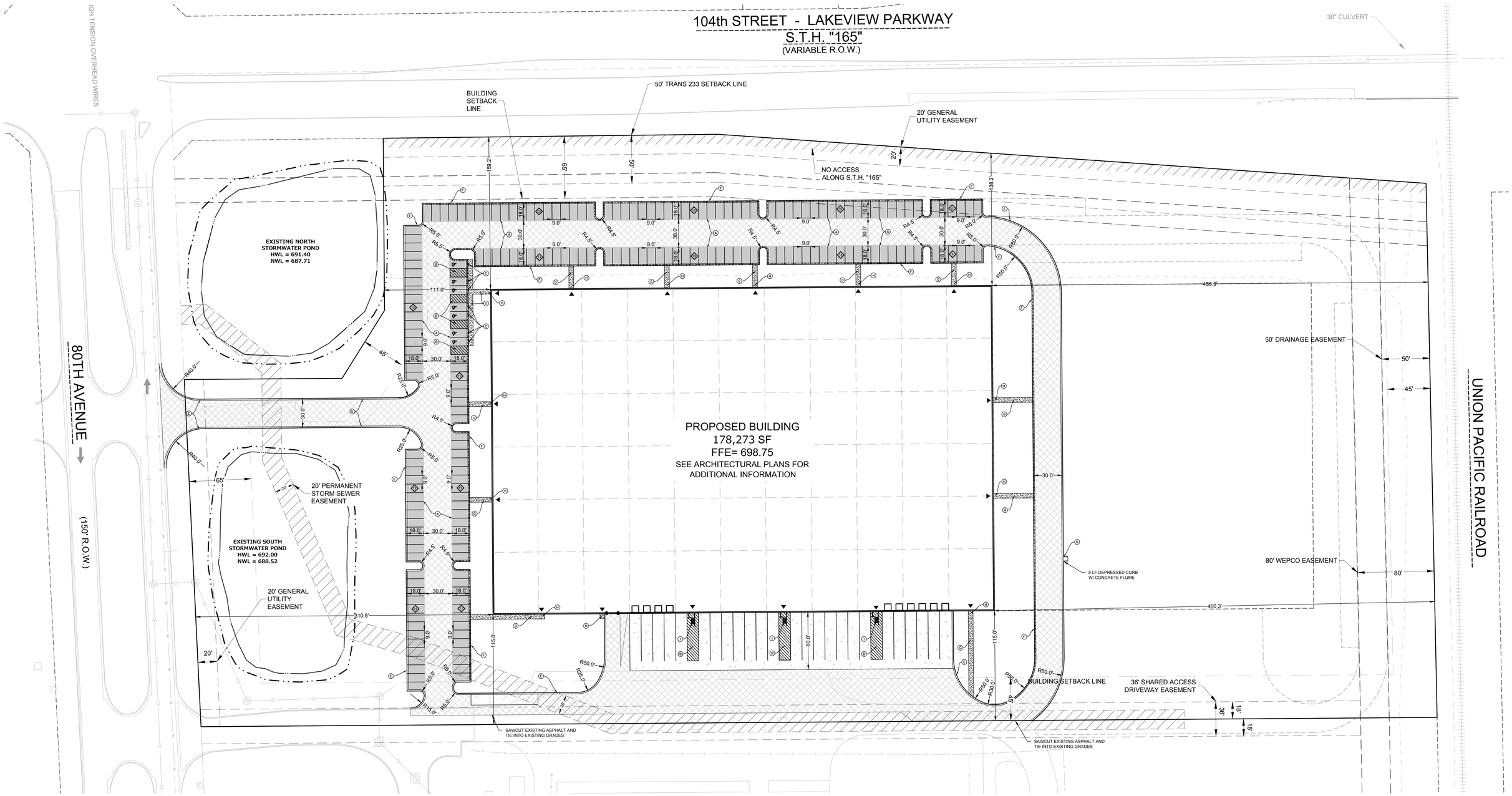

FOR REVIEW ONLY

SITE DIMENSION & PAVING PLAN

www.pinnacle-engr.com

DRAFTED: EP DESIGNED: DCC REVIEWED: ###

PLAN I DESIGN I DELIVER
www.pinnacle-engr.com

PINNACLE ENGINEERING GROUP
ENGINEERING I NATURAL RESOURCES I SURVEYING

WISCONSIN OFFICE: 15850 W. BLUEMOUND ROAD BROOKFIELD, WI 53005 (262) 754-8888
CHICAGO I MILWAUKEE : NATIONWIDE

LAKEVIEW LOT 40
PLEASANT PRAIRIE, WI

SITE DIMENSION & PAVING PLAN

REVISIONS

PEG JOB No. 559.00A-WI
PEG PM MAC
START DATE 07/11/16
SCALE 1"=100'

SHEET C-3 & C-9

© COPYRIGHT 2016

Z:\PROJECTS\2015\559.00A-WI\CAD\SHEETS\559.00A-WI SITE DIMENSION & PAVING PLAN.DWG

THESE PLANS AND DESIGNS ARE COPYRIGHT PROTECTED AND MAY NOT BE USED IN WHOLE OR IN PART WITHOUT THE WRITTEN CONSENT OF PINNACLE ENGINEERING GROUP, LLC

NOTES

1. CONTRACTOR SHALL VERIFY ALL GRADES, ENSURE ALL AREAS DRAIN PROPERLY AND REPORT ANY DISCREPANCIES TO PINNACLE ENGINEERING GROUP PRIOR TO THE START OF ANY CONSTRUCTION ACTIVITIES.
2. ALL EXISTING CONTOURS REPRESENT EXISTING SURFACE GRADES UNLESS OTHERWISE NOTED. ALL PROPOSED GRADES SHOWN ARE FINISH SURFACE GRADES UNLESS OTHERWISE NOTED.
3. SPOT ELEVATIONS REPRESENT THE GRADE ALONG THE CURB & GUTTER FLOWLINE UNLESS OTHERWISE NOTED.
4. ALL EXCAVATIONS AND MATERIAL PLACEMENT SHALL BE COMPLETED TO DESIGN ELEVATIONS AS DEPICTED IN THE PLANS.

   CONTRACTOR SHALL ASSUME SOLE RESPONSIBILITY FOR THE COMPUTATION(S) OF ALL GRADING QUANTITIES. WHILE PEG ATTEMPTS TO PROVIDE A COST EFFECTIVE APPROACH TO BALANCE EARTHWORK, GRADING DESIGN IS BASED ON MANY FACTORS, INCLUDING SAFETY, AESTHETICS, AND COMMON ENGINEERING STANDARD OF CARE, THEREFORE NO GUARANTEE CAN BE MADE FOR A BALANCED SITE.

   THE CONTRACTOR MAY SOLICIT APPROVAL FROM ENGINEER/OWNER TO ADJUST FINAL GRADES FROM DESIGN GRADES TO PROVIDE AN OVERALL SITE BALANCE AS A RESULT OF FIELD CONDITIONS.
5. GRADING ACTIVITIES SHALL BE IN A MANNER TO ALLOW POSITIVE DRAINAGE ACROSS DISTURBED SOILS, WHICH MAY INCLUDE EXCAVATION OF TEMPORARY DITCHES TO PREVENT PONDING, AND IF NECESSARY PUMPING TO ALLEVIATE PONDING. CONTRACTOR SHALL PREVENT SURFACE WATER FROM ENTERING INTO EXCAVATIONS. IN NO WAY SHALL OWNER BE RESPONSIBLE FOR REMEDIATION OF UNSUITABLE SOILS CREATED/ORIGINATED AS A RESULT OF IMPROPER SITE GRADING OR SEQUENCING. CONTRACTOR SHALL SEQUENCE GRADING ACTIVITIES TO LIMIT EXPOSURE OF DISTURBED SOILS DUE TO WEATHER.
6. THE CONTRACTOR IS RESPONSIBLE FOR MEETING MINIMUM COMPACTION STANDARDS. THE CONTRACTOR SHALL NOTIFY ENGINEER/OWNER IF PROPER COMPACTION CANNOT BE OBTAINED. THE PROJECT'S GEOTECHNICAL CONSULTANT SHALL DETERMINE WHICH IN-SITU SOILS ARE TO BE CONSIDERED UNSUITABLE SOILS. THE ENGINEER/OWNER AND GEOTECHNICAL TESTING CONSULTANT WILL DETERMINE IF REMEDIAL MEASURES WILL BE NECESSARY.
7. IN THE EVENT THAT ANY MOISTURE-DENSITY TEST(S) FAIL TO MEET SPECIFICATION REQUIREMENTS, THE CONTRACTOR SHALL PERFORM CORRECTIVE WORK AS NECESSARY TO BRING THE MATERIAL INTO COMPLIANCE AND RETEST THE FAILED AREA AT NO COST TO THE OWNER.
8. WITH THE AUTHORIZATION OF THE ENGINEER/OWNER, MATERIAL THAT IS TOO WET TO PERMIT PROPER COMPACTION MAY BE SPREAD ON FILL AREAS IN AN EFFORT TO DRY. CONTRACTOR SHALL CLEARLY FIELD MARK THE EXTERIOR LIMITS OF SPREAD MATERIAL WITH PAINTED LATH AND SUBMIT A PLAN TO THE ENGINEER/OWNER THAT IDENTIFIES THE LIMITS. UNDER NO CONDITION SHALL THE SPREAD MATERIAL DEPTH EXCEED THE MOST RESTRICTIVE OF: THE EFFECTIVE TREATMENT DEPTH OF MACHINERY THAT WILL BE USED TO TURNOVER THE SPREAD MATERIAL; OR THE MAXIMUM COMPACTION LIFT DEPTH.
9. THE CONTRACTOR SHALL IMMEDIATELY NOTIFY ENGINEER/OWNER IF GROUNDWATER IS ENCOUNTERED DURING EXCAVATION.
10. CONTRACTOR IS SOLELY RESPONSIBLE FOR THE DESIGN AND CONSTRUCTION OF ADEQUATE AND SAFE TEMPORARY SHORING, BRACING, RETENTION STRUCTURES, AND EXCAVATIONS.
11. THE SITE SHALL BE COMPLETED TO WITHIN 0.10-FT (+/-) OF THE PROPOSED GRADES AS INDICATED WITHIN THE PLANS PRIOR TO PLACEMENT OF TOPSOIL OR STONE. CONTRACTOR IS ENCOURAGED TO SEQUENCE CONSTRUCTION SUCH THAT THE SITE IS DIVIDED INTO SMALLER AREAS TO ALLOW STABILIZATION OF DISTURBED SOILS IMMEDIATELY UPON COMPLETION OF INDIVIDUAL SMALLER AREAS.
12. CONTRACTOR SHALL CONTACT "DIGGER'S HOTLINE" FOR LOCATIONS OF ALL EXISTING UTILITIES PRIOR TO COMMENCEMENT OF ANY CONSTRUCTION ACTIVITIES AND SHALL BE RESPONSIBLE FOR PROTECTING SAID UTILITIES FROM ANY DAMAGE DURING CONSTRUCTION.
13. CONTRACTOR SHALL PROTECT INLETS AND ADJACENT PROPERTIES WITH SILT FENCING OR APPROVED EROSION CONTROL METHODS UNTIL CONSTRUCTION IS COMPLETED. CONTRACTOR SHALL PLACE SILT FENCING AT DOWN SLOPE SIDE OF GRADING LIMITS.
14. CONTRACTOR SHALL BE RESPONSIBLE FOR DAMAGE TO ANY EXISTING FACILITIES OR UTILITIES. ANY DAMAGE SHALL BE REPAIRED TO THE OWNER'S SATISFACTION AT THE EXPENSE OF THE CONTRACTOR.
15. WORK WITHIN ANY ROADWAY RIGHT-OF-WAY SHALL BE COORDINATED WITH THE APPROPRIATE MUNICIPAL OFFICIAL PRIOR TO COMMENCEMENT OF ANY CONSTRUCTION ACTIVITIES. CONTRACTOR SHALL BE RESPONSIBLE FOR OBTAINING ALL NECESSARY PERMITS AND FEES. GRADING WITHIN RIGHT-OF-WAY IS SUBJECT TO APPROVAL BY SAID OFFICIALS. RESTORATION OF RIGHT-OF-WAY IS CONSIDERED INCIDENTAL AND SHALL BE INCLUDED IN THE COST OF GRADING. RESTORATION SHALL INCLUDE ALL ITEMS NECESSARY TO RESTORE RIGHT-OF-WAY IN-KIND INCLUDING LANDSCAPING.
16. CONTRACTOR SHALL COMPLY WITH ALL TOWN OF SOMERS CONSTRUCTION STANDARDS/ORDINANCES.
17. LANDSCAPE AND TURF AREAS SHALL HAVE A MINIMUM OF 4-INCH TOPSOIL REPLACEMENT.
18. TOPSOIL BERMING SHALL ACHIEVE 90% STANDARD PROCTOR DENSITY AT 3%(±) OPTIMUM MOISTURE CONTENT.
19. SURVEY BENCHMARKS AND MAPPING HAS BEEN PROVIDED BY PINNACLE ENGINEERING GROUP. IN NO WAY DOES PEG WARRANT THE BASEMAP IS ALL INCLUSIVE OR REPRESENTATIVE OF ACTUAL CONDITIONS. CONTRACTOR SHALL PROVIDE CHECKS AS NECESSARY TO VERIFY THE BASEMAP CONTENT AND ACCURACY.

LEGEND

- STORM SEWER MANHOLE
- STORM SEWER CATCH BASIN - ROUND CASTING
- STORM SEWER CATCH BASIN - RECTANGULAR CASTING
- PROPOSED END SECTION
- 749 PROPOSED CONTOUR
- 750.00 SPOT ELEVATION
- DIRECTION OF SURFACE FLOW
- DITCH OR SWALE
- OVERFLOW RELIEF ROUTING
- CURB AND GUTTER
- DEPRESSED CURB
- REVERSE PITCH CURB & GUTTER

EXISTING CONDITIONS SURVEY:

EXISTING CONDITIONS SURVEY PROVIDED BY PINNACLE ENGINEERING GROUP. ALTHOUGH PEG HAS NO REASON TO BELIEVE THE SURVEY IS INACCURATE, PEG MAKES NO WARRANTS THAT EXISTING INFORMATION CONTAINED WITHIN THESE PLANS IS ALL-INCLUSIVE OR ACCURATE. CONTRACTOR SHALL UNDERTAKE NECESSARY EFFORTS TO VERIFY THE EXISTING CONDITIONS PRIOR TO THE START OF MATERIAL PROCUREMENT AND CONSTRUCTION EFFORTS/ACTIVITIES.

NORTH

GRAPHICAL SCALE (FEET)

0 1" = 0' 80'

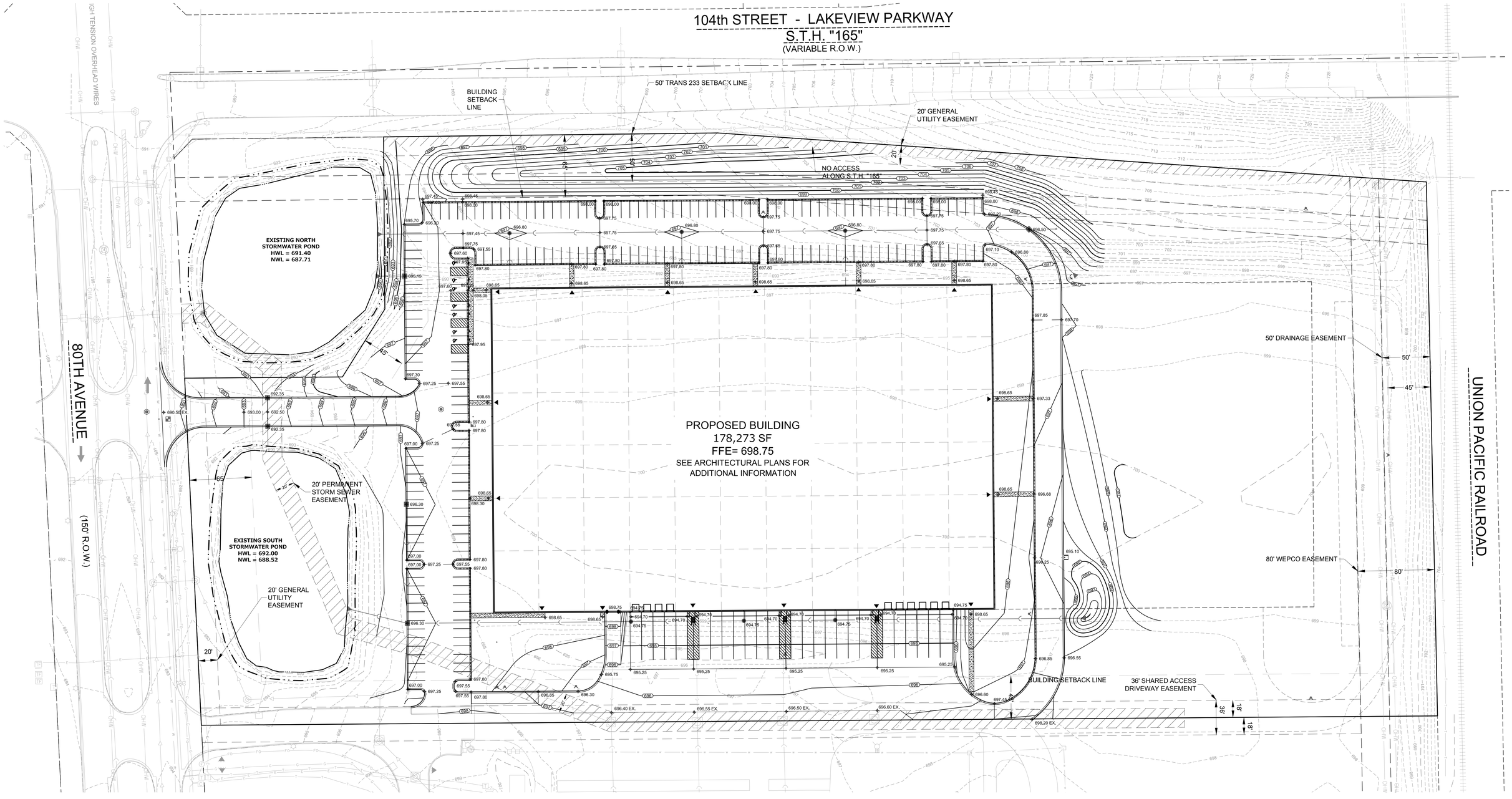

www.pinnacle-engr.com

FOR REVIEW ONLY

GRADING PLAN

REVIEWED: AJS
DESIGNED: DCC
DRAFTED: EP

PLAN | DESIGN | DELIVER
www.pinnacle-engr.com

PINNACLE ENGINEERING GROUP
ENGINEERING | NATURAL RESOURCES | SURVEYING

WISCONSIN OFFICE:
15850 W. BLUEMOUND ROAD
BROOKFIELD, WI 53005
(262) 754-8888
CHICAGO | MILWAUKEE | NATIONWIDE

LAKEVIEW LOT 40
PLEASANT PRAIRIE, WI

GRADING PLAN

REVISIONS

PEG JOB No. 559.00A-WI
PEG PM MAC
START DATE 07/11/16
SCALE 1"=100'

SHEET C-4 of C-9

© COPYRIGHT 2016

Z:\PROJECTS\2015\559.00A-WI\CAD\SHEETS\559.00A-WI GRADING PLAN.DWG

THESE PLANS AND DESIGNS ARE COPYRIGHT PROTECTED AND MAY NOT BE USED IN WHOLE OR IN PART WITHOUT THE WRITTEN CONSENT OF PINNACLE ENGINEERING GROUP, LLC

NOTES

1. EXISTING UTILITIES ARE SHOWN FOR INFORMATIONAL PURPOSES ONLY AND ARE NOT GUARANTEED TO BE ACCURATE OR ALL INCLUSIVE. CONTRACTOR IS RESPONSIBLE FOR VERIFYING THE TYPE, LOCATION, SIZE AND ELEVATION OF UNDERGROUND UTILITIES AS THEY DEEM NECESSARY FOR PROPOSED UTILITY CONNECTIONS AND/OR TO AVOID DAMAGE THERETO. CONTRACTOR SHALL CALL "DIGGER'S HOTLINE" PRIOR TO ANY CONSTRUCTION.
2. ALL UTILITY WORK SHALL BE DONE IN ACCORDANCE WITH THE STANDARD SPECIFICATIONS FOR SEWER AND WATER CONSTRUCTION IN WISCONSIN (LATEST EDITION AND ADDENDUM) AND ALL STATE AND LOCAL CODES AND SPECIFICATIONS. IT IS THE CONTRACTORS RESPONSIBILITY TO DETERMINE WHICH SPECIFICATIONS AND CODES APPLY, AND TO COORDINATE ALL CONSTRUCTION ACTIVITIES WITH THE APPROPRIATE LOCAL AND STATE AUTHORITIES.
3. UTILITY CONSTRUCTION AND SPECIFICATIONS SHALL COMPLY WITH THE TOWN OF SOMERS SPECIAL PROVISIONS AND WISCONSIN DEPARTMENT OF SAFETY AND PROFESSIONAL SERVICES COMM 82.
4. LENGTHS OF PROPOSED UTILITIES ARE TO CENTER OF STRUCTURES OR FITTINGS AND MAY VARY SLIGHTLY FROM PLAN. LENGTHS ARE SHOWN FOR CONTRACTOR CONVENIENCE ONLY. CONTRACTOR IS SOLELY RESPONSIBLE FOR COMPUTATIONS OF MATERIALS REQUIRED TO COMPLETE WORK. LENGTHS SHALL BE FIELD VERIFIED DURING CONSTRUCTION.
5. CONTRACTOR SHALL ADJUST AND/OR RECONSTRUCT EXISTING UTILITY COVERS (SUCH AS MANHOLE COVERS, VALVE BOX COVERS, ETC.) TO MATCH FINISHED GRADES OF THE AREAS DISTURBED DURING CONSTRUCTION.
6. CONTRACTOR SHALL FIELD VERIFY LOCATIONS, ELEVATIONS, AND SIZES OF PROPOSED UTILITIES AND CHECK ALL UTILITY CROSSINGS FOR CONFLICTS PRIOR TO ATTEMPTING CONNECTIONS AND BEGINNING UTILITY CONSTRUCTION AND NOTIFY THE OWNER OF ANY DISCREPANCIES OR CONFLICTS.
7. ALL NEW ON-SITE SANITARY, STORM AND WATER UTILITIES SHALL BE PRIVATELY OWNED AND MAINTAINED BY THE PROPERTY OWNER.
8. THE CONTRACTOR SHALL CONTACT THE VILLAGE OF PLEASANT PRAIRIE PUBLIC WORKS DEPARTMENT 48-HOURS IN ADVANCE OF SANITARY, WATER AND STORM CONNECTIONS TO THE VILLAGE-OWNED SYSTEM TO SCHEDULE INSPECTIONS.
9. ROUTING OF GAS, ELECTRIC AND TELEPHONE SERVICES ARE SHOWN ON THE ARCHITECTURAL PLANS AND SUBJECT TO CHANGE BASED UPON FINAL REVIEW AND APPROVAL BY RESPECTIVE UTILITY COMPANIES AND OWNER. CONTRACTOR SHALL CONTACT EACH UTILITY COMPANY AND COORDINATE FINAL LOCATIONS FOR ALL UTILITY SERVICES PRIOR TO START OF CONSTRUCTION.
10. IT IS THE CONTRACTOR'S RESPONSIBILITY TO COORDINATE WITH THE PROPER AUTHORITIES FOR ANY REQUIRED PERMITS, AUTHORIZATIONS, TRAFFIC CONTROL AND ANY PERMIT FEES REQUIRED.
11. FIELD TILE CONNECTION - ALL FIELD TILE ENCOUNTERED DURING CONSTRUCTION SHALL BE INCLUDED IN THE UNIT PRICE(S) FOR STORM SEWER. TILE LINES CROSSED BY THE TRENCH SHALL BE REPLACED WITH THE SAME MATERIAL AS THE STORM SEWER.
12. THE CONTRACTOR IS RESPONSIBLE FOR THE SIZE, TYPE AND NUMBER OF WATER MAIN BENDS, HORIZONTAL AND VERTICAL, REQUIRED TO COMPLETE CONSTRUCTION. COST FOR BENDS, HORIZONTAL AND VERTICAL, SHALL BE INCIDENTAL AND INCLUDED IN THE OVERALL COST OF THE CONTRACT.
13. STORM SEWER SPECIFICATIONS -

    PIPE - REINFORCED CONCRETE PIPE (RCP) SHALL MEET THE REQUIREMENTS OF ASTM CLASS C-76 WITH RUBBER GASKET JOINTS CONFORMING TO ASTM C-443. STRENGTH CLASSIFICATIONS SHALL BE IN ACCORDANCE WITH THE FOLLOWING:

HEIGHT OF COVER (FEET):	0-2	2-3	3-6	6-15	15-25	25+
MINIMUM CONCRETE PIPE CLASSIFICATION:	IV	III	II	III	IV	ENGINEER TO SPECIFY

    HIGH DENSITY DUAL-WALL POLYETHYLENE N-12 CORRUGATED PIPE (HDPE) SHALL BE AS MANUFACTURED BY ADS OR EQUAL WITH WATER TIGHT JOINTS, AND SHALL MEET THE REQUIREMENTS OF AASHTO DESIGNATION M-294 TYPE "S", OR POLYVINYL CHLORIDE (PVC) - CLASS PS46 MEETING AASHTO M278, AS NOTED. IF HDPE PIPE IS USED FOR POND OUTFALLS, A MINIMUM OF THREE (3) SECTIONS (2 STRAPS) SHALL BE STRAPPED TOGETHER.

    INLETS/CATCH BASINS - INLETS/CATCH BASINS SHALL BE CONSTRUCTED IN ACCORDANCE WITH FILE NO. 25 OF THE "STANDARD SPECIFICATIONS" WITH A 1'-8" X 2'-6" MAXIMUM OPENING. FRAME & GRATE SHALL BE NEENAH R-1580 WITH TYPE G GRATE, OR EQUAL. CURB FRAME & GRATE SHALL BE NEENAH R-3067, OR EQUAL. THE SUMP DEPTH (VERTICAL DISTANCE FROM THE BASE OF THE STRUCTURE TO OUTFALL INVERT OF THE PIPE) SHALL BE 18" MIN. STRUCTURE SHOP DRAWINGS SHALL BE SUBMITTED TO PINNACLE ENGINEERING GROUP FOR REVIEW AND APPROVAL PRIOR TO MANUFACTURING AND INSTALLATION.

    BACKFILL AND BEDDING - STORM SEWER SHALL BE CONSTRUCTED WITH GRAVEL BACKFILL AND CLASS "B" BEDDING IN ALL PAVED AREAS AND TO A POINT 5 FEET BEYOND THE EDGE OF PAVEMENT. TRENCHES RUNNING PARALLEL TO AND LESS THAN 5 FEET FROM THE EDGE OF PAVEMENT SHALL ALSO REQUIRE GRAVEL BACKFILL. LANDSCAPED AREAS MAY BE BACKFILLED WITH EXCAVATED MATERIAL IN CONFORMANCE WITH SECTION 8.43.5 OF THE "STANDARD SPECIFICATIONS".
    MANHOLE FRAMES AND COVERS - MANHOLE FRAMES AND COVERS SHALL BE NEENAH R-1642 WITH TYPE "B" SELF SEALING LIDS, NON-ROCKING OR EQUAL .

    IF HDPE PIPE IS USED FOR POND OUTFALLS, A MINIMUM OF THREE (3) SECTIONS (2 STRAPS) SHALL BE STRAPPED TOGETHER.

16. WATER MAIN SPECIFICATIONS -

    PIPE - WATER MAIN SHALL BE POLYVINYL CHLORIDE (PVC) PIPE MEETING THE REQUIREMENTS OF AWWA STANDARD C-900, CLASS 150, DR-18, WITH CAST IRON O.D. AND INTEGRAL ELASTOMERIC BELL AND SPIGOT JOINTS. VALVES AND VALVE BOXES - GATE VALVES SHALL BE AWWA GATE VALVES MEETING THE REQUIREMENTS OF AWWA C-500 AND CHAPTER 8.27.0 OF THE "STANDARD SPECIFICATIONS". GATE VALVES AND VALVE BOXES SHALL CONFORM TO LOCAL PLUMBING ORDINANCES.

    HYDRANTS - HYDRANTS SHALL CONFORM TO THE SPECIFICATIONS OF THE AND IN ACCORDANCE WITH FILE NO. 38 OF THE "STANDARD SPECIFICATIONS." THE DISTANCE FROM THE GROUND LINE TO THE CENTERLINE OF THE LOWEST NOZZLE AND THE LOWEST CONNECTION OF THE FIRE DEPARTMENT SHALL BE NO LESS THAN 18-INCHES AND NO GREATER THAN 23-INCHES.

    BEDDING AND COVER MATERIAL - PIPE BEDDING AND COVER MATERIAL SHALL BE SAND, CRUSHED STONE CHIPS OR CRUSHED STONE SCREENINGS CONFORMING TO CHAPTER 8.43.2 OF THE "STANDARD SPECIFICATIONS".

    BACKFILL - BACKFILL MATERIAL AND INSTALLATION SHALL BE IN ACCORDANCE WITH CHAPTER 2.6.0 OF THE "STANDARD SPECIFICATIONS". GRAVEL BACKFILL IS REQUIRED IN ALL PAVED AREAS AND TO A POINT 5 FEET BEYOND THE EDGE OF PAVEMENT. TRENCHES RUNNING PARALLEL TO AND LESS THAN 5 FEET FROM THE EDGE OF PAVEMENT SHALL ALSO REQUIRE GRAVEL BACKFILL. LANDSCAPED AREAS MAY BE BACKFILLED WITH EXCAVATED MATERIAL IN CONFORMANCE WITH SECTION 8.43.5 OF THE "STANDARD SPECIFICATIONS".

17. SANITARY SEWER SPECIFICATIONS -

    PIPE - SANITARY SEWER PIPE MATERIAL SHALL BE POLYVINYL CHLORIDE (PVC) MEETING REQUIREMENTS OF ASTM D 3034, SDR-35, WITH INTEGRAL BELL TYPE FLEXIBLE ELASTOMERIC JOINTS, MEETING THE REQUIREMENTS OF ASTM D-3212.

    BEDDING AND COVER MATERIAL - BEDDING AND COVER MATERIAL SHALL CONFORM TO THE APPROPRIATE SECTIONS OF THE "STANDARD SPECIFICATION" WITH THE FOLLOWING MODIFICATION: "COVER MATERIAL SHALL BE THE SAME AS USED FOR BEDDING AND SHALL CONFORM TO SECTION 8.43.2 (A). BEDDING AND COVER MATERIAL SHALL BE PLACED IN A MINIMUM OF THREE SEPARATE LIFTS, OR AS REQUIRED TO INSURE ADEQUATE COMPACTING OF THESE MATERIALS, WITH ONE LIFT OF BEDDING MATERIAL ENDING AT OR NEAR THE SPRINGLINE OF THE PIPE. THE CONTRACTOR SHALL TAKE CARE TO COMPLETELY WORK BEDDING MATERIAL UNDER THE HAUNCH OF THE PIPE TO PROVIDE ADEQUATE SIDE SUPPORT."

    BACKFILL - BACKFILL MATERIAL AND INSTALLATION SHALL BE IN ACCORDANCE CHAPTER 2.6.0 OF THE "STANDARD SPECIFICATIONS." GRAVEL BACKFILL IS REQUIRED IN ALL PAVED AREAS AND TO A POINT 5 FEET BEYOND THE EDGE OF PAVEMENT. TRENCHES RUNNING PARALLEL TO AND LESS THAN 5 FEET FROM THE EDGE OF PAVEMENT SHALL ALSO REQUIRE GRAVEL BACKFILL. LANDSCAPED AREAS MAY BE BACKFILLED WITH EXCAVATED MATERIAL IN CONFORMANCE WITH SECTION 8.43.5 OF THE "STANDARD SPECIFICATIONS."

    MANHOLES - MANHOLES SHALL BE CONSTRUCTED IN ACCORDANCE WITH FILE NOS. 12, 13 AND 15 OF THE "STANDARD SPECIFICATIONS" AND ALL SPECIAL PROVISIONS OF THE VILLAGE OF PLEASANT PRAIRIE. STRUCTURE SHOP DRAWINGS SHALL BE SUBMITTED TO PINNACLE ENGINEERING GROUP FOR REVIEW AND APPROVAL PRIOR TO MANUFACTURING AND INSTALLATION.

    MANHOLE FRAMES AND COVERS - MANHOLE FRAMES AND COVERS SHALL BE NEENAH R-1642 WITH TYPE "B" SELF SEALING LIDS, NON-ROCKING OR EQUAL

18. WATER MAIN AND SANITARY SEWER SHALL BE INSULATED WHEREVER THE DEPTH OF COVER IS LESS THAN 6 FEET. INSULATION AND PLACING OF INSULATION SHALL CONFORM TO CHAPTER 4.17.0 "INSULATION" OF THE STANDARD SPECIFICATIONS FOR SEWER AND WATER CONSTRUCTION IN WISCONSIN 6TH EDITION UPDATED WITH ITS LATEST ADDENDUM (TYP.).
19. TRACER WIRE SHALL BE INSTALLED IN ACCORDANCE WITH THE PROVISIONS OF THESE CODE SECTIONS AS PER 182.0715(2R) OF THE STATUTES. THE TRACER WIRE FOR THE SANITARY SEWER LATERAL SHALL BE CONTINUOUS AND SHALL BE EXTENDED ABOVE GRADE VIA A 4-INCH PVC PIPE WITH SCREW-ON CAP ADJACENT TO THE PROPOSED TERMINATION POINT OF THE LATERAL FOR THE PROPOSED BUILDING.
20. SEE UTILITY PLANS AND CONSTRUCTION DETAILS FOR ADDITIONAL INFORMATION.

NORTH

GRAPHICAL SCALE (FEET)

0 1" = 0' 80'

LEGEND

SANITARY SEWER MANHOLE	WATER MAIN
STORM SEWER MANHOLE	FIRE PROTECTION
STORM SEWER CATCH BASIN (ROUND CASTING)	UTILITY CROSSING
STORM SEWER CATCH BASIN (RECTANGULAR CASTING)	ELECTRICAL CABLE
PRECAST CONCRETE FLARED END SECTION	GAS MAIN
CLEANOUT	TELEPHONE LINE
VALVE BOX	OVERHEAD WIRES
FIRE HYDRANT	LIGHTING
SANITARY SEWER	ELECTRICAL TRANSFORMER OR PEDESTAL
FORCE MAIN	POWER POLE
STORM SEWER	POWER POLE WITH LIGHTS
DRAIN TILE	STREET SIGN

PLAN I DESIGN I DELIVER	www.pinnacle-engr.com

PINNACLE ENGINEERING GROUP
ENGINEERING I NATURAL RESOURCES I SURVEYING

WISCONSIN OFFICE:
15850 W. BLUEMOUND ROAD
BROOKFIELD, WI 53005
(262) 754-8888
CHICAGO I MILWAUKEE : NATIONWIDE

LAKEVIEW LOT 40
PLEASANT PRAIRIE, WI

UTILITY PLAN

REVISIONS

PEG JOB No 559.00A-WI
PEG PM MAC
START DATE 07/11/16
SCALE

SHEET C-5 OF C-9

© COPYRIGHT 2015

FOR REVIEW ONLY

UTILITY PLAN

DRAFTED: EP DESIGNED: DCC REVIEWED: ###

www.pinnacle-engr.com

Z:\PROJECTS\2015\559.00A-WI\CAD\SHEETS\559.00A-WI UTILITY PLAN.DWG

THESE PLANS AND DESIGNS ARE COPYRIGHT PROTECTED AND MAY NOT BE USED IN WHOLE OR IN PART WITHOUT THE WRITTEN CONSENT OF PINNACLE ENGINEERING GROUP, LLC

GENERAL EROSION AND SEDIMENT CONTROL NOTES

1. ALL CONSTRUCTION SHALL ADHERE TO THE REQUIREMENTS SET FORTH IN EPA'S NATIONAL POLLUTANT DISCHARGE ELIMINATION SYSTEM (NPDES) STORMWATER GENERAL PERMIT ("WPDES" PERMIT NO. WI-S067831-4) FOR CONSTRUCTION SITE LAND DISTURBANCE ACTIVITIES. ALL EROSION AND SEDIMENT CONTROL MEASURES ARE TO BE CONSTRUCTED AND MAINTAINED IN ACCORDANCE WITH LOCAL, STATE AND FEDERAL TECHNICAL STANDARDS AND PROVISIONS IN EFFECT AT THE TIME OF CONSTRUCTION. THESE PROCEDURES AND STANDARDS SHALL BE REFERRED TO AS BEST MANAGEMENT PRACTICES (BMP'S). IT IS THE RESPONSIBILITY OF ALL CONTRACTORS ASSOCIATED WITH THE PROJECT TO OBTAIN A COPY OF, AND UNDERSTAND, THE BMP'S PRIOR TO THE START OF CONSTRUCTION ACTIVITIES.
2. THE EROSION CONTROL MEASURES INDICATED ON THE PLANS ARE THE MINIMUM REQUIREMENTS. ADDITIONAL CONTROL MEASURES AS DIRECTED BY OWNER/ENGINEER OR GOVERNING AGENCIES SHALL BE INSTALLED WITHIN 24 HOURS OF REQUEST.
3. MODIFICATIONS TO THE APPROVED SWPPP IN ORDER TO MEET UNFORESEEN FIELD CONDITIONS ARE ALLOWED IF MODIFICATIONS CONFORM TO BMP'S. ALL MODIFICATIONS MUST BE APPROVED BY OWNER/ENGINEER/GOVERNING AGENCY PRIOR TO DEVIATION OF THE APPROVED PLAN.
4. INSTALL PERIMETER EROSION CONTROL MEASURES (SUCH AS CONSTRUCTION ENTRANCES, SILT FENCE AND EXISTING INLET PROTECTION) PRIOR TO ANY SITE WORK, INCLUDING GRADING OR DISTURBANCE OF EXISTING SURFACE COVER, AS SHOWN ON PLAN IN ORDER TO PROTECT ADJACENT PROPERTIES/STORM SEWER SYSTEMS FROM SEDIMENT TRANSPORT.
5. CONSTRUCTION ENTRANCES SHALL BE INSTALLED AT ALL LOCATIONS OF VEHICLE INGRESS/EGRESS POINTS. CONTRACTOR IS RESPONSIBLE TO COORDINATE LOCATION(S) WITH THE PROPER AUTHORITIES, PROVIDE NECESSARY FEES AND OBTAIN ALL REQUIRED APPROVALS OR PERMITS. ADDITIONAL CONSTRUCTION ENTRANCES OTHER THAN AS SHOWN ON THE PLANS MUST BE APPROVED BY THE APPLICABLE GOVERNING AGENCIES PRIOR TO INSTALLATION.
6. PAVED SURFACES ADJACENT TO CONSTRUCTION ENTRANCES SHALL BE SWEPT AND/OR SCRAPED TO REMOVE ACCUMULATED SOIL, DIRT AND/OR DUST IMMEDIATELY AND AS REQUESTED BY THE GOVERNING AGENCIES.
7. ALL EXISTING STORM SEWER FACILITIES THAT WILL COLLECT RUNOFF FROM DISTURBED AREAS SHALL BE PROTECTED TO TO PREVENT SEDIMENT DEPOSITION WITHIN STORM SEWER SYSTEMS. INLET PROTECTION SHALL BE IMMEDIATELY FITTED AT THE INLET OF ALL INSTALLED STORM SEWER AND SILT FENCE SHALL BE IMMEDIATELY FITTED AT ALL INSTALLED CULVERT INLETS . ALL INLETS, STRUCTURES, PIPES, AND SWALES SHALL BE KEPT CLEAN AND FREE OF SEDIMENTATION AND DEBRIS.
8. EROSION CONTROL FOR UTILITY CONSTRUCTION (STORM SEWER, WATER MAIN, ETC.) OUTSIDE OF THE PERIMETER CONTROLS SHALL INCORPORATE THE FOLLOWING:

   PLACE EXCAVATED TRENCH MATERIAL ON THE HIGH SIDE OF THE TRENCH.

   BACKFILL, COMPACT AND STABILIZE THE TRENCH IMMEDIATELY AFTER PIPE CONSTRUCTION.

   DISCHARGE TRENCH WATER INTO A SEDIMENTATION BASIN OR FILTERING TANK IN ACCORDANCE WITH BMP'S PRIOR TO RELEASE INTO STORM SEWER OR DITCHES.
9. AT A MINIMUM, SEDIMENT BASINS AND NECESSARY TEMPORARY DRAINAGE PROVISIONS SHALL BE CONSTRUCTED AND OPERATIONAL BEFORE BEGINNING OF SIGNIFICANT MASS GRADING OPERATIONS TO PREVENT OFFSITE DISCHARGE OF UNTREATED RUNOFF.
10. ALL WATERCOURSES AND WETLANDS SHALL BE PROTECTED WITH SILT FENCE TO PREVENT ANY DIRECT DISCHARGE FROM DISTURBED SOILS.
11. ALL TEMPORARY AND PERMANENT EROSION CONTROL MEASURES MUST BE MAINTAINED AND REPAIRED AS NEEDED. THE GENERAL CONTRACTOR WILL BE RESPONSIBLE FOR INSPECTION AND REPAIR DURING CONSTRUCTION. THE OWNER WILL BE RESPONSIBLE IF EROSION CONTROL IS REQUIRED AFTER THE CONTRACTOR HAS COMPLETED THE PROJECT.
12. TOPSOIL STOCKPILES SHALL HAVE A BERM OR TRENCH AROUND THE CIRCUMFERENCE AND PERIMETER SILT FENCE TO CONTROL SILT. IF TOPSOIL STOCKPILE REMAINS UNDISTURBED FOR MORE THAN SEVEN (7) DAYS, TEMPORARY SEEDING AND STABILIZATION IS REQUIRED.
13. EROSION CONTROL MEASURES TEMPORARILY REMOVED FOR UNAVOIDABLE CONSTRUCTION ACTIVITIES SHALL BE IN WORKING ORDER IMMEDIATELY FOLLOWING COMPLETION OF SUCH ACTIVITIES OR PRIOR TO THE COMPLETION OF EACH WORK DAY, WHICH EVER OCCURS FIRST.
14. MAINTAIN SOIL EROSION CONTROL DEVICES THROUGH THE DURATION OF THIS PROJECT. ALL TEMPORARY EROSION AND SEDIMENT CONTROL MEASURES SHALL BE REMOVED WITHIN THIRTY (30) DAYS AFTER FINAL SITE STABILIZATION IS ACHIEVED OR AFTER THE TEMPORARY MEASURES ARE NO LONGER NEEDED. DISTURBANCES ASSOCIATED WITH EROSION CONTROL REMOVAL SHALL BE IMMEDIATELY STABILIZED.
15. PUMPS MAY BE USED AS BYPASS DEVICES. IN NO CASE SHALL PUMPED WATER BE DIVERTED OUTSIDE THE PROJECT LIMITS. PUMP DISCHARGE SHALL BE DIRECTED INTO AN APPROVED FILTER BAG OR APPROVED SETTLING DEVICE.
16. GRADING EFFORTS SHALL BE CONDUCTED IN SUCH A MANNER AS TO MINIMIZE EROSION. EROSION AND SEDIMENT CONTROL MEASURES SHALL CONSIDER THE TIME OF YEAR, SITE CONDITIONS, AND THE USE OF TEMPORARY OR PERMANENT MEASURES. ALL DISTURBED AREAS THAT WILL NOT BE WORKED FOR A PERIOD OF FOURTEEN (14) DAYS REQUIRE TEMPORARY SEEDING FOR EROSION CONTROL. SEEDING FOR EROSION CONTROL SHALL BE IN ACCORDANCE WITH TECHNICAL STANDARDS.
17. ALL DISTURBED SLOPES EXCEEDING 4:1, SHALL BE STABILIZED WITH NORTH AMERICAN GREEN S75BN EROSION MATTING (OR APPROVED EQUAL) AND ALL CHANNELS SHALL BE STABILIZED WITH NORTH AMERICAN GREEN C125BN (OR APPROVED EQUAL) OR APPLICATION OF AN APPROVED POLYMER SOIL STABILIZATION TREATMENT OR A COMBINATION THEREOF, AS REQUIRED. EROSION MATTING AND/OR NETTING USED ONSITE SHALL BE INSTALLED IN ACCORDANCE WITH MANUFACTURER'S GUIDELINES.
18. DURING PERIODS OF EXTENDED DRY WEATHER, THE CONTRACTOR SHALL KEEP A WATER TRUCK ON SITE FOR THE PURPOSE OF WATERING DOWN SOILS WHICH MAY OTHERWISE BECOME AIRBORNE.THE CONTRACTOR IS RESPONSIBLE FOR CONTROLLING WIND EROSION (DUST) DURING CONSTRUCTION AT HIS/HER EXPENSE.
19. DISTURBED AREAS AND AREAS USED FOR STORAGE OF MATERIALS THAT ARE EXPOSED TO PRECIPITATION SHALL BE VISUALLY INSPECTED FOR EVIDENCE OF, OR THE POTENTIAL FOR, POLLUTANTS ENTERING THE DRAINAGE SYSTEM ON A DAILY BASIS.
20. QUALIFIED PERSONNEL (PROVIDED BY THE GENERAL/PRIME CONTRACTOR) SHALL INSPECT DISTURBED AREAS OF THE CONSTRUCTION SITE THAT HAVE NOT BEEN FINALLY STABILIZED AND EROSION AND SEDIMENT CONTROLS WITHIN 24 HOURS OF ALL 0.5-INCH, OR MORE, PRECIPITATION EVENTS WITH A MINIMUM INSPECTION INTERVAL OF ONCE EVERY SEVEN (7) CALENDAR DAYS IN THE ABSENCE OF A QUALIFYING RAIN OR SNOWFALL EVENT. REPORTING SHALL BE IN ACCORDANCE WITH OF THE GENERAL PERMIT. CONTRACTOR SHALL IMMEDIATELY ARRANGE TO HAVE ANY DEFICIENT ITEMS REVEALED DURING INSPECTIONS REPAIRED/REPLACED.
21. SEE ADDITIONAL DETAILS AND NOTES ON SITE STABILIZATION AND CONSTRUCTION DETAILS.

LEGEND

- SANITARY SEWER MANHOLE
- STORM SEWER MANHOLE
- STORM STORM CATCH BASIN (ROUND CASTING)
- STORM SEWER CATCH BASIN (RECTANGULAR CASTING)
- PRECAST FLARED END SECTION
- CLEANOUT
- VALVE BOX
- FIRE HYDRANT
- 730 PROPOSED CONTOUR
- +730.0 PROPOSED SPOT ELEVATION
- WETLANDS
- FLOODPLAIN
- HIGH WATER LEVEL (HWL)
- NORMAL WATER LEVEL (NWL)
- FLOW / PAVEMENT DIRECTION OF SURFACE FLOW
- DITCH OR SWALE
- DIVERSION SWALE
- OVERFLOW RELIEF ROUTING
- SF SILT FENCE
- STRAW WATTLE
- INLET PROTECTION
- CONSTRUCTION ENTRANCE
- HYDROSEED (PER MANUFACTURER SPECIFICATIONS)
- EROSION CONTROL BLANKET (NORTH AMERICAN GREEN S75 OR EQUAL)

CONSTRUCTION SITE SEQUENCING

1. INSTALL PERIMETER SILT FENCE, INLET PROTECTION AND TEMPORARY CONSTRUCTION ENTRANCE.
2. STRIP AND STOCKPILE TOPSOIL, INSTALL SILT FENCE AROUND PERIMETER OF STOCKPILE.
3. CONDUCT ROUGH GRADING EFFORTS AND INSTALL CHECK DAMS AND SEDIMENT TRAPS/BASINS AS NEEDED.
4. INSTALL UTILITY PIPING AND STRUCTURES, IMMEDIATELY INSTALL INLET PROTECTION.
5. COMPLETE FINAL GRADING, INSTALLATION OF GRAVEL BASE COURSES, PLACEMENT OF CURBS, PAVEMENTS, WALKS, ETC.
6. PLACE TOPSOIL AND IMMEDIATELY STABILIZE DISTURBED AREAS WITH EROSION CONTROLS.
7. EROSION CONTROL MEASURES SHALL BE REMOVED ONLY AFTER SITE CONSTRUCTION IS COMPLETE WITH ALL SOIL SURFACES HAVING AN ESTABLISHED VEGETATIVE COVER.

   CONTRACTOR MAY MODIFY SEQUENCING AFTER ITEM 1 AS NEEDED TO COMPLETE CONSTRUCTION IF EROSION CONTROLS ARE MAINTAINED IN ACCORDANCE WITH THE CONSTRUCTION SITE EROSION CONTROL REQUIREMENTS.

NORTH

GRAPHICAL SCALE (FEET)

0 1" = 0' 80'

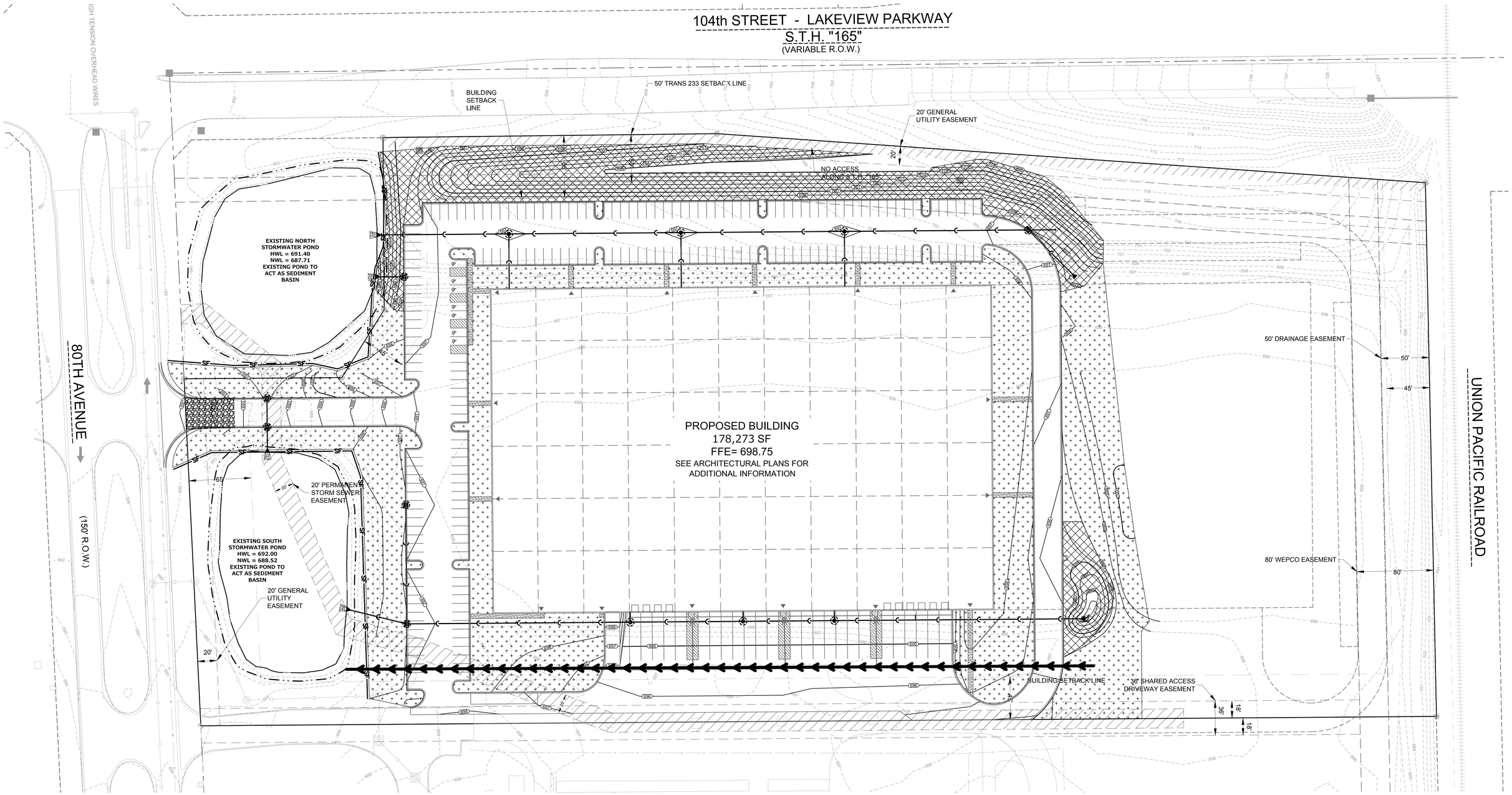

www.pinnacle-engr.com

FOR REVIEW ONLY

SITE STABILIZATION PLAN

REVIEWED: ####
DESIGNED: DCC
DRAFTED: EP

PLAN I DESIGN I DELIVER
www.pinnacle-engr.com

PINNACLE ENGINEERING GROUP
ENGINEERING I NATURAL RESOURCES I SURVEYING

WISCONSIN OFFICE:
15850 W. BLUEMOUND ROAD
BROOKFIELD, WI 53005
(262) 754-8888
CHICAGO I MILWAUKEE : NATIONWIDE

LAKEVIEW LOT 40
PLEASANT PRAIRIE, WI

SITE STABILIZATION PLAN

REVISIONS

PEC JOB No 559.00A-WI
PEC PM MAC
START DATE 07/11/16
SCALE 1"=100'

SHEET C-6 & C-9

© COPYRIGHT 2016

Z:\PROJECTS\2015\559.00A-WI\CAD\SHEETS\559.00A-WI SITE STABILIZATION PLAN.DWG

THESE PLANS AND DESIGNS ARE COPYRIGHT PROTECTED AND MAY NOT BE USED IN WHOLE OR IN PART WITHOUT THE WRITTEN CONSENT OF PINNACLE ENGINEERING GROUP, LLC

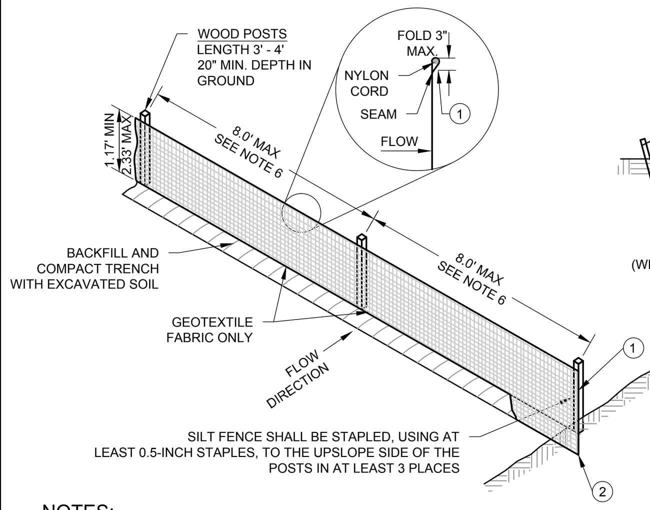

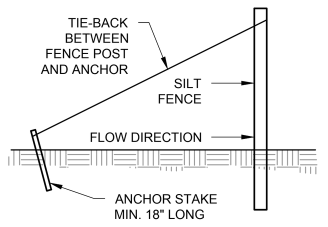

SILT FENCE TIE BACK
(WHEN ADDITIONAL SUPPORT REQUIRED)

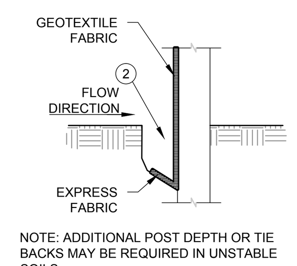

NOTE: ADDITIONAL POST DEPTH OR TIE BACKS MAY BE REQUIRED IN UNSTABLE SOILS

TRENCH DETAIL

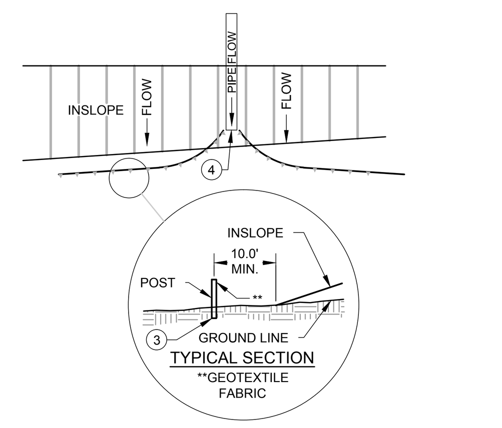

SILT FENCE ALONG SLOPES & OUTFALLS

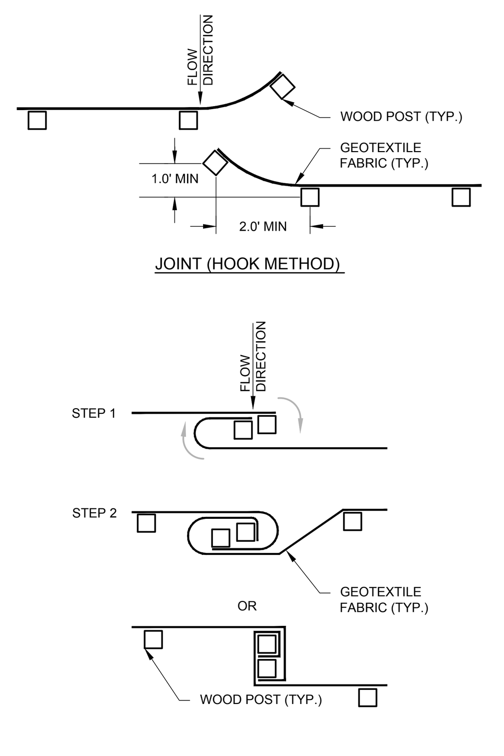

JOINT (TWIST METHOD)

NOTES:

1. GEOTEXTILE FABRIC SHALL MEET THE REQUIREMENTS OF MATERIAL SPECIFICATION 592 GEOTEXTILE TABLE 1 OR 2, CLASS I WITH EQUIVALENT OPENING SIZE OF AT LEAST 30 FOR NONWOVEN AND 50 FOR WOVEN.
2. SILT FENCE SHALL BE ANCHORED BY SPREADING AT LEAST 8-INCHES OF FABRIC IN A 4-INCH WIDE AND 6-INCH DEEP TRENCH OR 6-INCH DEEP V-TRENCH ON THE UPSLOPE SIDE OF THE FENCE. TRENCHES SHALL NOT BE EXCAVATED WIDER OR DEEPER THAN NECESSARY FOR PROPER INSTALLATION.
3. FOLD MATERIAL TO FIT TRENCH AND BACKFILL AND COMPACT TRENCH WITH EXCAVATED SOIL.
4. WOOD POSTS SHALL BE A MINIMUM SIZE OF 1.125-INCHES x 1.125-INCHES OF DRIED OAK OR HICKORY.
5. SILT FENCE TO EXTEND ABOVE THE TOP OF PIPE, WHERE APPLICABLE.
6. POST SPACING SHALL BE SELECTED BASED ON GEOTEXTILE FABRIC (8-FEET FOR WOVEN AND 3-FEET FOR NON-WOVEN).

SILT FENCE

#100-A 10-02-12

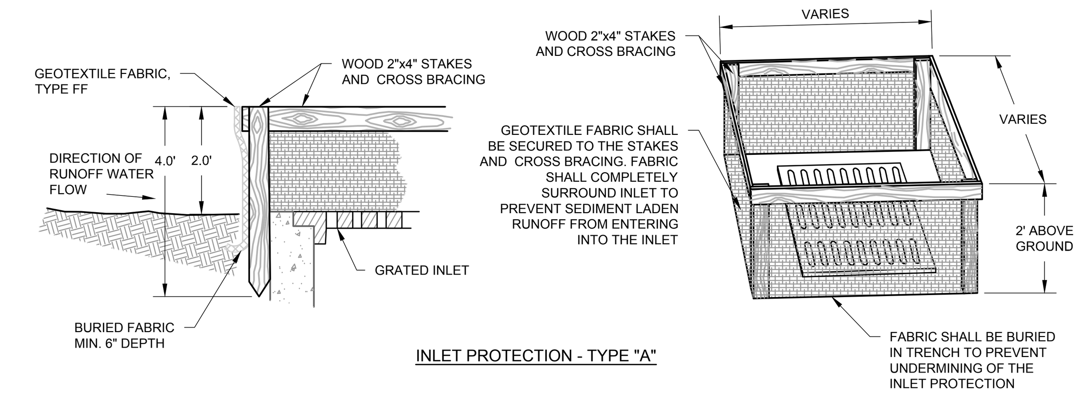

INLET PROTECTION - TYPE "A"

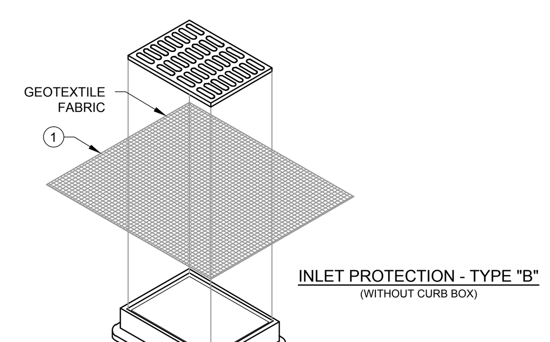

INLET PROTECTION - TYPE "B"
(WITHOUT CURB BOX)

TYPE "B" & "C" INSTALLATION NOTES

TRIM EXCESS FABRIC IN THE FLOW LINE TO WITHIN 3 INCHES OF THE GRATE.

THE CONTRACTOR SHALL DEMONSTRATE A METHOD OF MAINTENANCE, USING A SEWN FLAP, HAND HOLDS OR OTHER METHODS TO PREVENT ACCUMULATED SEDIMENT FROM ENTERING THE INLET.

NOTES:

1. GEOTEXTILE FABRIC SHALL MEET THE REQUIREMENTS OF MATERIAL SPECIFICATION 592 GEOTEXTILE TABLE 1 OR 2, CLASS I, WITH AN EOS OF AT LEAST 30 FOR NONWOVEN AND 50 FOR WOVEN.
2. WHEN REMOVING OR MAINTAINING INLET PROTECTION, CARE SHALL BE TAKEN SO THAT THE SEDIMENT TRAPPED ON THE GEOTEXTILE FABRIC DOES NOT FALL INTO THE INLET. ANY MATERIAL FALLING INTO THE INLET SHALL BE REMOVED IMMEDIATELY.

(1) FINISHED SIZE, INCLUDING FLAP POCKET WHERE REQUIRED, SHALL EXTEND A MINIMUM OF 10 INCHES AROUND THE PERIMETER TO FACILITATE MAINTENANCE OR REMOVAL.

(2) FOR INLET PROTECTION, TYPE "C" (WITH CURB BOX), AN ADDITIONAL 18 INCHES OF FABRIC IS WRAPPED AROUND THE WOOD AND SECURED WITH STAPLES. THE WOOD SHALL NOT BLOCK THE ENTIRE HEIGHT OF THE CURB BOX OPENING.

(3) FLAP POCKETS SHALL BE LARGE ENOUGH TO ACCEPT WOOD 2x4.

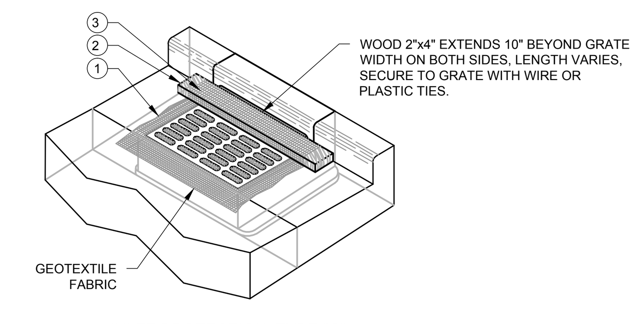

INLET PROTECTION, TYPE "C"
(WITH CURB BOX)

INLET PROTECTION

#104 04-24-13

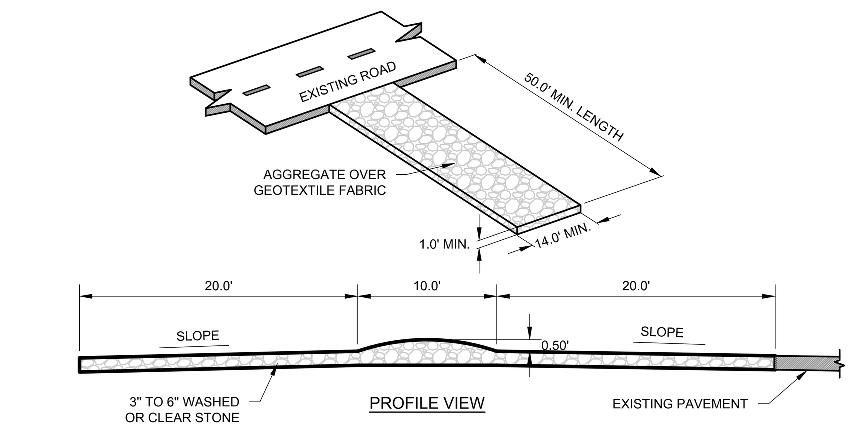

PROFILE VIEW

NOTES:

1. ALL TRACKING PAD MATERIALS AND INSTALLATION SHALL BE IN CONFORMANCE WITH WI DNR TECHNICAL STANDARD 1057.
2. TRACKING PADS SHALL BE INSTALLED PRIOR TO ANY TRAFFIC LEAVING THE SITE. CONTRACTOR SHALL VERIFY LOCATION WITH OWNER.
3. THE AGGREGATE FOR TRACKING PADS SHALL BE 3 TO 6 INCH CLEAR OR WASHED STONE. ALL MATERIALS TO BE RETAINED ON A 3-INCH SIEVE
4. THE AGGREGATE SHALL BE PLACED IN A LAYER AT LEAST 12-INCHES THICK. ON SITES WHERE SATURATED CONDITIONS ARE EXPECTED DURING THE LIFE OF THE PAD, THE PAD SHALL BE UNDERLAIN WITH GEOTEXTILE FABRIC WHICH MEETS MATERIAL SPECIFICATION 592 GEOTEXTILE, TABLE 1 OR 2, CLASS I, II OR IV, TO PREVENT MIGRATION OF UNDERLYING SOILS INTO THE STONE LAYER.
5. THE TRACKING PAD SHALL BE THE FULL WIDTH OF THE EGRESS POINT. MINIMUM WIDTH IS 14 FEET FOR ONE-WAY TRAFFIC AND 20 FEET FOR TWO-WAY TRAFFIC, WITH AN ADDITIONAL INCREASE OF 4 FEET FOR TRAILER TRAFFIC. THE TRACKING PAD SHALL BE A MINIMUM 50-FEET LONG.
6. ANY SEDIMENT TRACKED ONTO A PUBLIC OR PRIVATE ROAD SHOULD BE REMOVED BY STREET CLEANING, NOT FLUSHING, AT THE END OF EACH WORKING DAY.
7. TRACKING PADS SHALL, AT A MINIMUM, BE INSPECTED WEEKLY AND WITHIN 24-HOURS AFTER EVERY PRECIPITATION EVENT THAT PRODUCES 0.5-INCHES OF RAIN OR MORE DURING A 24-HOUR PERIOD.
8. THE TRACKING PAD PERFORMANCE SHALL BE MAINTAINED BY SCRAPING OR TOP-DRESSING WITH ADDITIONAL AGGREGATE.

CONSTRUCTION ENTRANCE

#107-WI 10-02-12

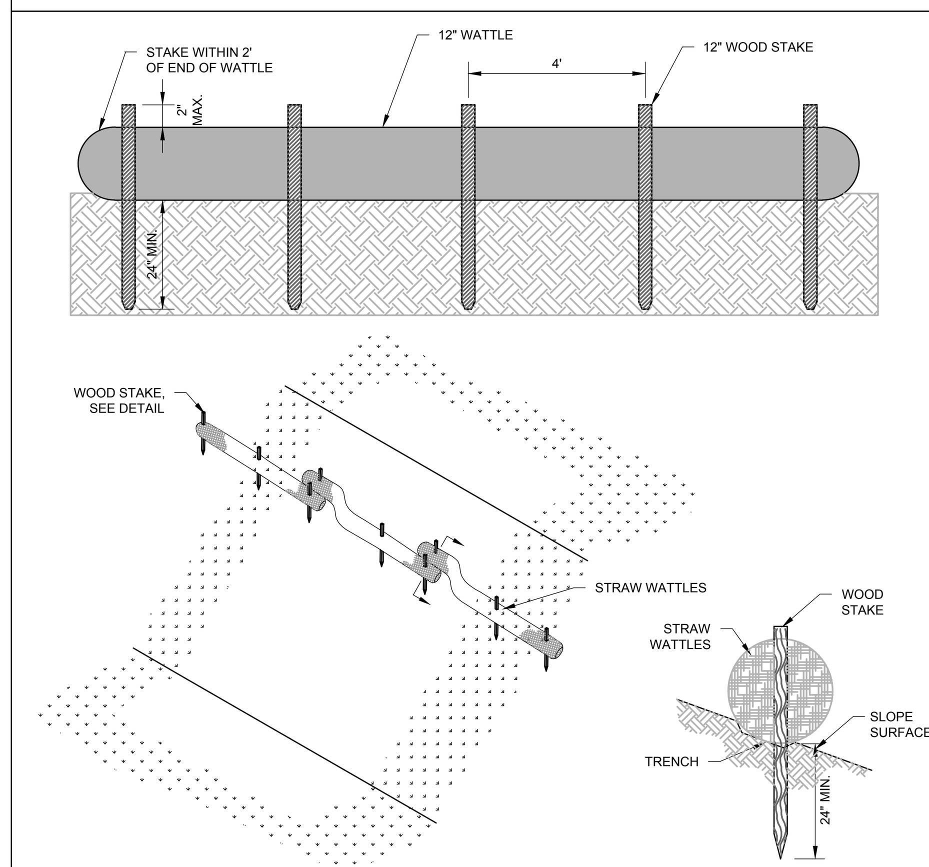

STRAW WATTLE

#137 06/01/15

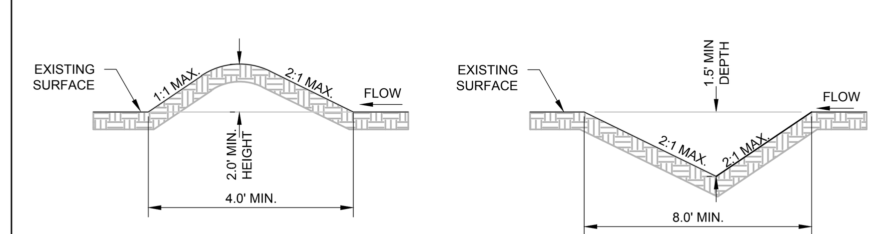

BERM

CHANNEL

NOTES:

1. DIVERSION MAY REQUIRE AREAS OF BERM AND OTHER AREAS OF CHANNEL TO PROVIDE SUFFICIENT PERIMETER PROTECTION.
2. DIVERSION BERM VERSUS CHANNEL PRACTICES SHALL BE SELECTED SUCH TO PREVENT PONDING (E.G. - POSITIVE DRAINAGE SHALL BE MAINTAINED).
3. FOR DIVERSIONS THAT ARE TO SERVE LONGER THAN 30 DAYS, THE SIDE SLOPES INCLUDING THE RIDGE, AND THE DOWN SLOPE SIDE OF THE DIVERSION SHALL BE STABILIZED AS SOON AS THEY CONSTRUCTED BY EQUIPMENT TRACKING AND TEMPORARY SEEDING. FOR DIVERSIONS SERVING LESS THAN 30 DAYS, THE DOWN SLOPE SIDE OF THE DIVERSION SHALL BE STABILIZED AS SOON AS CONSTRUCTED BY EQUIPMENT TRACKING AND TEMPORARY SEEDING .
4. DIVERSIONS SHALL BE PROTECTED FROM DAMAGE BY CONSTRUCTION ACTIVITIES. AT ALL POINTS WHERE DIVERSION BERMS OR CHANNELS WILL BE CROSSED BY CONSTRUCTION EQUIPMENT, THE DIVERSION SHALL BE SHAPED APPROPRIATELY AND/OR TEMPORARY CULVERTS OF ADEQUATE CAPACITY MAYBE ADDED AT CROSSINGS.
5. AT MINIMUM, INSTALL ONE DITCH CHECK (SEE DETAIL) FOR EVERY 2 VERTICAL FEET OF DROP.
6. DIVERSIONS SHALL, AT A MINIMUM, BE INSPECTED WEEKLY AND WITHIN 24 HOURS AFTER EVERY PRECIPITATION EVENT THAT PRODUCES 0.5 INCHES OF RAIN OR MORE DURING A 24 HOUR PERIOD. MAINTENANCE SHALL BE COMPLETED AS SOON AS POSSIBLE WITH CONSIDERATION TO SITE CONDITIONS. ACCUMULATED SEDIMENT SHALL BE REMOVED WHEN IT REACHES HALF THE HEIGHT OF THE DIVERSION BERM.

DIVERSION BERM / CHANNEL

#113-A 10-02-12

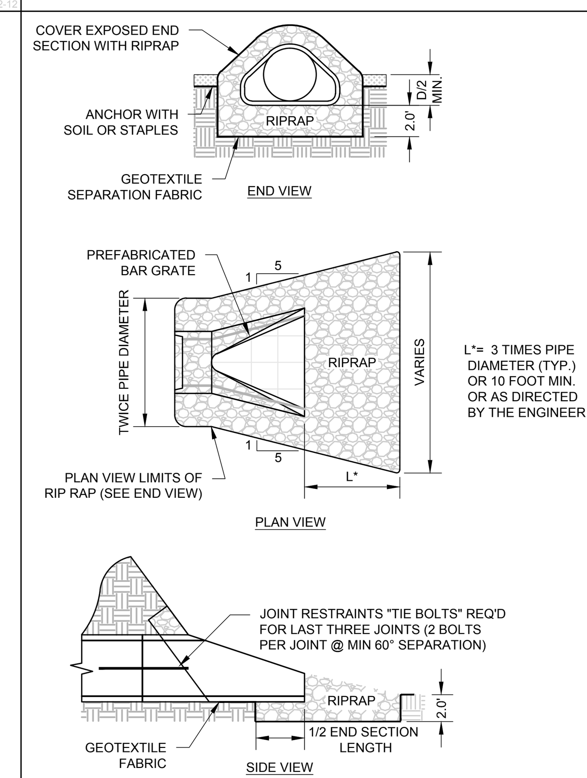

NOTES:

1. RIP RAP AND GEOTEXTILE FABRIC SHALL MEET REQUIREMENTS FOR STANDARD SPECIFICATIONS FOR HIGHWAY AND STRUCTURE CONSTRUCTION.

RIP RAP AT END SECTIONS

#124 12/26/12

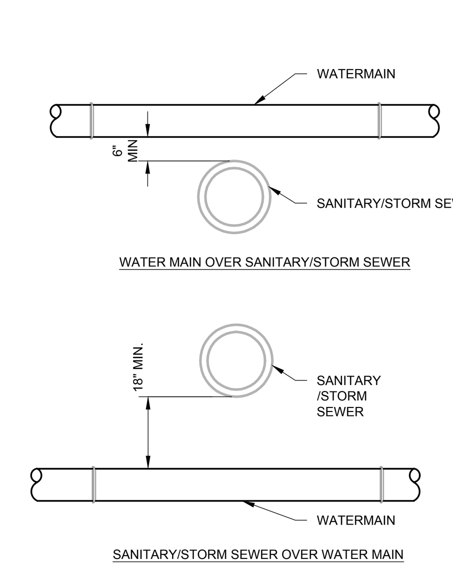

NOTES:

1. AT CROSSING, ONE FULL 18 FOOT LENGTH OF WATERMAIN SHALL BE CENTERED ON THE SEWER. MAINTAIN A MINIMUM HORIZONTAL SEPARATION OF 8 FEET.

WATER MAIN SEPARATION

#421 10-15-12

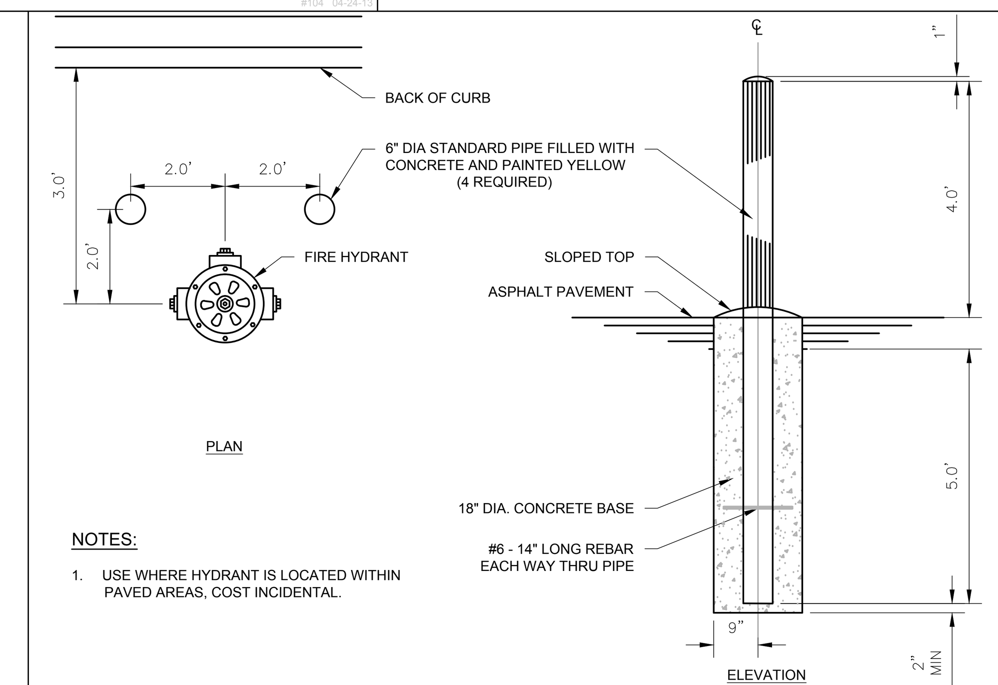

NOTES:

1. USE WHERE HYDRANT IS LOCATED WITHIN PAVED AREAS, COST INCIDENTAL.

HYDRANT BOLLARD

#503 10-10-12

1.0 POTENTIAL POLLUTANT SOURCES

GIVEN THE PROPOSED ACTIVITY ON THE PROJECT SITE, THE PRIMARY POTENTIAL POLLUTANT SOURCE ASSOCIATED WITH THIS CONSTRUCTION PROJECT IS SOIL EROSION AND TRANSPORTATION; REFER TO SECTION 4 OF THIS PLAN. ADDITIONAL POTENTIAL SOURCES OF POLLUTION MAY INCLUDE: FUEL TANKS, WASTE CONTAINERS, OIL OR OTHER PETROLEUM PRODUCTS, DETERGENTS, PAINTS, CONSTRUCTION DEBRIS, SANITARY STATIONS, FERTILIZERS, AND DUST; REFER TO SECTION 6 OF THIS PLAN.

2.0 EROSION AND SEDIMENT CONTROL IMPLEMENTATION

THE FOLLOWING ARE DESCRIPTIONS OF THE EROSION AND SEDIMENT CONTROL PRACTICES THAT SHALL BE IMPLEMENTED DURING CONSTRUCTION OF THIS PROJECT. IN ADDITION TO THESE MEASURES, CONTRACTOR SHALL DISTURB ONLY AREAS NECESSARY TO COMPLETE THE CONSTRUCTION PROJECT. ALL PRACTICES SHALL BE CONDUCTED IN ACCORDANCE WITH THE BEST MANAGEMENT PRACTICES (BMP).

2.1 CONSTRUCTION AND EROSION CONTROL SEQUENCING

CONSTRUCTION SEQUENCING WILL BE UTILIZED AS A MEANS OF CONTROLLING EROSION AND LIMITING SEDIMENT TRANSPORT. SEQUENCING AS LISTED BELOW IS GENERAL IN NATURE AND MAY VARY DEPENDING ON WEATHER CONDITIONS AND/OR PHASING OF CONSTRUCTION. THE CONTRACTOR SHALL SUBMIT A DETAILED SITE SEQUENCING PLAN TO OWNER FOR APPROVAL AT LEAST 5 BUSINESS DAYS PRIOR TO COMMENCEMENT OF ANY CONSTRUCTION ACTIVITIES. CONTRACTOR MAY MODIFY SEQUENCING AFTER ITEM 6 AS NEEDED TO COMPLETE CONSTRUCTION ONLY IF EROSION CONTROLS ARE MAINTAINED IN ACCORDANCE WITH THE CONSTRUCTION SITE EROSION AND SEDIMENT CONTROL REQUIREMENTS.

1. INSTALL TEMPORARY CONSTRUCTION ENTRANCES, INLET PROTECTION ON EXISTING STORM SEWER AND CULVERT INLET LOCATIONS, AND PERIMETER SILT FENCING.
2. INSTALL SILT FENCING ALONG THE PERIMETER OF PROPOSED TOPSOIL STOCKPILE LOCATIONS. THE FIRST TOPSOIL DEPOSITED WITHIN THE STOCKPILE LIMITS SHALL BE PLACED TO CREATE TEMPORARY BERMING ALONG THE SILT FENCE TO PREVENT DIRECT STORMWATER RUNOFF AGAINST SILT FENCING. CONTRACTOR SHALL LIMIT LAND DISTURBING ACTIVITIES ASSOCIATED WITH TEMPORARY BERMING TO A MINIMUM.
3. STRIP TOPSOIL WITHIN THE LIMITS OF THE SEDIMENT TRAPS THAT WILL BE USED FOR TEMPORARY SEDIMENT CONTROL. STRIPPED TOPSOIL SHALL BE PLACED TO CONSTRUCT DIVERSION BERMING OR PLACED WITHIN THE STOCKPILE LIMITS.
4. STRIP TOPSOIL ALONG THE REMAINDER OF DIVERSION BERMING AND IMMEDIATELY PLACE TOPSOIL TO CREATE THE BERMING. MASS TOPSOIL STRIPPING SHALL NOT OCCUR UNTIL ALL DOWNSTREAM SEDIMENT CONTROLS ARE IN PLACE.
5. CONDUCT ROUGH GRADING OPERATIONS AND UTILITY PIPING INSTALLATION. DRAIN TILE SHALL NOT BE INSTALLED UNTIL UPLAND AREAS CONTRIBUTING STORMWATER RUNOFF ARE STABILIZED. DITCH CHECKS SHALL BE INSTALLED WITHIN DRAINAGE DITCHES IMMEDIATELY FOLLOWING CREATION OF DITCHES AND INLET PROTECTION SHALL BE INSTALLED TO PROTECT ANY STORM SEWER OR CULVERTS THAT WILL FUNCTION DURING CONSTRUCTION.
6. FINE GRADE SUB-GRADE SOILS WITHIN PAVEMENT AND BUILDING LIMITS. PLACE STONE BASE MATERIAL AS SOON AS POSSIBLE FOLLOWING COMPLETION OF FINE GRADING EFFORTS.
7. FINE GRADE REMAINING DISTURBED AREAS. PLACE SALVAGED TOPSOIL, EROSION BLANKETS/MATTING, AND SEED/MULCH AS SOON AS POSSIBLE FOLLOWING COMPLETION OF FINE GRADING EFFORTS.
8. EROSION CONTROLS SHALL NOT BE REMOVED UNTIL SITE IS FULLY STABILIZED OR 70% VEGETATIVE COVER IS ESTABLISHED. CONTRACTOR IS RESPONSIBLE FOR REMOVAL OF SILT FENCE, TEMPORARY FENCING/PRETECTION, DITCH CHECKS, AND OTHER TEMPORARY CONTROLS, AND RESTORATION PRACTICES AS NECESSARY, TO THE SATISFACTION OF THE OWNER.

2.2 STABILIZATION PRACTICES

THE DATES WHEN MAJOR GRADING ACTIVITIES OCCUR, WHEN CONSTRUCTION ACTIVITIES TEMPORARILY OR PERMANENTLY CEASE ON A PORTION OF THE SITE, AND WHEN STABILIZATION MEASURES ARE INITIATED, SHALL BE RECORDED ON THE STABILIZATION SCHEDULE FOR MAJOR GRADING ACTIVITIES.

STABILIZATION MEASURES SHALL BE INITIATED AS SOON AS PRACTICABLE IN PORTIONS OF THE SITE WHERE CONSTRUCTION ACTIVITIES HAVE TEMPORARILY OR PERMANENTLY CEASED. NO MORE THAN SEVEN (7) DAYS SHALL PASS AFTER THE CONSTRUCTION ACTIVITY IN THAT PORTION OF THE SITE HAS PERMANENTLY CEASED UNLESS:

THE INITIATION OF STABILIZATION MEASURES BY THE SEVENTH (7) DAY AFTER CONSTRUCTION ACTIVITY TEMPORARILY OR PERMANENTLY CEASE IS PRECLUDED BY SNOW COVER. IN THAT EVENT, STABILIZATION MEASURE SHALL BE INITIATED AS SOON AS PRACTICABLE.

CONSTRUCTION ACTIVITY WILL RESUME ON A PORTION OF THE SITE WITHIN FOURTEEN (14) DAYS FROM WHEN ACTIVITIES CEASED, (I.E. THE TOTAL TIME PERIOD THAT THE CONSTRUCTION ACTIVITY IS TEMPORARILY CEASED IS LESS THAN FOURTEEN (14) DAYS). IN THAT EVENT, STABILIZATION MEASURES DO NOT HAVE TO BE INITIATED ON THAT PORTION OF THE SITE BY THE SEVENTH (7) DAY AFTER CONSTRUCTION ACTIVITY HAS TEMPORARILY CEASED. SEE THE SOIL PROTECTION CHART PRESENTED IN THE CONSTRUCTION DOCUMENTS FOR RATES OF PERMANENT AND TEMPORARY VEGETATION.

STABILIZATION MEASURES SHALL BE DETERMINED BASED ON SITE CONDITIONS AT THE TIME CONSTRUCTION ACTIVITY HAS CEASED, INCLUDING BUT NOT LIMITED TO WEATHER CONDITIONS AND LENGTH OF TIME MEASURE MUST BE EFFECTIVE. THE FOLLOWING ARE ACCEPTABLE STABILIZATION MEASURES.

PERMANENT SEEDING; IN ACCORDANCE WITH APPROVED LANDSCAPING PLAN
TEMPORARY SEEDING MAY CONSIST OF SPRING OATS (100LBS/ACRE) AND/OR WHEAT OR CEREAL RYE (150LBS/ACRE)
HYDRO-MULCHING WITH A TACKIFIER
GEOTEXTILE EROSION MATTING
SODDING

2.3 STRUCTURAL PRACTICES

THE FOLLOWING ARE DESCRIPTIONS OF STRUCTURAL PRACTICES TO BE IMPLEMENTED TO DIVERT FLOWS FROM EXPOSED SOILS, STORE FLOWS, OR OTHERWISE LIMIT THE DISCHARGE OF POLLUTANTS FROM EXPOSED AREAS OF THE SITE INCLUDING THE PROPOSED AND EXISTING WETLAND AREAS. SUCH PRACTICES COULD INCLUDE SILT FENCE, PROTECTION FENCE, CONSTRUCTION ENTRANCE, DITCH CHECK, EROSION CONTROL MATTING, DIVERSION BERM/SWALE, SEDIMENT TRAP, LEVEL SPREADER, INLET PROTECTION, OUTLET PROTECTION, AND TEMPORARY OR PERMANENT SEDIMENT BASIN. THE FOLLOWING STRUCTURAL PRACTICES ARE TO BE UTILIZED DURING THIS PROJECT.

SILT FENCE SHALL BE PLACED DOWN SLOPE OF DISTURBED AREAS OF THE CONSTRUCTION SITE AND AROUND THE PERIMETER OF THE TOPSOIL STOCKPILE. THIS INCLUDES PROTECTION OF EXISTING WETLAND AREAS TO BE MAINTAINED. SILT FENCE MAY ALSO BE USED AS A TEMPORARY CONTROL DEVICE WHERE SEDIMENTATION RUNOFF IS DISCOVERED.

CONSTRUCTION ENTRANCE SHALL BE INSTALLED TO REDUCE SOIL EROSION POLLUTANTS FROM LEAVING THE SITE DURING CONSTRUCTION ACTIVITIES. IF THE CRUSHED STONE DOES NOT ADEQUATELY REMOVE MUD FROM VEHICLE TIRES, THEY SHALL BE HOSED OFF BEFORE ENTERING A PAVED ROADWAY. ANY SOIL DEPOSITED ON THE PUBLIC PAVED ROAD WAY SHALL BE REMOVED IMMEDIATELY.

DITCH CHECK (STRAW WATTLES) SHALL BE INSTALLED IN DRAINAGE CHANNELS AS NEEDED.

EROSION CONTROL MATTING SHALL BE PLACED ON AREAS OR EMBANKMENTS HAVING SLOPES GREATER THAN OR EQUAL TO 3H:1V, BEFORE VEGETATION IS ESTABLISHED.

DIVERSION BERM/SWALE SHALL BE CONSTRUCTED TO DIVERT RUNOFF AROUND THE SITE AND TO DIVERT RUNOFF FROM THE DISTURBED AREA TO A SEDIMENT TRAP OR OTHER CONTROL. BERMS/SWALES SHALL BE STABILIZED WITH EQUIPMENT TRACKING AND TEMPORARY SEEDING.

SEDIMENT TRAPS/BASIN SHALL BE CONSTRUCTED TO COLLECT RUNOFF AND RUNOFF FROM SITE DIVERSION BERMS/SWALES.

INLET PROTECTION SHALL BE INSTALLED AT STORMWATER DRAINAGE INLETS TO REDUCE SEDIMENT WITHIN STORM SEWER CONVEYANCE FEATURES.

OUTLET SCOUR PROTECTION SHALL BE INSTALLED AT STORMWATER DRAINAGE OUTLETS TO DIFFUSE FLOWS.

3.0 ADDITIONAL PRACTICES

ADDITIONAL POLLUTANT CONTROL MEASURES TO BE IMPLEMENTED DURING CONSTRUCTION ACTIVITIES SHALL INCLUDE, BUT NOT BE LIMITED TO THE FOLLOWING.

CONSTRUCTION WASTE SHALL BE PROPERLY DISPOSED OF. THIS INCLUDES ALL CONSTRUCTION SITE WASTE MATERIAL, SANITARY WASTE, AND WASTE FROM VEHICLE TRACKING OF SEDIMENTS. THE CONTRACTOR SHALL ENSURE THAT NO MATERIAL WASTES OR UNUSED BUILDING MATERIALS SHALL BE BURIED, DUMPED, BURNED, OR DISCHARGED TO THE WATERS OF THE STATE. VEHICLES HAULING MATERIAL AWAY FROM THE SITE SHALL BE COVERED WITH A TARPAULIN TO PREVENT BLOWING DEBRIS.

DUST CONTROL SHALL BE ACCOMPLISHED BY ONE OR MORE OF THE FOLLOWING METHODS:

COVERING 30% OR MORE OF THE SOIL SURFACE WITH A NON-ERODIBLE MATERIAL.

ROUGHENING (EQUIPMENT TRACKING) THE SOIL TO PRODUCE RIDGES PERPENDICULAR TO THE PREVAILING WIND. RIDGES SHALL BE AT LEAST SIX (6) INCHES IN HEIGHT.

FREQUENT WATERING OF EXCAVATION AND FILL AREAS.

PROVIDING GRAVEL OR PAVING AT ENTRANCE/EXIT DRIVES, PARKING AREAS AND TRANSIT PATHS.

STREET SWEEPING SHALL BE PERFORMED TO IMMEDIATELY REMOVE ANY SEDIMENT TRACKED ON PAVEMENTS.

4.0 EROSION AND SEDIMENT STRUCTURAL PRACTICE MAINTENANCE

THE FOLLOWING MAINTENANCE PRACTICES SHALL BE USED TO MAINTAIN, IN GOOD AND EFFECTIVE OPERATING CONDITIONS, VEGETATION, EROSION AND SEDIMENT CONTROL MEASURES, AND OTHER PROTECTIVE MEASURES IDENTIFIED IN THIS PLAN. UPON IDENTIFICATION, DEFICIENCIES IN STORMWATER CONTROLS SHALL BE ADDRESSED IMMEDIATELY. THE MAINTENANCE PROCEDURES FOR THIS DEVELOPMENT SHALL INCLUDE, BUT NOT BE LIMITED TO THE BELOW.

SILT FENCE - REPAIR OR REPLACE ANY DAMAGED FILTER FABRIC AND/OR STAKES. REMOVE ACCUMULATED SEDIMENT WHEN IT HAS REACHED ONE-HALF THE ABOVE GROUND HEIGHT OF THE FENCE.

CONSTRUCTION ENTRANCE - AS NEEDED, ADD STONE TO MAINTAIN CONSTRUCTION ENTRANCE DIMENSIONS AND EFFECTIVENESS.

DITCH CHECK (STRAW WATTLES) - RE-SECURE STAKES; ADJUST OR REPOSITION BALES TO ADDRESS PROPER FLOW OF STORMWATER; AND REMOVE ACCUMULATED SEDIMENT WHEN IT HAS REACHED ONE-HALF THE HEIGHT OF THE BALE.

EROSION CONTROL MATTING - REPAIR MATTING IMMEDIATELY IF INSPECTION REVEALS BREACHED OR FAILED CONDITIONS. REPAIR AND RE-GRADE SOIL WHERE CHANNELIZATION HAS OCCURRED.

DIVERSION BERM/SWALE - REPLACE OR RE-COMPACT THE CONSTRUCTION MATERIALS AS NECESSARY.

SEDIMENT TRAP - REMOVE AND DISPOSE OF THE ACCUMULATED SEDIMENT WHEN IT HAS REACHED THE SEDIMENT STORAGE ELEVATION.

INLET PROTECTION - CLEAN, REPAIR OR REPLACE FILTER FABRIC AND/OR STONE WHEN CONTROL MEASURE IS CLOGGED. INLET FILTER BAGS SHALL BE REPLACED ONCE ONE-HALF FULL OF SEDIMENT.

OUTLET PROTECTION - CLEAN, REPAIR OR REPLACE FILTER FABRIC, TURF REINFORCEMENT MATTING AND/OR STONE WHEN CONTROL MEASURE IS ONE-HALF FULL OF SEDIMENT.

SEDIMENT BASIN - AT THE END OF CONSTRUCTION, CONTRACTOR SHALL REMOVE AND DISPOSE OF THE ACCUMULATED SEDIMENT AND RESTORE BASIN AREA TO INTENDED POST-CONSTRUCTION DESIGN GRADES.

5.0 INSPECTION

INSPECTIONS SHALL BE COMPLETED WITHIN TWENTY-FOUR (24) HOURS OF THE END OF A RAINFALL EVENT THAT IS ONE-HALF INCH OR GREATER OR EQUIVALENT SNOWFALL, OR AT A MINIMUM ONCE EVERY SEVEN (7) CALENDAR DAYS. INSPECTIONS SHALL BE UNDERTAKEN BY QUALIFIED PERSONNEL PROVIDED BY THE CONTRACTOR, AND SHALL INCLUDE: DISTURBED AREAS OF THE CONSTRUCTION SITE THAT HAVE NOT BEEN FINALLY STABILIZED, STRUCTURAL CONTROL MEASURES, AND LOCATIONS WHERE VEHICLES ENTER OR EXIT THE SITE. A STORMWATER POLLUTION PREVENTION PLAN INSPECTION REPORT SHALL BE COMPLETED AND ADDED TO THE SWPPP. RAINFALL SHALL BE RECORDED ON THE SWPPP RAINFALL LOG. CONTRACTOR SHALL IMMEDIATELY ARRANGE FOR REPAIR OR REPLACEMENT OF ANY DAMAGED OR DEFICIENT CONTROL MEASURES OBSERVED DURING THE INSPECTION.

QUALIFIED PERSONNEL MEANS A PERSON KNOWLEDGEABLE IN THE PRINCIPLES AND PRACTICES OF EROSION AND SEDIMENT CONTROL MEASURES, SUCH AS A LICENSED PROFESSIONAL ENGINEER, A CERTIFIED PROFESSIONAL IN EROSION AND SEDIMENT CONTROL, A CERTIFIED EROSION SEDIMENT OR STORMWATER INSPECTOR, OR OTHER TRAINED INDIVIDUAL.

6.0 SPILL PREVENTION

6.1 GENERAL MATERIAL MANAGEMENT PRACTICES

THE GOOD HOUSEKEEPING PRACTICES LISTED BELOW SHALL BE FOLLOWED THROUGHOUT THE CONSTRUCTION PROJECT.

1. CONTRACTOR SHALL STORE ONLY ENOUGH PRODUCTS REQUIRED TO COMPLETE THIS PROJECT.
2. ALL MATERIAL SHALL BE STORED IN A NEAT, ORDERLY MANNER IN THEIR ORIGINAL CONTAINERS CONTAINING MANUFACTURER'S LABEL.
3. MANUFACTURERS' RECOMMENDATIONS FOR PROPER USE AND DISPOSAL SHALL BE FOLLOWED.
4. MATERIALS REQUIRED TO HAVE A MATERIAL SAFETY DATA SHEET (MSDS) SHALL HAVE A COPY STORED IN THE PROJECT'S MSDS DATABASE.

6.2 SPILL CONTROL PRACTICES

THE PRACTICES LISTED BELOW SHALL BE FOLLOWED FOR SPILL PREVENTION AND CLEANUP.

1. MATERIALS AND EQUIPMENT NECESSARY FOR SPILL CLEANUP SHALL BE MAINTAINED ONSITE.
2. IMMEDIATELY UPON DISCOVERY, ALL SPILLS SHALL BE CLEANED UP ACCORDING TO THE MANUFACTURERS' RECOMMENDED METHODS.
3. PERSONNEL CLEANING UP A SPILL SHALL USE PERSONAL PROTECTIVE EQUIPMENT.
4. IMMEDIATELY UPON DISCOVERY, SPILLS OF TOXIC OR HAZARDOUS MATERIALS SHALL BE REPORTED TO THE OWNER AND GENERAL CONTRACTOR.
5. NOTIFICATION AND REPORTING TO THE APPROPRIATE FEDERAL, STATE, AND LOCAL GOVERNMENT AGENCIES SHALL BE MADE AS REQUIRED.

GENERAL INFORMATION:

THIS STORMWATER POLLUTION PREVENTION PLAN (SWPPP) HAS BEEN DEVELOPED TO FULFILL ONE OF THE REQUIREMENTS OF THE GENERAL ENVIRONMENTAL PROTECTION AGENCY (EPA) NATIONAL POLLUTION DISCHARGE ELIMINATION SYSTEM (WISCONSIN POLLUTION DISCHARGE ELIMINATION SYSTEM "WPDES" PERMIT) FOR THE DISCHARGE OF STORMWATER ASSOCIATED WITH CONSTRUCTION PROJECTS DISTURBING ONE ACRE OR MORE. THE OWNER AND CONTRACTORS SHALL COMPLY WITH ALL REQUIREMENTS OF THE WPDES FOR ALL SUCH CONSTRUCTION PROJECTS. THE STORMWATER DISCHARGES ASSOCIATED WITH THE CONSTRUCTION ACTIVITY FROM THIS SITE ARE SUBJECT TO THE CONDITIONS AND REQUIREMENTS OF THE PERMITS.

THE EXECUTED OWNER CERTIFICATION AND THE CONTRACTOR CERTIFICATIONS SHALL BE KEPT ONSITE WITH THE APPROVED PLANS.

SWPPP AVAILABILITY:

THE OWNER SHALL RETAIN A COPY OF THE SWPPP AT THE CONSTRUCTION SITE FROM THE DATE OF THE PROJECT INITIATION TO THE DATE OF FINAL STABILIZATION.

KEEPING PLANS CURRENT:

THE CONTRACTOR SHALL AMEND THE PLAN WHENEVER THERE IS A CHANGE IN DESIGN, CONSTRUCTION, OPERATION, OR MAINTENANCE, WHICH HAS A SIGNIFICANT EFFECT ON THE POTENTIAL FOR THE DISCHARGE OF POLLUTANTS TO THE WATERS OF THE STATE AND WHICH HAS NOT OTHERWISE BEEN ADDRESSED IN THE PLAN OR IF THE PLAN PROVES TO BE INEFFECTIVE IN ELIMINATING OR SIGNIFICANTLY CONTROLLING POLLUTANTS IN STORMWATER DISCHARGES ASSOCIATED WITH CONSTRUCTION SITE ACTIVITY. IN ADDITION, THE THE PLAN SHALL BE AMENDED TO IDENTIFY ANY NEW CONTRACTOR AND/OR SUBCONTRACTOR THAT WILL IMPLEMENT A MEASURE OF THE PLAN. AMENDMENTS TO THE PLAN MAY BE REQUIRED BY THE MUNICIPALITY, OWNER, OR OTHER REVIEWING AGENCY. COPIES OF THE AMENDMENTS SHALL BE KEPT ONSITE AS PART OF THE SWPPP.

RETENTION OF RECORDS:

THE OWNER SHALL RETAIN COPIES OF THIS AND ALL REPORTS AND NOTICES REQUIRED BY THIS PERMIT, AND RECORDS OF ALL DATA USED TO COMPLETE THE NOTICE OF INTENT TO BE COVERED BY THIS PERMIT, FOR A PERIOD OF AT LEAST THREE YEARS FROM THE DATE PERMIT COVERAGE EXPIRES OR IS TERMINATED. THIS PERIOD MAY BE EXTENDED BY THE REQUEST OF THE AGENCY AT ANY TIME. IN ADDITION, THE OWNER SHALL RETAIN A COPY OF THE PLAN REQUIRED BY THIS PERMIT AT THE CONSTRUCTION SITE FROM THE DATE OF PROJECT INITIATION TO THE DATE OF FINAL STABILIZATION.

A NOTICE OF INTENT (NOI) APPLICATION MUST BE COMPLETED AND INCORPORATED INTO THE SWPPP.

WPDES NOTICE OF TERMINATION GUIDANCE:

WHEN A SITE HAS BEEN FINALLY STABILIZED AND ALL STORMWATER DISCHARGES FROM CONSTRUCTION SITES THAT ARE AUTHORIZED BY THE PERMIT ARE ELIMINATED, THE OWNER OF THE FACILITY MUST SUBMIT A COMPLETED NOTICE OF TERMINATION THAT IS SIGNED IN ACCORDANCE WITH THE PERMIT. CONTRACTOR SHALL SUBMIT A COMPLETED NOTICE OF TERMINATION TO OWNER FOR EXECUTION PRIOR TO THEIR FINAL PAY APPLICATION REQUEST.

CONTROL MEASURE GROUP	CONTROL MEASURE	CONTROL MEASURE CHARACTERISTICS
VEGETATIVE SOIL COVER	TEMPORARY SEEDING	PROVIDES QUICK TEMPORARY COVER TO CONTROL EROSION WHEN PERMANENT SEEDING IS NOT DESIRED OR TIME OF YEAR IS INAPPROPRIATE.
	PERMANENT SEEDING	PROVIDES PERMANENT VEGETATIVE COVER TO CONTROL EROSION, FILTERS SEDIMENT FROM WATER. MAY BE PART OF FINAL LANDSCAPE PLAN.
NON VEGETATIVE SOIL COVER	AGGREGATE COVER	PROVIDES TEMPORARY COVER ON ROADS AND PARKING LOTS AND AREAS WHERE VEGETATION CANNOT BE ESTABLISHED. PREVENTS MUD FROM BEING PICKED UP AND TRANSPORTED OFF-SITE.
	PAVING	PROVIDES PERMANENT COVER ON PARKING LOTS AND ROADS OR OTHER AREAS WHERE VEGETATION CANNOT BE ESTABLISHED.
DIVERSIONS	DIVERSION BERM / SWALE	DIVERTS RUNOFF TO A SEDIMENT TRAP OR OTHER CONTROL.
ENCLOSED DRAINAGE	STORM SEWER	CONVEYS SEDIMENT LADEN WATER TO A SEDIMENT BASIN.
OUTLETS	APRON ENDWALL OR RIPRAP	PROTECTS DOWNSTREAM CHANNEL FROM HIGH VELOCITY OF FLOW DISCHARGING FROM STRUCTURE.
SEDIMENT BASINS	TEMPORARY SEDIMENT TRAP	CONSTRUCTED TO REMOVE SILTATION FROM RUNOFF FROM SITE DIVERSION BERMS/SWALES AND IN OVERLAND FLOOD ROUTE. CAN BE CONVERTED TO PERMANENT SEDIMENT BASIN.
SEDIMENT FILTERS	SILT FENCE	PLACED DOWN SLOPE OF DISTURBED AREA TO KEEP RUNOFF CONTAINED ON-SITE.
	INLET PROTECTION	INSTALLED IN OPEN GRATE STRUCTURES TO COLLECT SEDIMENT.
	STRAW WATTLES	PLACED IN DRAINAGE CHANNELS TO FILTER SEDIMENT FROM RUNOFF.
MUD AND DUST CONTROL	CONSTRUCTION ENTRANCE	REDUCES SOIL EROSION POLLUTANTS BEING TRANSPORTED OFF-SITE.
	STREET SWEEPING	REDUCES POLLUTANTS TRACKED FROM CONSTRUCTION SITE.
	DUST CONTROL	PREVENTS DUST FROM LEAVING CONSTRUCTION SITE.

STABILIZATION EFFECTIVENESS (TIME OF YEAR)

STABILIZATION TYPE	STABILIZATION UTILIZATION PERIODS											
	JAN.	FEB.	MAR.	APR.	MAY	JUNE	JULY	AUG.	SEPT.	OCT.	NOV.	DEC.
PERMANENT SEEDING			A →	* →	* →	* →	* →	* →	* →			
DORMANT SEEDING	B →	→									B →	→
TEMPORARY SEEDING			C →	* →	* →	* →	D * →	* →	* →			
SODDING			E →	* →	* →	* →	* →	* →	* →			

A. KENTUCKY BLUEGRASS 90 LBS/ACRE MIXED WITH PERENNIAL RYEGRASS 30 LBS/ACRE.
B. KENTUCKY BLUEGRASS 135 LBS/ACRE MIXED WITH PERENNIAL RYEGRASS 45 LBS/ACRE + 2 TONS STRAW MULCH/ACRE.
C. SPRING OATS 100 LBS/ACRE.
D. WHEAT OR CEREAL RYE 150 LBS/ACRE.
E. SOD.
F. STRAW MULCH 2 TONS/ACRE.
* IRRIGATION/WATERING REQUIRED TO SUPPORT ESTABLISHMENT AS NEEDED.

DRAFTED: EP
DESIGNED: DCC
REVIEWED: ####

PLAN I DESIGN I DELIVER
www.pinnacle-engr.com
PINNACLE ENGINEERING GROUP
ENGINEERING I NATURAL RESOURCES I SURVEYING
WISCONSIN OFFICE:
15850 W. BLUEMOUND ROAD
BROOKFIELD, WI 53005
(262) 754-8888
CHICAGO I MILWAUKEE : NATIONWIDE

LAKEVIEW LOT 40
PLEASANT PRAIRIE, WI

CONSTRUCTION DETAILS

REVISIONS

PEG JOB No 559.00A-WI
PEG PM MAC
START DATE 07/11/16
SCALE NTS

SHEET C-7 OF C-9

© COPYRIGHT 2015

www.pinnacle-engr.com

FOR REVIEW ONLY

CONSTRUCTION DETAILS

Z:\PROJECTS\2015\559.00A-WI\CAD\SHEETS\559.00A-WI CONSTRUCTION DETAILS.DWG

THESE PLANS AND DESIGNS ARE COPYRIGHT PROTECTED AND MAY NOT BE USED IN WHOLE OR IN PART WITHOUT THE WRITTEN CONSENT OF PINNACLE ENGINEERING GROUP, LLC

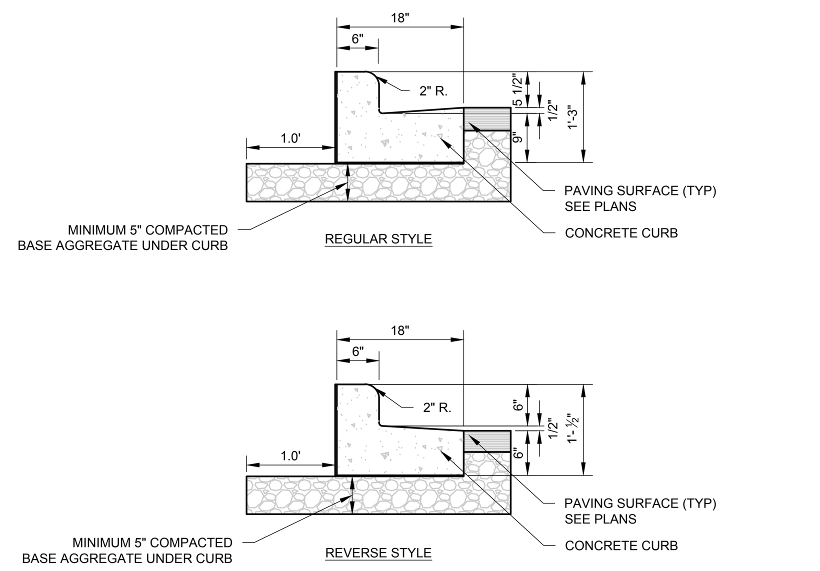

NOTES:

1. LATERAL CONTRACTION JOINTS SHALL BE PLACED AT INTERVALS OF NOT MORE THAN 15 FEET NOR LESS THAN 6 FEET. THE JOINTS SHALL BE A MINIMUM OF 3 INCHES IN DEPTH.
2. EXPANSION JOINTS SHALL BE PLACED TRANSVERSELY AT RADIUS POINTS ON CURVES OF RADIUS 200 FEET OR LESS, AND AT ANGLE POINTS, OR AS DIRECTED BY THE ENGINEER OF RECORD. THE EXPANSION JOINTS FILLER SHALL BE A ONE PIECE FIBERBOARD OR THE APPROVED EQUIVALENT MATERIAL HAVING THE SAME DIMENSIONS AS CURB & GUTTER AT THAT STATION AND BE 0.5 INCH THICK.
3. IN ALL CASES, CONCRETE CURB & GUTTER SHALL BE PLACED ON THOROUGHLY COMPACTED CRUSHED STONE.
4. REVERSE STYLE CURB LOCATIONS ARE NOTED ON THE PLANS.

18" VERTICAL FACE CURB

#602-WI 12-14-12

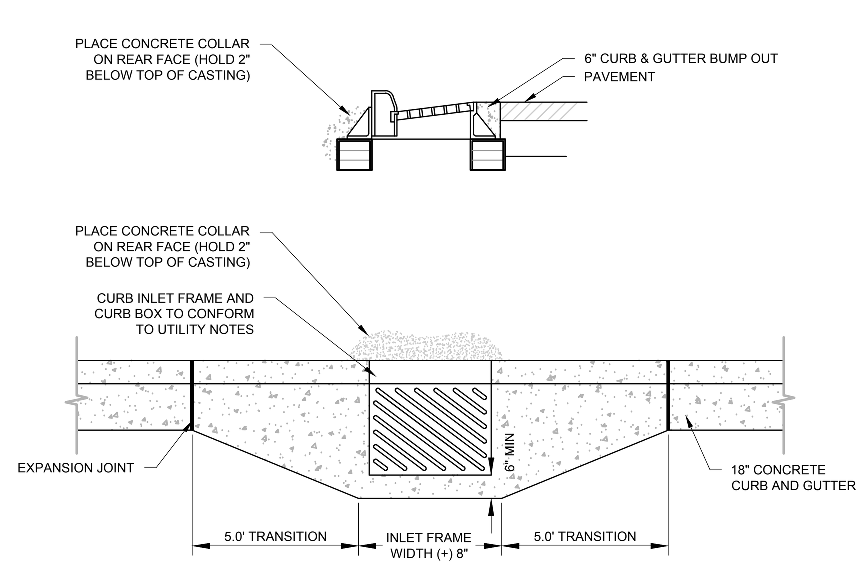

NOTE : CURB CONTRACTOR TO VERIFY POSITION AND ELEVATION OF FRAME AND GRATE PRIOR TO POUR. IF NOT CORRECT, FIVE (5) FOOT TRANSITION AREA TO BE LEFT UNPOURED UNTIL SITUATION IS CORRECTED BY CONTRACTOR.

CURB AND GUTTER BUMP OUT

#622 10-10-12

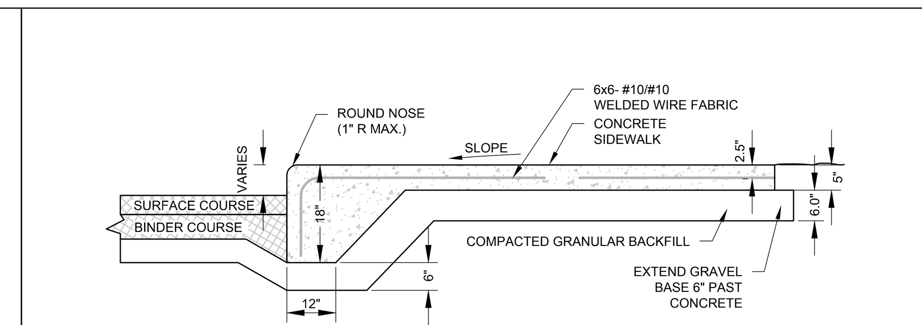

INTEGRAL CURB AND SIDEWALK

#617 12-28-12

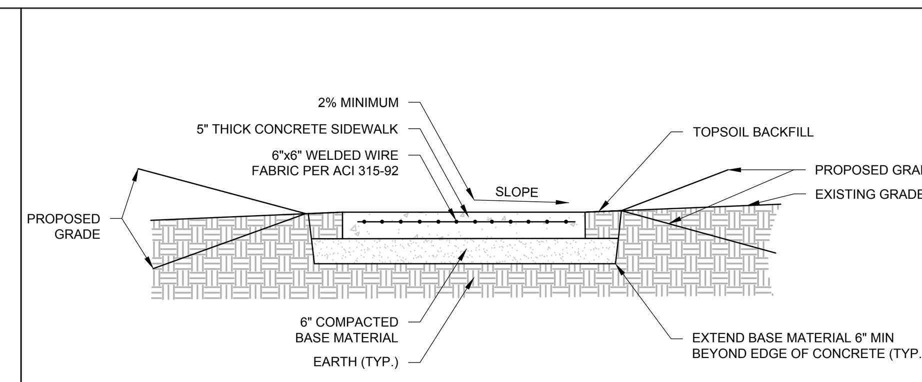

CONCRETE SIDEWALK

#507 10-11-12

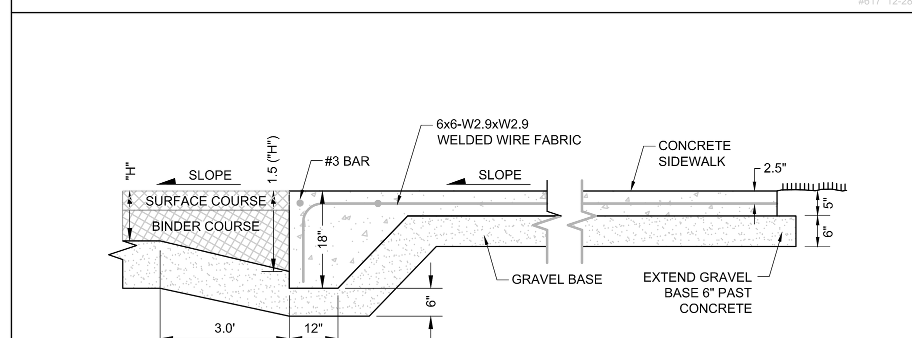

WALK FLUSH WITH PAVEMENT

#624 4/30/12

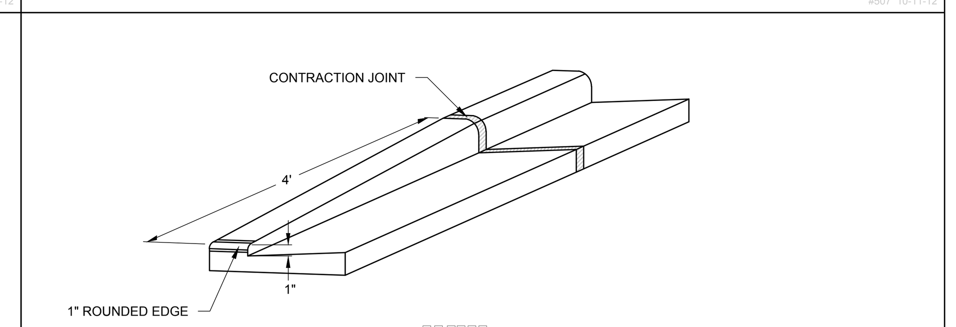

1. CONTRACTION JOINTS SHALL BE PLACED EVERY 10 FEET
2. EXPANSION JOINTS (3/4" EXPANSION FIBER MATERIAL) SHALL BE PLACED EVERY 300 FEET AND AT EVERY PC/PT AND 3 FEET FROM STRUCTURES

TAPER CURB HEAD

#623 10-11-12

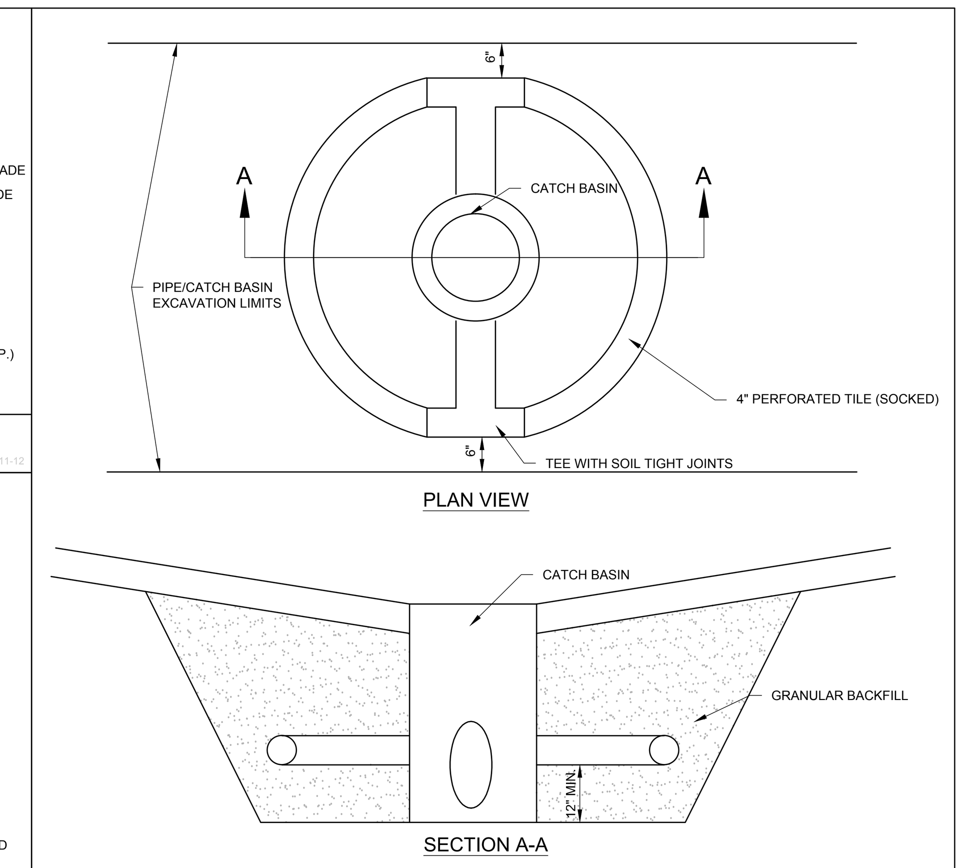

CATCH BASIN - UNDERDRAIN

DETAIL NUMBER AND REVISION DATE

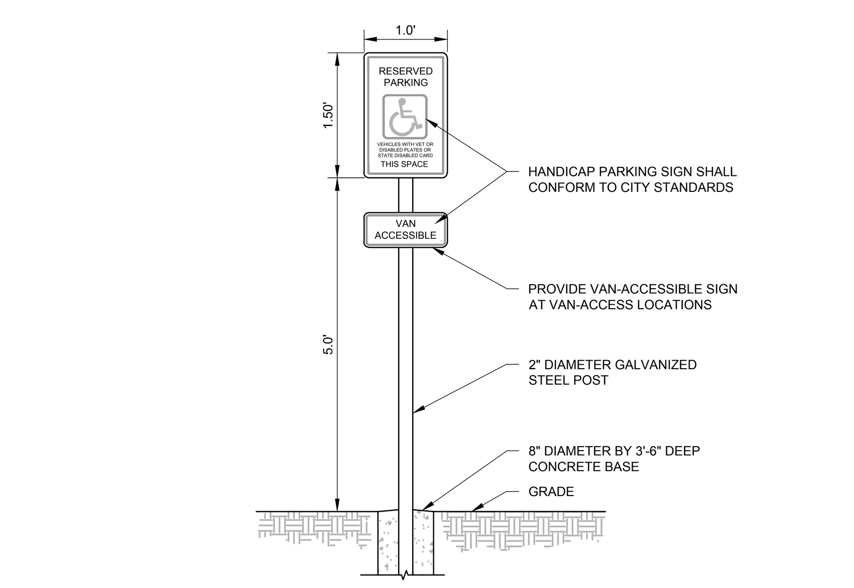

ADA SIGN

#706 10-11-12

	MIN.	MAX.
A	1.6"	2.4"
B	0.65"	1.5"
C	*	*
D	0.9"	1.4"

* THE C DIMENSION IS 50% TO 65% OF THE D DIMENSION

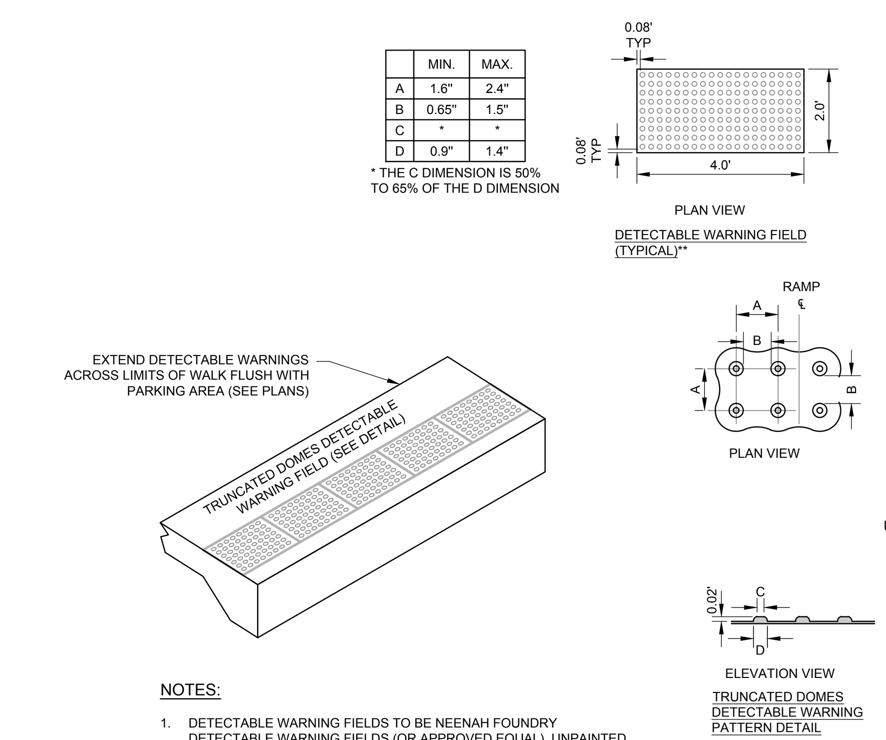

NOTES:

1. DETECTABLE WARNING FIELDS TO BE NEENAH FOUNDRY DETECTABLE WARNING FIELDS (OR APPROVED EQUAL), UNPAINTED NATURAL COLOR AND FIELD WEATHERED PRIOR TO INSTALLATION (VERIFY COLOR WITH OWNER PRIOR TO INSTALLATION.

DETECTABLE WARNING TRUNCATED DOMES

#705 4/30/13

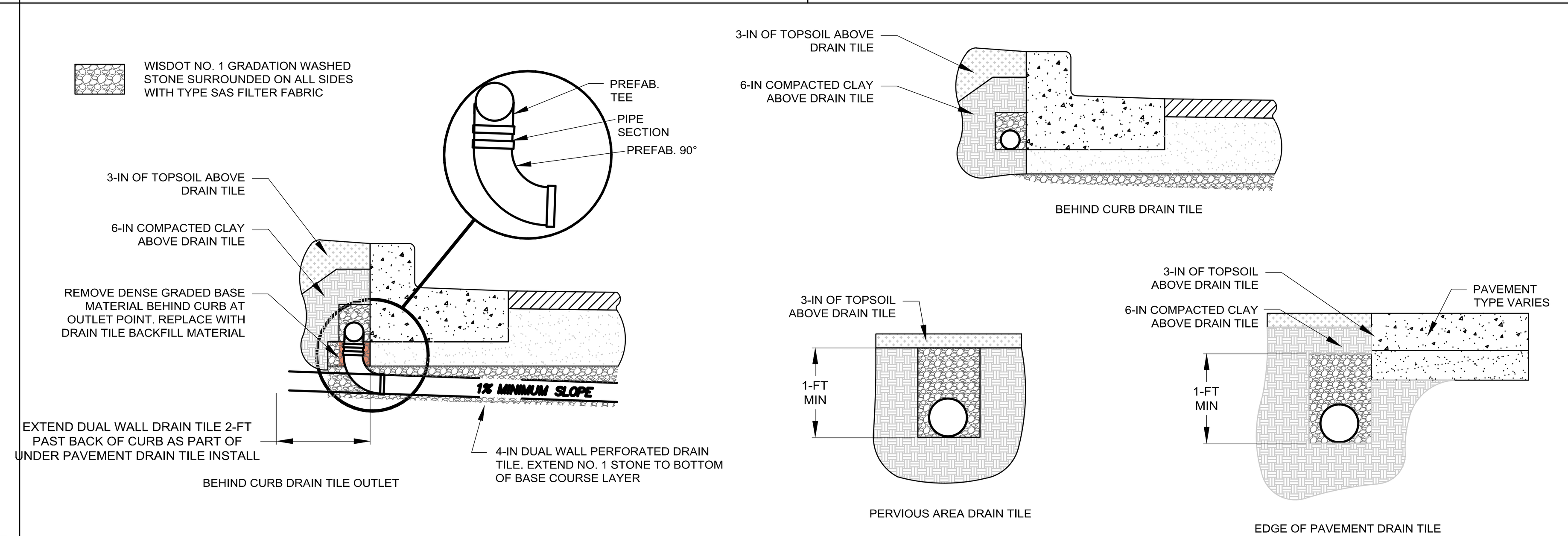

DRAIN TILE GENERAL SPECIFICATIONS

1. THE DRAIN TILE CONDUIT AND FITTINGS SHALL MEET STRENGTH AND DURABILITY REQUIREMENTS FOR THE SITE. ALL CONDUITS AND FITTINGS SHALL MEET OR EXCEED THE MINIMUM REQUIREMENTS OF THE APPROPRIATE SPECIFICATIONS PUBLISHED BY THE AMERICAN SOCIETY FOR TESTING AND MATERIALS. CORRUGATED HIGH DENSITY POLYETHYLENE (HDPE) CONDUIT AND FITTINGS SHALL MEET THE REQUIREMENTS OF ASTM M252. CONDUIT TYPE (SINGLE WALL OR DUAL WALL) SHALL INSTALLED PER THE LOCATIONS SHOWN IN THE PLANS. CONTRACTOR MAY SUBSTITUTE DUAL WALL CONDUIT AT LOCATIONS SPECIFIED FOR SINGLE WALL CONDUIT AT THE SOLE EXPENSE OF THE CONTRACTOR.
   - SINGLE WALL CONDUIT SHALL BE TYPE CP WITH CLASS II PERFORATION PATTERN.
   - DUAL WALL CONDUIT SHALL BE TYPE SP WITH A SMOOTH INTERIOR THAT CARRIES A MAXIMUM MANNING'S "N" VALUE OF 0.12 WITH CLASS II PERFORATION PATTERN.
2. ALL DRAIN TILE CONSTRUCTION MUST BE PROVIDED WITH TRACER WIRE OR OTHER APPROVED METHODS IN ORDER TO BE LOCATED IN ACCORD WITH 182.0715(2R) OF THE STATUTES. CONTRACTOR SHALL PROVIDE THE ENGINEER NOTICE OF LOCATION METHOD PRIOR TO THE START OF CONSTRUCTION.
3. A MAXIMUM TRENCH WIDTH OF 2-FT SHALL BE MAINTAINED FOR ALL DRAIN TILE INSTALLATION WITH THE EXCEPTION OF CONNECTION POINTS TO THE EXISTING STORM SEWER SYSTEM IN WHICH CASE THE CONTRACTOR SHALL LIMIT DISTURBANCE AS POSSIBLE.
4. THE MINIMUM DEPTH OF COVER (FINISH GRADE TO TOP PIPE) SHALL BE:
   - CONCRETE PAVED AREAS - 2.0-FT
   - ASPHALT PAVED AREAS - 2.5-FT
   - BEHIND CURB - 0.5-FT
   - OTHER LANDSCAPED/GRASS/PERVIOUS AREAS - 2.0-FT
5. CONNECTION TO THE EXISTING STORM SEWER SYSTEM SHALL ACHIEVED BY CORING THE EXISTING REINFORCED CONCRETE STORM SEWER STRUCTURES OR PIPING TO THE DIAMETER NECESSARY TO ACCOMMODATE A PERMANENT CONNECTION. ALL CONNECTIONS TO THE EXISTING REINFORCED CONCRETE STORM SEWER SHALL BE ACHIEVED BY THE USE OF KOR-N-SEAL CONNECTORS, OR EQUAL.
6. FOR TRENCH INSTALLATIONS OF CORRUGATED PLASTIC CONDUIT (OTHER THAN BEHIND CURB LOCATIONS), THE FOLLOWING BEDDING METHODS ARE REQUIRED:
   - A STONE BEDDING LAYER, AT LEAST 3 IN. THICK, USING A CLEAR STONE SHALL BE INSTALLED TO PROVIDE CONDUIT SUPPORT.
   - COMPACT BEDDING MATERIAL BESIDE AND TO THE UPPER (TOP) LIMITS OF BASE COURSE IN PAVED AREAS OR TOP OF CLAY (BOTTOM OF TOPSOIL LAYER) ABOVE THE CONDUIT..
7. ANY HARD OBJECTS LARGER THAN 1.5 IN. IN DIAMETER EXPOSED WITHIN THE TRENCH BOTTOM OR WALLS SHALL BE REMOVED TO PREVENT UNDUE STRESSES ON THE CONDUIT AND FITTINGS.
8. PRE MANUFACTURED FITTINGS (SUCH AS: WYES, TEES, BENDS, CAPS, ETC) OF THE SAME MATERIAL AS THE CONDUIT SHALL BE USED AT ALL CONNECTIONS AND DEFLECTIONS GREATER THAN 22.5 DEGREES.
9. IF NOT CONNECTED TO A STRUCTURE, THE UPPER END OF EACH SUBSURFACE DRAIN TILE SHALL BE CAPPED WITH A TIGHT-FITTING EXTERNAL CAP OF THE SAME MATERIAL AS THE CONDUIT.
10. AT ALL TIMES THE DRAIN TILE SYSTEM SHALL BE KEPT CLEAN AND PROTECTED AGAINST UNDERMINING OF THE CAPACITY OF THE CONDUIT AND DAMAGE DURING CONSTRUCTION. TYPICAL CAPACITY UNDERMINING INCLUDES ENTRY OF CONSTRUCTION MATERIALS, TRASH, AND RODENTS INTO THE CONDUIT.

DRAINTILE

DRAIN TILE SPECIFICATIONS

1. THE DRAIN TILE CONDUIT AND FITTINGS SHALL MEET STRENGTH AND DURABILITY REQUIREMENTS FOR THE SITE. ALL CONDUITS AND FITTINGS SHALL MEET OR EXCEED THE MINIMUM REQUIREMENTS OF THE APPROPRIATE SPECIFICATIONS PUBLISHED BY THE AMERICAN SOCIETY FOR TESTING AND MATERIALS. CORRUGATED HIGH DENSITY POLYETHYLENE (HDPE) CONDUIT AND FITTINGS SHALL MEET THE REQUIREMENTS OF ASTM M252. CONDUIT TYPE (SINGLE WALL OR DUAL WALL) SHALL INSTALLED PER THE LOCATIONS SHOWN IN THE PLANS. CONTRACTOR MAY SUBSTITUTE DUAL WALL CONDUIT AT LOCATIONS SPECIFIED FOR SINGLE WALL CONDUIT AT THE SOLE EXPENSE OF THE CONTRACTOR.
   - SINGLE WALL CONDUIT SHALL BE TYPE CP WITH CLASS II PERFORATION PATTERN.
   - DUAL WALL CONDUIT SHALL BE TYPE SP WITH A SMOOTH INTERIOR THAT CARRIES A MAXIMUM MANNING'S "N" VALUE OF 0.12 WITH CLASS II PERFORATION PATTERN.
2. ALL DRAIN TILE CONSTRUCTION MUST BE PROVIDED WITH TRACER WIRE OR OTHER APPROVED METHODS IN ORDER TO BE LOCATED IN ACCORD WITH 182.0715(2R) OF THE STATUTES. CONTRACTOR SHALL PROVIDE THE ENGINEER NOTICE OF LOCATION METHOD PRIOR TO THE START OF CONSTRUCTION.
3. A MAXIMUM TRENCH WIDTH OF 2-FT SHALL BE MAINTAINED FOR ALL DRAIN TILE INSTALLATION WITH THE EXCEPTION OF CONNECTION POINTS TO THE EXISTING STORM SEWER SYSTEM IN WHICH CASE THE CONTRACTOR SHALL LIMIT DISTURBANCE AS POSSIBLE.
4. THE MINIMUM DEPTH OF COVER (FINISH GRADE TO TOP PIPE) SHALL BE:
   - CONCRETE PAVED AREAS - 2.0-FT
   - ASPHALT PAVED AREAS - 2.5-FT
   - BEHIND CURB - 0.5-FT
   - OTHER LANDSCAPED/GRASS/PERVIOUS AREAS - 2.0-FT
5. CONNECTION TO THE EXISTING STORM SEWER SYSTEM SHALL ACHIEVED BY CORING THE EXISTING REINFORCED CONCRETE STORM SEWER STRUCTURES OR PIPING TO THE DIAMETER NECESSARY TO ACCOMMODATE A PERMANENT CONNECTION. ALL CONNECTIONS TO THE EXISTING REINFORCED CONCRETE STORM SEWER SHALL BE ACHIEVED BY THE USE OF KOR-N-SEAL CONNECTORS, OR EQUAL.
6. FOR TRENCH INSTALLATIONS OF CORRUGATED PLASTIC CONDUIT (OTHER THAN BEHIND CURB LOCATIONS), THE FOLLOWING BEDDING METHODS ARE REQUIRED:
   - A STONE BEDDING LAYER, AT LEAST 3 IN. THICK, USING A CLEAR STONE SHALL BE INSTALLED TO PROVIDE CONDUIT SUPPORT.
   - COMPACT BEDDING MATERIAL BESIDE AND TO THE UPPER (TOP) LIMITS OF BASE COURSE IN PAVED AREAS OR TOP OF CLAY (BOTTOM OF TOPSOIL LAYER) ABOVE THE CONDUIT..
7. ANY HARD OBJECTS LARGER THAN 1.5 IN. IN DIAMETER EXPOSED WITHIN THE TRENCH BOTTOM OR WALLS SHALL BE REMOVED TO PREVENT UNDUE STRESSES ON THE CONDUIT AND FITTINGS.
8. PRE MANUFACTURED FITTINGS (SUCH AS: WYES, TEES, BENDS, CAPS, ETC) OF THE SAME MATERIAL AS THE CONDUIT SHALL BE USED AT ALL CONNECTIONS AND DEFLECTIONS GREATER THAN 22.5 DEGREES.
9. IF NOT CONNECTED TO A STRUCTURE, THE UPPER END OF EACH SUBSURFACE DRAIN TILE SHALL BE CAPPED WITH A TIGHT-FITTING EXTERNAL CAP OF THE SAME MATERIAL AS THE CONDUIT.
10. AT ALL TIMES THE DRAIN TILE SYSTEM SHALL BE KEPT CLEAN AND PROTECTED AGAINST UNDERMINING OF THE CAPACITY OF THE CONDUIT AND DAMAGE DURING CONSTRUCTION. TYPICAL CAPACITY UNDERMINING INCLUDES ENTRY OF CONSTRUCTION MATERIALS, TRASH, AND RODENTS INTO THE CONDUIT.

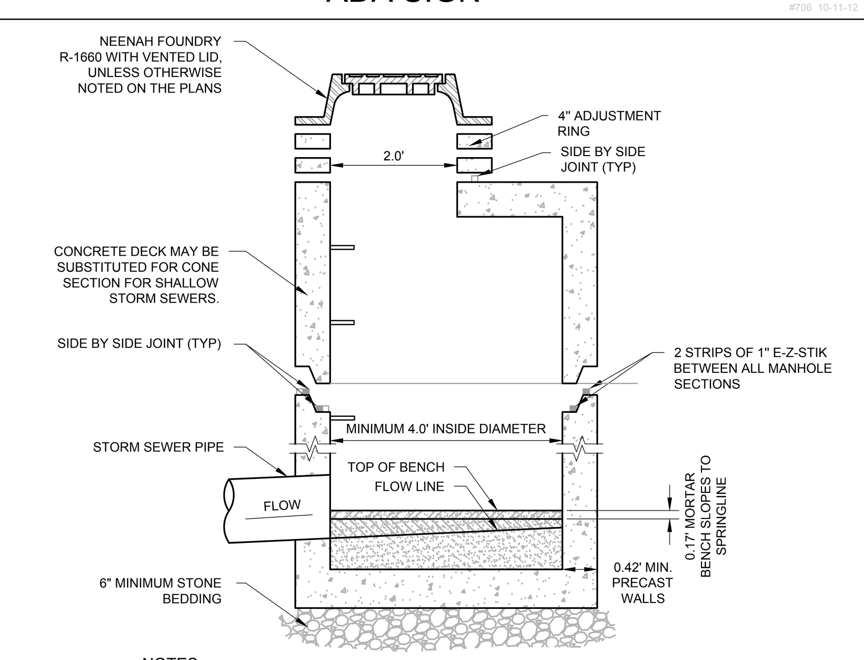

NOTES:

1. CLEAN UNDERSIDE OF ADJUSTING RING OR CAST IRON FRAME AND SET IN PLACE.
2. TUCK POINT MORTAR INTO ANNULAR CRACK AND BACKPLASTERED INSIDE AND OUTSIDE OF ALL JOINTS.
3. THE FLAT TOP MAY BE USED IN LIEU OF THE TAPERED TOP WHEN FIELD CONDITIONS PROHIBIT THE USE OF A FLAT TAPERED TOP.
4. MANHOLE CONSTRUCTION TO MEET REQUIREMENTS OF ASTM C478.
5. ECCENTRIC CONE SECTION OF MANHOLE TO BE SET OUTSIDE OF VEHICULAR WHEEL PATH NEAR ℄ OF ROADWAY.

STORM SEWER MANHOLE

#301 04/26/13

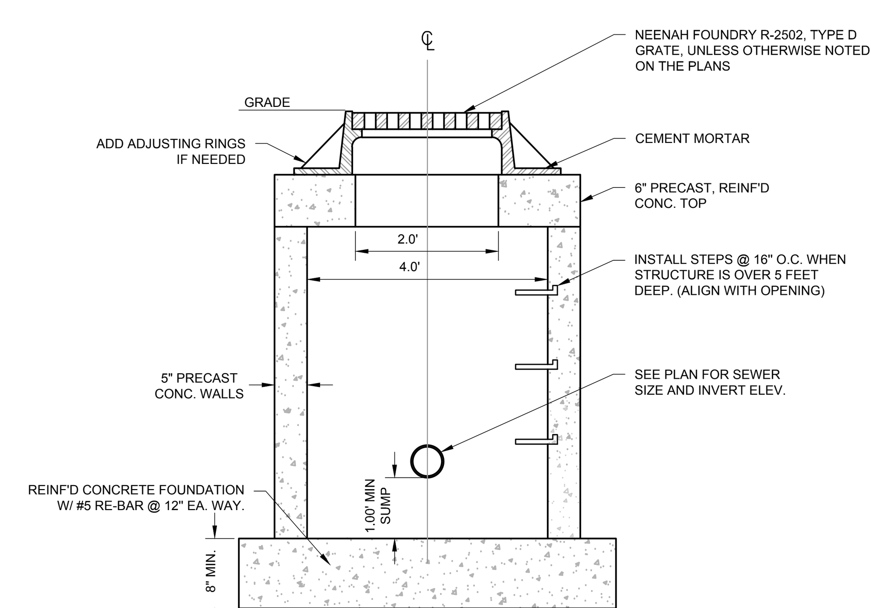

NOTES:

1. EASY STICK, RUBBER GASKET OR APPROVED EQUIVALENT SHALL BE PLACED AT ALL JOINTS BETWEEN ADJUSTING RINGS FOR STORM CATCH BASINS.
2. THE FLAT TOP MAY BE USED IN LIEU OF THE TAPERED TOP WHEN FIELD CONDITIONS PROHIBIT USE OF A TAPERED TOP.
3. STRUCTURE TO BE 4.0' DIA. OR AS INDICATED ON THE PLANS.

CATCH BASIN

#302 10-04-12

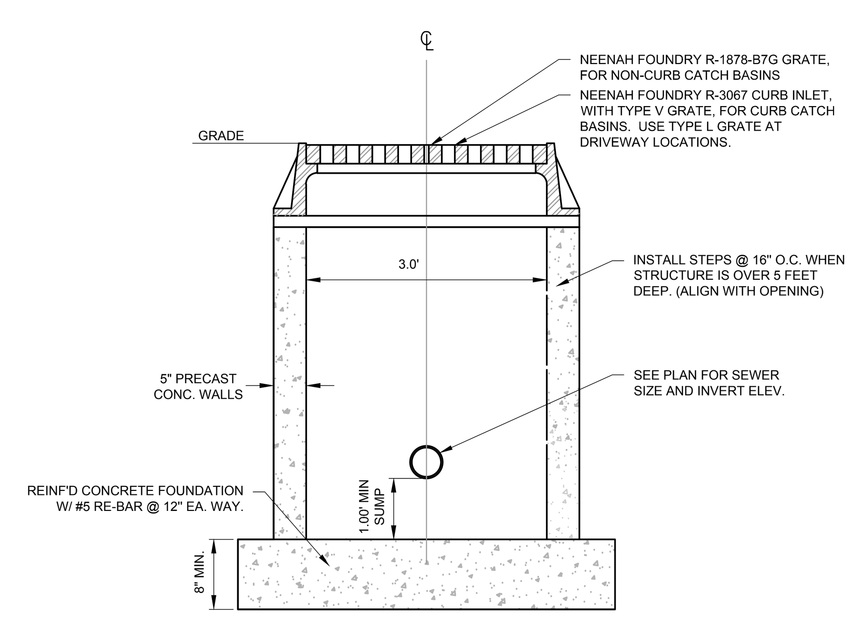

NOTES:

1. EASY STICK, RUBBER GASKET OR APPROVED EQUIVALENT SHALL BE PLACED AT ALL JOINTS BETWEEN ADJUSTING RINGS FOR STORM CATCH BASINS.
2. THE FLAT TOP MAY BE USED IN LIEU OF THE TAPERED TOP WHEN FIELD CONDITIONS PROHIBIT USE OF A TAPERED TOP.

2' x 3' CATCH BASIN

#306 06/04/14

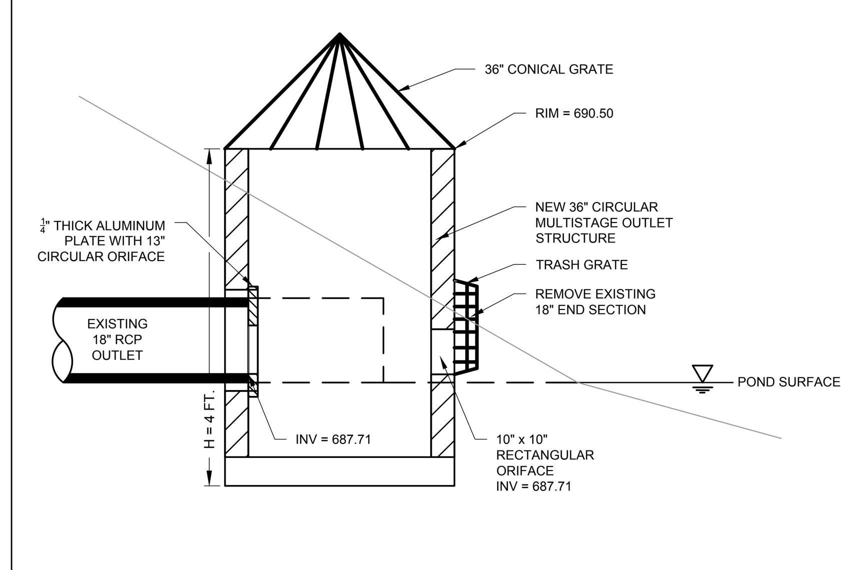

NORTH POND OUTLET DETAIL

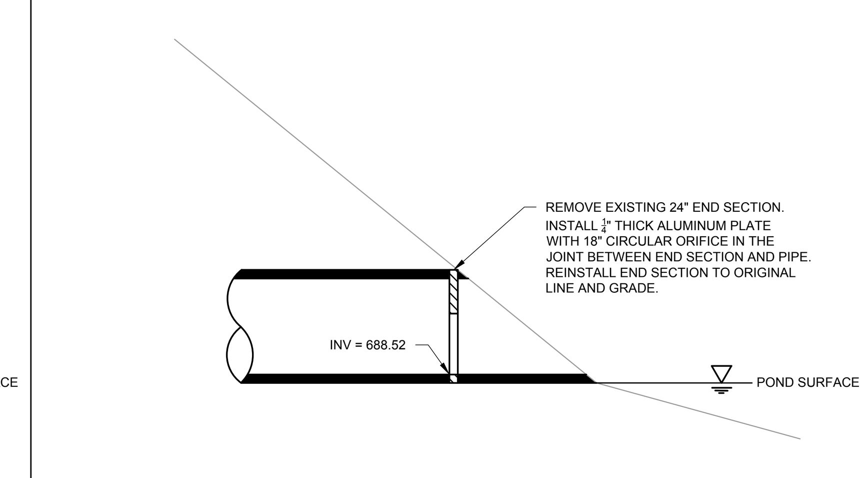

SOUTH POND OUTLET DETAIL

FOR REVIEW ONLY

www.pinnacle-engr.com

REVIEWED: ####
DESIGNED: DCC
DRAFTED: EP

PLAN I DESIGN I DELIVER
www.pinnacle-engr.com

PINNACLE ENGINEERING GROUP
ENGINEERING I NATURAL RESOURCES I SURVEYING

WISCONSIN OFFICE:
15850 W. BLUEMOUND ROAD
BROOKFIELD, WI 53005
(262) 754-8888
CHICAGO I MILWAUKEE : NATIONWIDE

LAKEVIEW LOT 40
PLEASANT PRAIRIE, WI

CONSTRUCTION DETAILS

REVISIONS

PEG JOB No 559.00A-WI
PEG PM MAC
START DATE 07/11/16
SCALE NTS

SHEET C-8 OF C-9

© COPYRIGHT 2015

CONSTRUCTION DETAILS

Z:\PROJECTS\2015\559.00A-WI\CAD\SHEETS\559.00A-WI CONSTRUCTION DETAILS.DWG

THESE PLANS AND DESIGNS ARE COPYRIGHT PROTECTED AND MAY NOT BE USED IN WHOLE OR IN PART WITHOUT THE WRITTEN CONSENT OF PINNACLE ENGINEERING GROUP, LLC

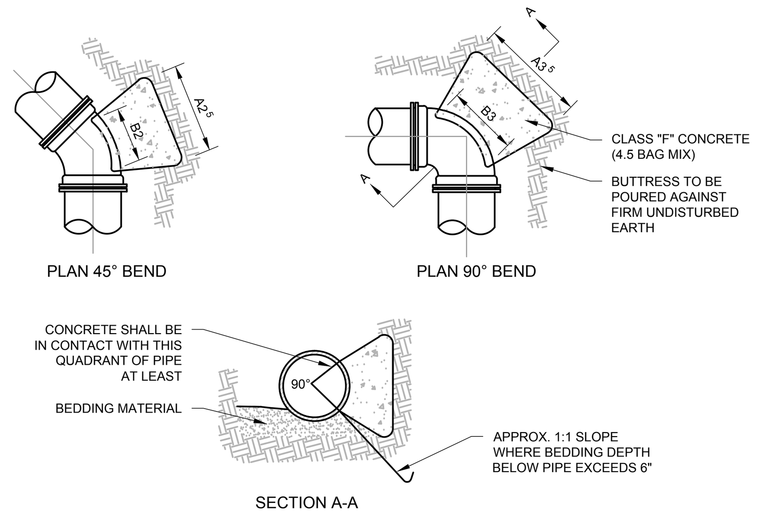

PIPE	22 1/2° BENDS		45° BENDS		90° BENDS	
SIZE	A1	B1	A2	B2	A3	B3
6"	1-'0"	1-'0"	1-'0"	1-'0"	1-'4"	1-'2"
8"	1'-0"	1'-0"	1'-4"	1'-2"	1'-10"	1'-6"
12"	1'-4"	1'-4"	1'-10"	1'-10"	2'-8"	2'-3"
16"	1'-10"	1'-8"	2'-6"	2'-4"	3'-10"	2'-10"
20"	2'-4"	2'-0"	3'-3"	2'-10"	5'-0"	3'-4"
24"	2'-10"	2'-4"	4'-0"	3'-3"	6'-4"	3'-10"
30"	3'-6"	3'-0"	5'-4"	3'-10"	8'-0"	4'-8"

NOTES:

1. PROVIDE THRUST BLOCKING TO PREVENT MOVEMENT OF LINES UNDER PRESSURE AT BENDS, TEES, CAPS, VALVES, HYDRANTS, AND AT POINTS SPECIFIED BY THE ENGINEER
2. ALL BLOCKING SHALL BE WITH POURED CLASS SI CONCRETE AGAINST UNDISTURBED VERTICAL EARTH SURFACE
3. THRUST BLOCKS TO BE AT ALL BENDS 11¼° OR GREATER
4. THE COST OF INSTALLING THE THRUST BLOCK SHALL BE INCIDENTAL TO THE CONSTRUCTION OF THE WATER
5. DIMENSION A2 & A3 SHOULD BE AS LARGE AS POSSIBLE WITHOUT INTERFERING WITH M.J BOLTS

THRUST BLOCK

#502 10-10-12

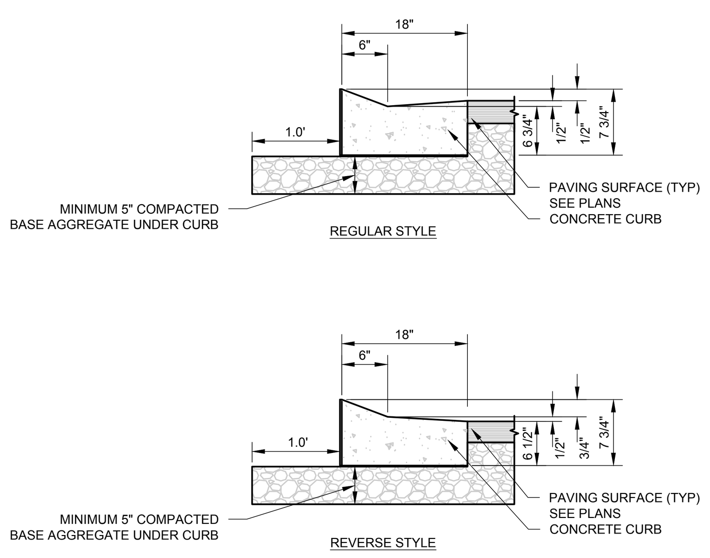

NOTES:

1. LATERAL CONTRACTION JOINTS SHALL BE PLACED AT INTERVALS OF NOT MORE THAN 15 FEET NOR LESS THAN 6 FEET. THE JOINTS SHALL BE A MINIMUM OF 3 INCHES IN DEPTH.
2. EXPANSION JOINTS SHALL BE PLACED TRANSVERSELY AT RADIUS POINTS ON CURVES OF RADIUS 200 FEET OR LESS, AND AT ANGLE POINTS, OR AS DIRECTED BY THE ENGINEER OF RECORD. THE EXPANSION JOINTS FILLER SHALL BE A ONE PIECE FIBERBOARD OR THE APPROVED EQUIVALENT MATERIAL HAVING THE SAME DIMENSIONS AS CURB & GUTTER AT THAT STATION AND BE 0.5 INCH THICK.
3. IN ALL CASES, CONCRETE CURB & GUTTER SHALL BE PLACED ON THOROUGHLY COMPACTED CRUSHED STONE.
4. REVERSE STYLE CURB LOCATIONS ARE NOTED ON THE PLANS.

18" DEPRESSED CURB

#603-WI 12-14-12

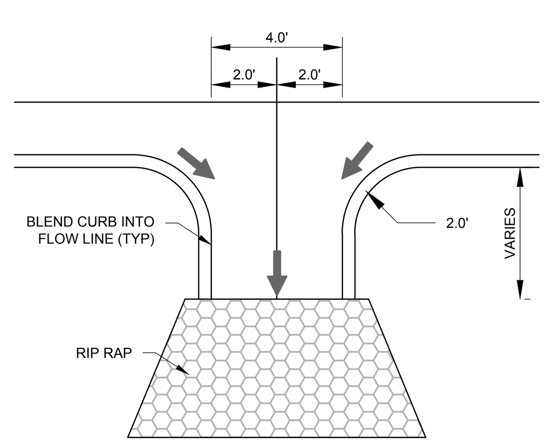

NOTES:

1. PITCH CONCRETE AT 2% FROM FLOW LINE OF GUTTER SECTION TO C/L OF FLUME.

CONCRETE FLUME

#628 10/27/14

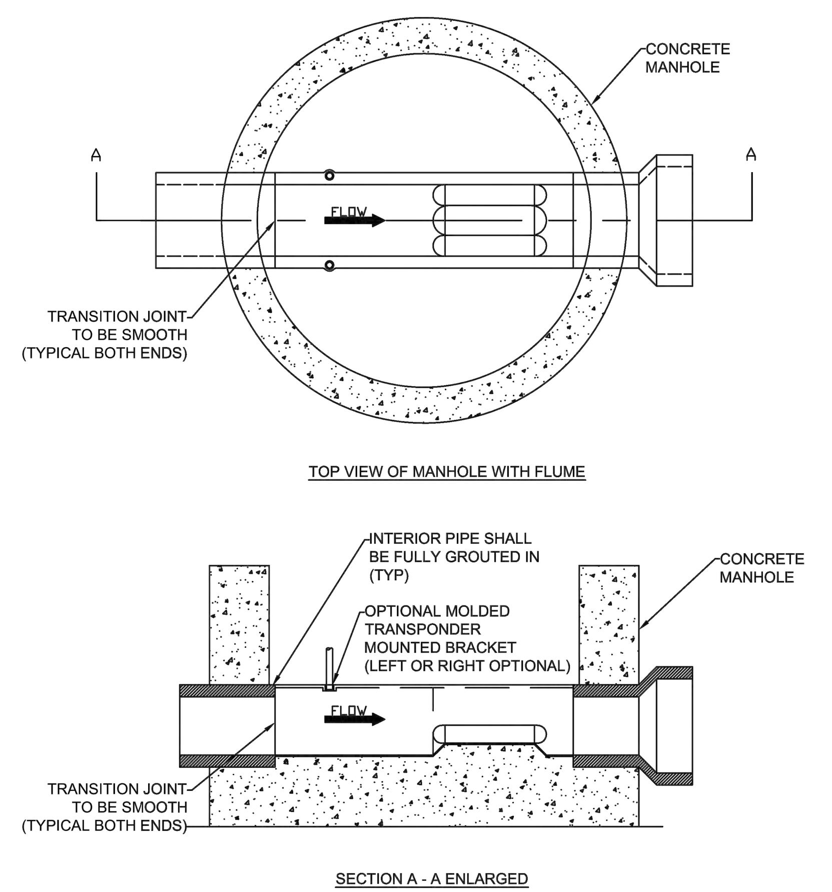

NOTE:

1. FLUME SHALL BE SET LEVEL INSIDE THE MANHOLE FOR PROPER TESTING PROCEDURES.
2. REFER TO VILLAGE STANDARD SPECIFICATIONS FOR SANITARY SEWER.

SCALE: NTS

PALMER-BOWLUS FLUME DETAIL (1 OF 2)

DETAIL: SAN - 2A

CREATED: 11–21–12

REVISED: 11–18–15

APPROVED BY: MATT FINEOUR

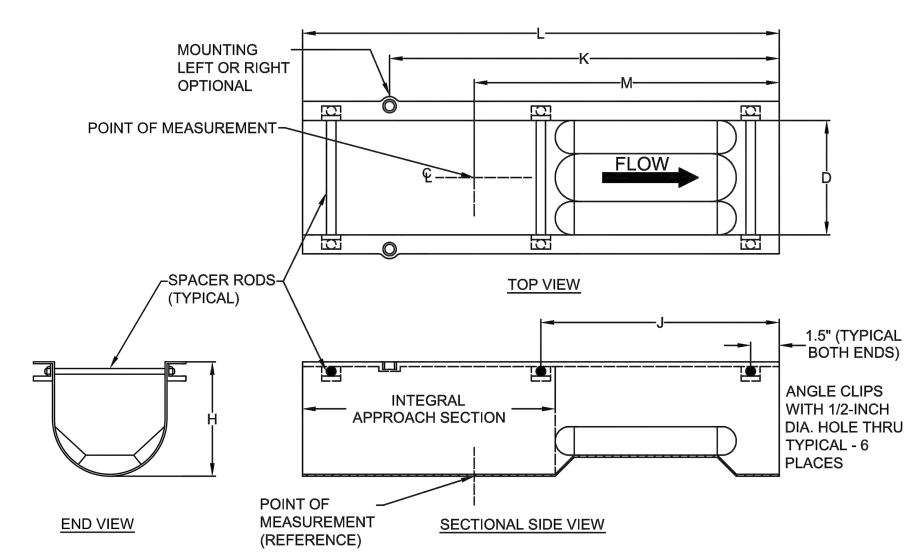

DIMENSIONS TABLE

PIPE SIZE	D	H	M	K	J	L
4	4	6	11	15 7/16	6 1/2	17
6	6	8	16	20 7/16	12 1/2	25
8	8	10	21	25 7/16	16 1/2	33
10	10	12	26	30 7/16	20 1/2	41
12	12	14	31	35 7/16	24 1/2	49
15	15	17	38 1/2	42 15/16	30 1/2	61
18	18	20	46	50 7/16	36 1/2	73
21	21	23	53 1/2	57 15/16	42 1/2	85
24	24	26	61	65 7/16	48 1/2	97
27	27	29	68 1/2	72 15/16	54 1/2	109
30	30	32	76	80 7/16	60 1/2	121

NOTES:

1. DIMENSIONS ARE IN INCHES, UNLESS OTHERWISE SPECIFIED.
2. DIMENSIONS PROVIDED FOR REFERENCE ONLY.

SCALE: NTS

PALMER-BOWLUS FLUME DETAIL (2 OF 2)

DETAIL: SAN - 2B

CREATED: 11–21–12

REVISED: 11–16–15

APPROVED BY: MATT FINEOUR

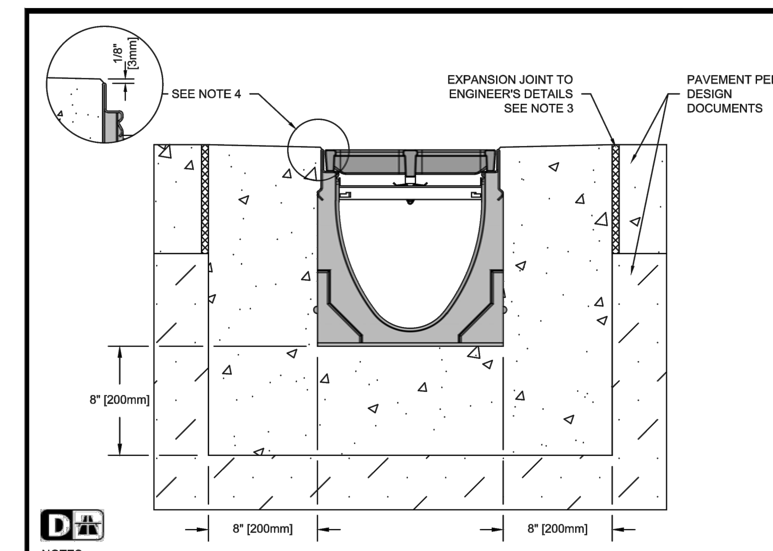

NOTES:

1. IT IS NECESSARY TO ENSURE MINIMUM DIMENSIONS SHOWN ARE SUITABLE FOR EXISTING GROUND CONDITIONS. *ENGINEERING ADVICE MAY BE REQUIRED.*
2. MINIMUM CONCRETE STRENGTH OF 4,000 PSI IS RECOMMENDED. CONCRETE SHOULD BE VIBRATED TO ELIMINATE AIR POCKETS.
3. EXPANSION AND CONTRACTION CONTROL JOINTS AND REINFORCEMENT ARE RECOMMENDED TO PROTECT CHANNEL AND CONCRETE SURROUND. *ENGINEERING ADVICE MAY BE REQUIRED.*
4. THE FINISHED LEVEL OF THE CONCRETE SURROUND MUST BE APPROX. 1/8" [3mm] ABOVE THE TOP OF THE CHANNEL EDGE.
5. CONCRETE BASE THICKNESS SHOULD MATCH SLAB THICKNESS. ENGINEERING ADVICE MAY BE REQUIRED TO DETERMINE PROPER LOAD CLASS.
6. REFER TO ACO'S LATEST INSTALLATION INSTRUCTIONS FOR FURTHER DETAILS.

SPECIFICATION CLAUSE

K200 KLASSIKDRAIN - LOAD CLASS D

GENERAL
THE SURFACE DRAINAGE SYSTEM SHALL BE POLYMER CONCRETE K200 CHANNEL SYSTEM WITH GALVANIZED STEEL EDGE RAILS AS MANUFACTURED BY ACO POLYMER PRODUCTS, INC.

MATERIALS
CHANNELS SHALL BE MANUFACTURED FROM POLYESTER RESIN POLYMER CONCRETE WITH AN INTEGRALLY CAST-IN GALVANIZED STEEL EDGE RAIL. MINIMUM PROPERTIES OF POLYMER CONCRETE WILL BE AS FOLLOWS:

COMPRESSIVE STRENGTH:	14,000 PSI
FLEXURAL STRENGTH:	4,000 PSI
TENSILE STRENGTH:	1,500 PSI
WATER ABSORPTION:	0.07%
FROST PROOF	YES
DILUTE ACID AND ALKALI RESISTANT	YES
B117 SALT SPRAY TEST COMPLIANT	YES

THE SYSTEM SHALL BE 8" (200mm) NOMINAL INTERNAL WIDTH WITH A 10.2" (260mm) OVERALL WIDTH AND A BUILT-IN SLOPE OF 0.5%. CHANNEL INVERT SHALL HAVE DEVELOPED "V" SHAPE. ALL CHANNELS SHALL BE INTERLOCKING WITH A MALE/FEMALE JOINT.

THE COMPLETE DRAINAGE SYSTEM SHALL BE BY ACO POLYMER PRODUCTS, INC. ANY DEVIATION OR PARTIAL SYSTEM DESIGN AND/OR IMPROPER INSTALLATION WILL VOID ANY AND ALL WARRANTIES PROVIDED BY ACO POLYMER PRODUCTS, INC.

CHANNEL SHALL WITHSTAND LOADING TO PROPER LOAD CLASS AS OUTLINED BY EN 1433. GRATE TYPE SHALL BE APPROPRIATE TO MEET THE SYSTEM LOAD CLASS SPECIFIED AND INTENDED APPLICATION. GRATES SHALL BE SECURED USING 'QUICKLOK' BOLTLESS LOCKING SYSTEM. CHANNEL AND GRATE SHALL BE CERTIFIED TO MEET THE SPECIFIED EN 1433 LOAD CLASS. THE SYSTEM SHALL BE INSTALLED IN ACCORDANCE WITH THE MANUFACTURER'S INSTRUCTIONS AND RECOMMENDATIONS.

K2-D-ECP

K200 - KLASSIKDRAIN - LOAD CLASS: D

Exposed Concrete Pavement

INSTALLATION DRAWING - ACO DRAIN

DATE: 08/25/15

ACO Polymer Products, Inc.

825 W. Beechcraft St Casa Grande, AZ 85122 Tel: 520-421-9988 Fax: 520-421-9899	9470 Pinecone Dr. Mentor, OH 44060 Tel: 440-639-7230 Fax: 440-639-7235	4211 Pleasant Rd. Fort Mill, SC 29708 Tel: 440-639-7230 Fax: 803-802-1063

Arizona Tel: 888-490-9552 e-mail: sales@acousa.com Ohio Tel: 800-543-4764 www.acousa.com South Carolina Tel: 800-543-4764

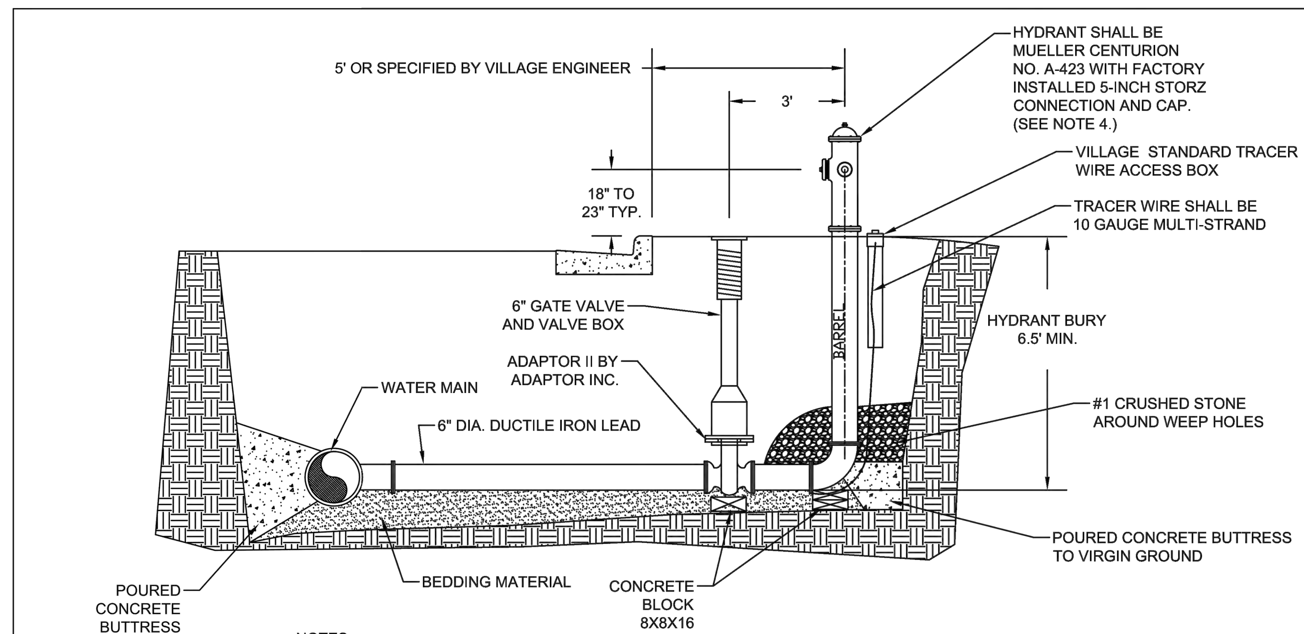

NOTES:

1. MECHANICAL JOINTS FROM TEE TO VALVE AND FROM VALVE TO HYDRANT SHALL BE RESTRAINED WITH MEGALUGS AND STAINLESS STEEL BOLTS.
2. ALL BOLTS SHALL BE STAINLESS STEEL BOLTS.
3. REFER TO VILLAGE STANDARD SPECIFICATIONS FOR WATER MAIN CONSTRUCTION
4. HYDRANT SPECIFICATIONS - 2 EACH 2-1/2 INCH NST NOZZLE, 1 FACTORY INSTALLED 5-INCH STORZ CONNECTION AND CAP MANUFACTURED BY MUELLER.
5. PAINT SPECIFICATION - PLEASE REFER TO VS-0400 OF THE VILLAGE CONSTRUCTION SPECIFICATIONS.
6. HYDRANT EXTENSIONS ARE NOT PERMITTED.

SCALE: NTS

STANDARD HYDRANT ASSEMBLY

DETAIL: W - 1

CREATED: 11–26–12

REVISED: 11–16–15

APPROVED BY: MATT FINEOUR

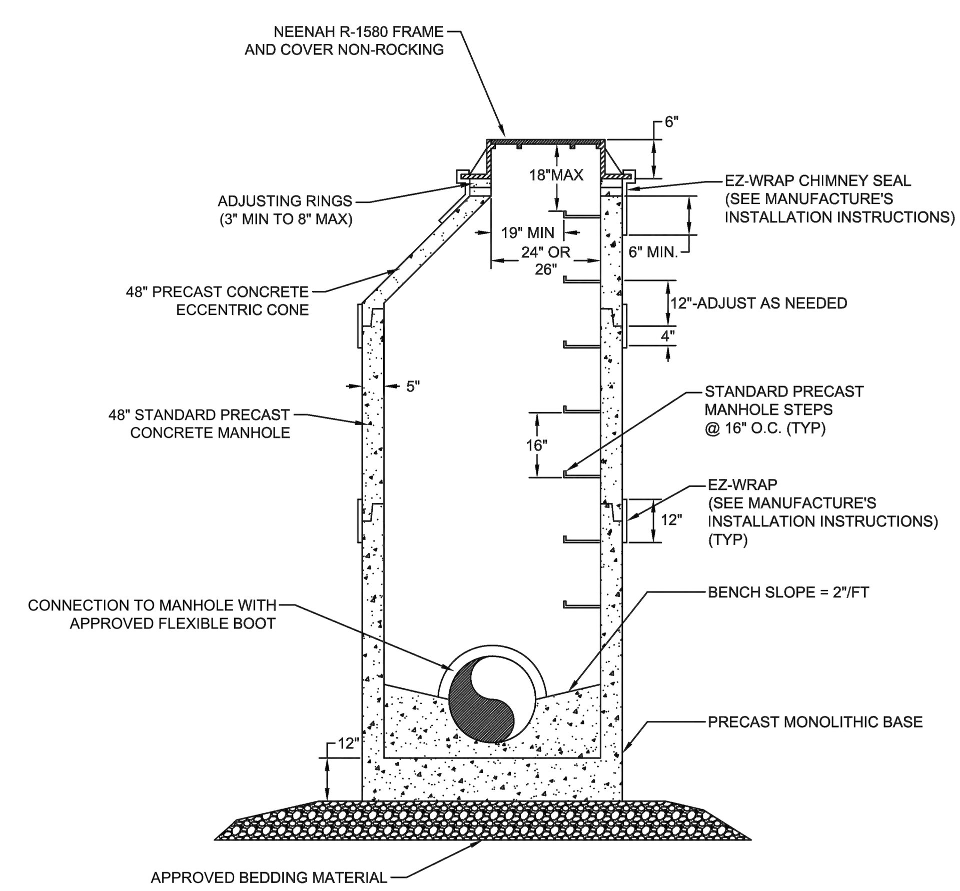

NOTE: REFER TO VILLAGE STANDARD SPECIFICATIONS FOR SANITARY SEWER.

SCALE: NTS

STANDARD SANITARY MANHOLE

DETAIL: SAN - 1

CREATED: 11–21–12

REVISED: 11–10–15

APPROVED BY: MATT FINEOUR

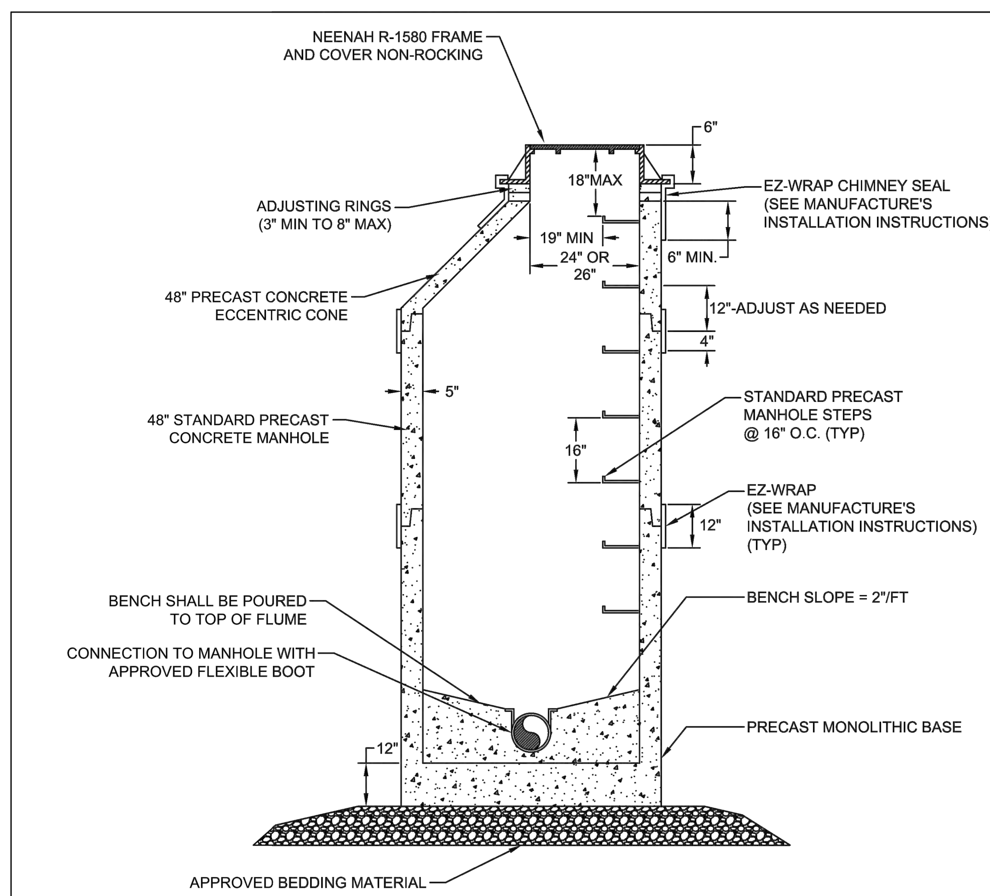

NOTES:

1. STANDARD SAMPLING MANHOLE SHALL HAVE A PALMER-BOWLUS FLUME WITH INTEGRAL APPROACH INSTALLED.
2. VILLAGE OF PLEASANT PRAIRIE DPW SHALL BE CONTACTED FOR FINAL INSPECTION OF SAMPLING MANHOLES.
3. SEE DETAIL SAN-2A AND SAN-2B FOR PALMER-BOWLUS FLUME DETAILS.
4. REFER TO VILLAGE STANDARD SPECIFICATIONS FOR SANITARY MANHOLES.

SCALE: NTS

STANDARD SAMPLING MANHOLE

DETAIL: SAN - 2

CREATED: 11–21–12

REVISED: 11–10–15

APPROVED BY: MATT FINEOUR

NOTE:
-SYSTEM SIZING SHALL BE COMPLETED BY A FIRE SUPPRESSION ENGINEER AND APPROVED OF BY THE VILLAGE OF PLEASANT PRAIRIE FIRE DEPARTMENT.
-SYSTEM INSTALLATION MUST BE CONSTRUCTED UNDER THE ONSITE SUPERVISION OF A LICENSED SPRINKLER FITTER.

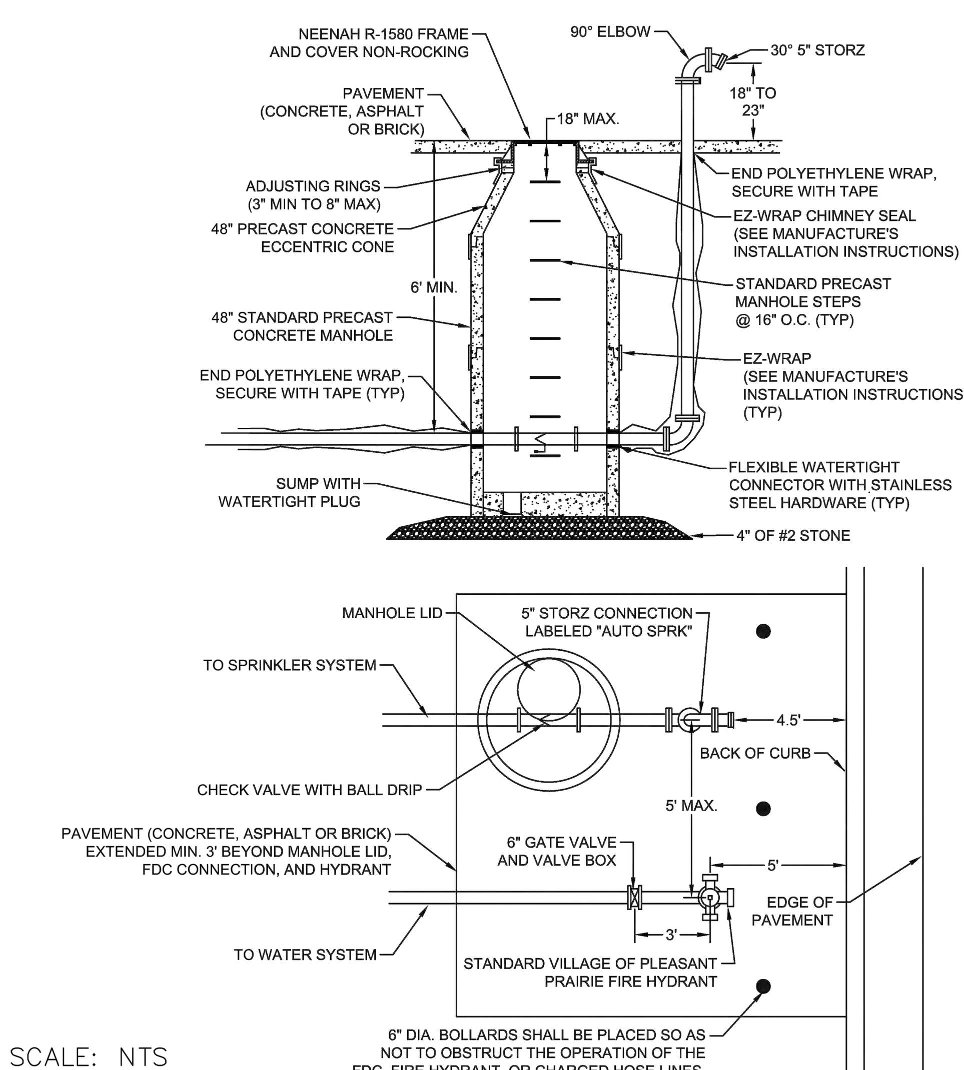

SCALE: NTS

PUMPER PAD FDC DETAIL

DETAIL: FD - 1

CREATED: 4–16–13

REVISED: 3–2–16

APPROVED BY: D. McELMURY

FOR REVIEW ONLY

www.pinnacle-engr.com

DRAFTED: EP DESIGNED: DCC REVIEWED: ####

PLAN I DESIGN I DELIVER
www.pinnacle-engr.com

PINNACLE ENGINEERING GROUP
ENGINEERING I NATURAL RESOURCES I SURVEYING

WISCONSIN OFFICE:
15850 W. BLUEMOUND ROAD
BROOKFIELD, WI 53005
(262) 754-8888
CHICAGO I MILWAUKEE : NATIONWIDE

LAKEVIEW LOT 40
PLEASANT PRAIRIE, WI

CONSTRUCTION DETAILS

REVISIONS

PEG JOB No 559.00A-WI
PEG PM MAC
START DATE 07/11/16
SCALE NTS

SHEET C-9 OF C-9

© COPYRIGHT 2015

CONSTRUCTION DETAILS

Z:\PROJECTS\2015\559.00A-WI\CAD\SHEETS\559.00A-WI CONSTRUCTION DETAILS.DWG

01 VIEW LOOKING NORTH EAST

02 VIEW LOOKING NORTH EAST

03 VIEW LOOKING NORTH EAST

04 VIEW LOOKING SOUTH EAST

05 VIEW LOOKING SOUTH WEST

AERIAL IMAGE - LOT 40

© 2016 Partners in Design Architects, Inc.

REVISIONS:

DOHENY ENTERPRISES INC.
Lot 40, Lakeview Corp. Park, Pleasant Prairie, WI

SITE PHOTOS

2610 Lake Cook Road
Suite 280
Riverwoods, IL 60015
Ph.: (847) 940-0300
Fax: (847) 940-1045

Partners in Design ARCHITECTS

PROJECT NO.: 535.09.034
DRAWN BY: LEK
CHECKED BY: WHB
DATE: 07.18.16
SHEET NO.: A0.1

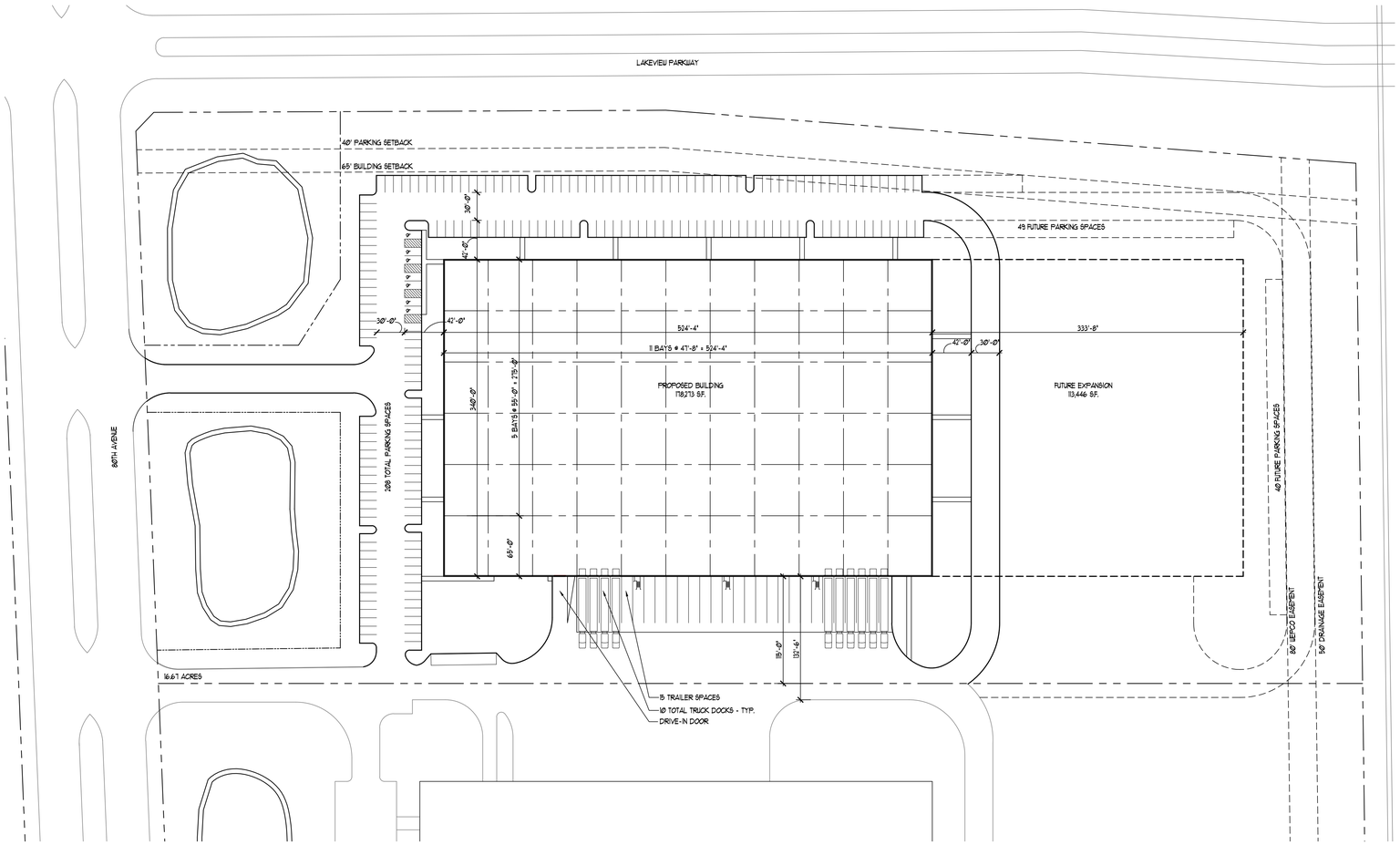

1 A1.0 PROPOSED SITE PLAN
1" = 60'-0"

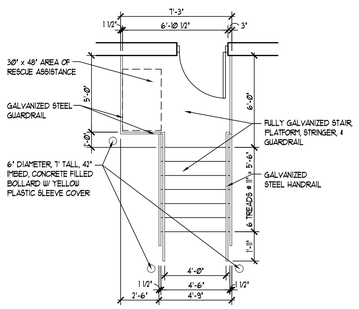

2 A1.1 TYP. EXIT STAIR PLAN
1/4" = 1'-0"

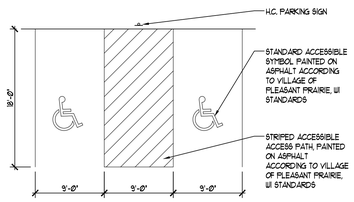

3 A1.1 TYP. H.C. PARKING STALL
1/8" = 1'-0"

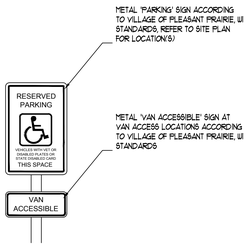

4 A1.1 H.C. PARKING SIGN
1" = 1'-0"

GENERAL SITE NOTES:

1. ALL SITE LIGHTING SHALL BE DIRECTED DOWNWARDS AND SHALL NOT GLARE ONTO ADJACENT PROPERTIES OR PUBLIC ROADWAYS.

TRUCKS/TRAILERS PARKED OUTSIDE OF THE FACILITY SHALL NOT BE USED AS 2. A MEANS OF ADDITIONAL STORAGE AND/OR WAREHOUSING SPACE, EXCEPT FOR THOSE TRUCKS/TRAILERS THAT HAVE BEEN LOADED AND ARE AWAITING IMPENDING DELIVERY OR THOSE THAT ARE IN QUEUE AND ARE AWAITING IMPENDING UNLOADING PROCEDURES.

3. AT NO TIME SHALL THERE BE ANY OUTDOOR STORAGE OF PALLETS (WOODEN, PLASTIC, OR METAL), RECYCLING MATERIALS, GARBAGE, LANDSCAPING EQUIPMENT OR LANDSCAPE MATERIALS, ETC.

4. PROJECT PARCEL IS ZONED M-2, GENERAL MANUFACTURING DISTRICT.

5. THE LOCATION OF ALL CONSTRUCTION TRAILERS PARKED ON THE SITE DURING CONSTRUCTION ACTIVITIES SHALL BE APPROVED BY THE VILLAGE OF PLEASANT PRAIRIE. NO CONSTRUCTION TRAILERS SHALL BE PARKED IN VILLAGE, COUNTY, OR STATE RIGHTS-OF-WAY. ALL CONSTRUCTION RELATED SIGNAGE SHALL BE APPROVED AND PERMITTED BY THE VILLAGE.

6. THERE SHALL BE NO CUSTOMER OR EMPLOYEE PARKING PERMITTED ON 80TH AVENUE OR SPRINGBROOK ROAD.

7. DUMPSTER/RECYCLING CONTAINERS ARE NOT SHOWN ON PROPOSED SITE PLAN AT THIS TIME. THE LOCATION/SIZE OF SUCH IS TO BE DETERMINED WHEN A TENANT IS OBTAINED AND WILL FOLLOW ALL VILLAGE ORDINANCES. THE LOCATION SHALL BE APPROVED BY THE ZONING ADMINISTRATOR. THE DUMPSTER/RECYCLING AREAS SHALL BE FULLY SCREENED FROM THE PUBLIC VIEW AND ADJACENT HIGHWAY/ROADWAYS.

8. IF/WHEN ANY FUTURE PARKING LOT EXPANSIONS OCCUR, PERMITS FROM THE VILLAGE WILL BE REQUIRED AND THE EXPANSION PARKING AREAS, AS WELL AS THE ASSOCIATED MANEUVERING LANES, SHALL INCORPORATE VERTICAL CONCRETE CURB & GUTTER.

9. MUNICIPAL UTILITIES SHALL NOT BE BURIED UNDER EARTH BERMS OR TREE LANDSCAPING.

© 2016 Partners in Design Architects, Inc.

PROJECT DEVELOPMENT DATA:

PROPOSED LAKEVIEW LOT 40:	
SITE ZONING:	M-2, GENERAL MANUFACTURING DISTRICT
SITE AREA:	16.67 ACRES (726,145 SF.)
BUILDING AREA:	118,273 SF.
BLDG. COVERAGE RATIO:	
BUILDING IMPERVIOUS AREA:	118,273 SF.
ALL OTHER IMPERVIOUS AREA:	311,792 SF.
TOTAL IMPERVIOUS AREA:	430,065 SF.
TOTAL IMPERVIOUS PERCENTAGE:	61.5%
GREENSPACE COVERAGE RATIO:	
TOTAL LANDSCAPED AREA:	236,080 SF
TOTAL LANDSCAPED PERCENTAGE	32.5%
PARKING:	
TOTAL CAR SPACES (INCLUDING HANDICAPPED)	208 SPACES
TOTAL TRUCK/ DOCK SPACES	25 DOCK LOCATIONS

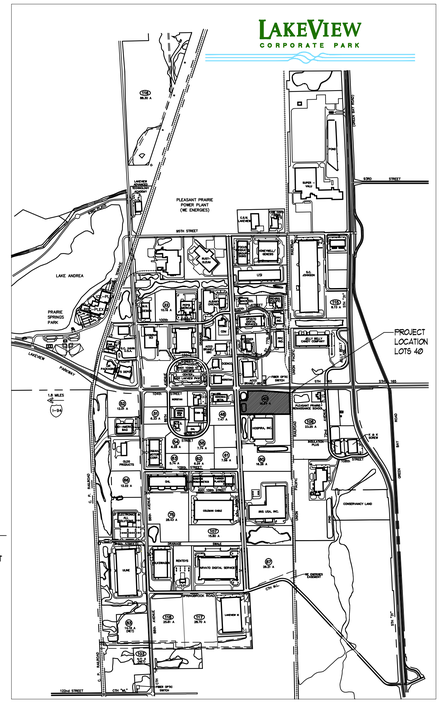

LOCATION PLAN
NOT TO SCALE

REVISIONS:

DOHENY ENTERPRISES INC.
Lot 40, Lakeview Corp. Park, Pleasant Prairie, WI

SITE PLAN

2610 Lake Cook Road
Suite 280
Riverwoods, IL 60015
Ph.: (847) 940-0300
Fax: (847) 940-1045

Partners in Design ARCHITECTS

PROJECT NO.: 535.09.034
DRAWN BY: LEK
CHECKED BY: WHB
DATE: 07.18.16
SHEET NO.: A1.1

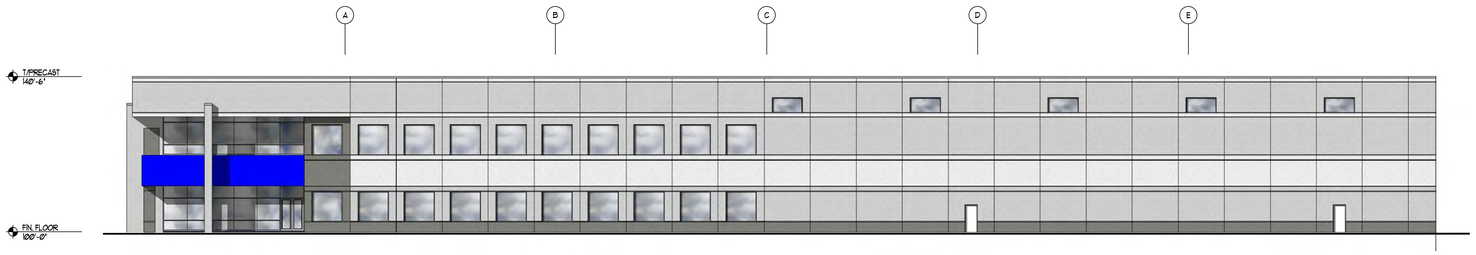

1 / A4.1 WEST ELEVATION
1/16" = 1'-0"

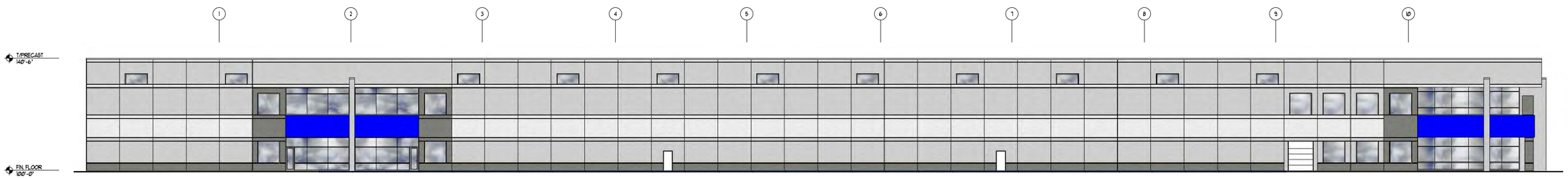

2 / A4.1 NORTH ELEVATION
1/16" = 1'-0"

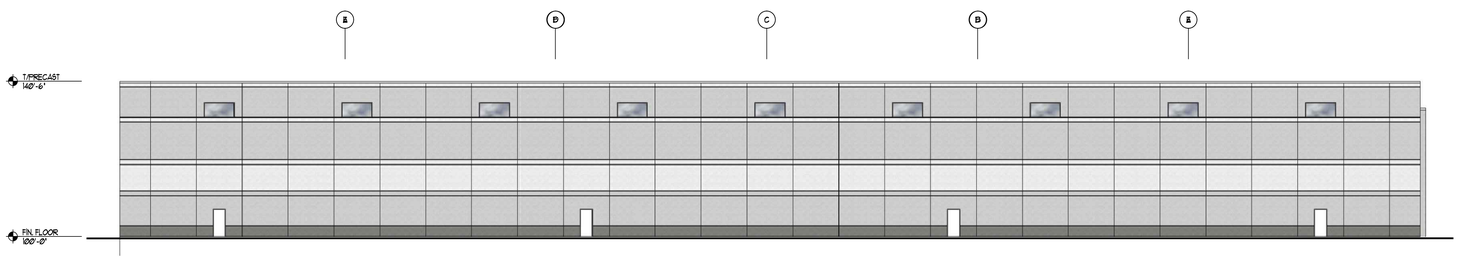

3 / A4.1 EAST ELEVATION
1/16" = 1'-0"

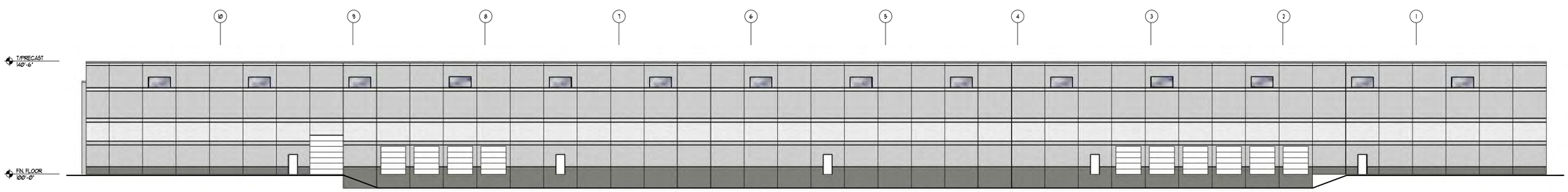

4 / A4.1 SOUTH ELEVATION
1/16" = 1'-0"

© 2016 Partners in Design Architects, Inc.

REVISIONS:

DOHENY ENTERPRISES INC.
Lot 40, Lakeview Corp. Park, Pleasant Prairie, WI

CONCEPTUAL BUILDING ELEVATIONS

2510 Lake Cook Road
Suite 280
Riverwoods, IL 60015
Ph.: (847) 940-0300
Fax: (847) 940-1945

Partners in Design ARCHITECTS

PROJECT NO.: 535.09.034
DRAWN BY: LEK
CHECKED BY: WHB
DATE: 07.18.16
SHEET NO.: A4.1

Office of the Village Administrator
Michael R. Pollocoff

MEMORANDUM

TO: Village Board

FROM: Michael R. Pollocoff, Village Administrator
Thomas G. Shircel, Assistant Village Administrator

DATE: September 6, 2016

SUBJECT: Option & Land Lease between the Village of Pleasant Prairie ("Village") and SBA Towers IX ("SBA") for the Pleasant Prairie Park Site

---

Option & Land Lease - This proposed Option & Land Lease ("Lease") is for SBA to lease a portion of Pleasant Prairie Park, located at 8436 104th Avenue on a portion of Tax Parcel Number 92-4-122-074-0694, upon which a cellular communications facility will be constructed. SBA is requesting Village Board approval of the Lease which sets forth terms, rules, rents and other regulations for the cell facility.

Cellular Facility Construction - Midwest Underground Technology, Inc. ("MUTI") is the general contractor for the construction of the facility. In general, the cellular site within the park consists of:

- An SBA-leased 60' x 75' (4,500 square feet) area with fence enclosure.
- An initial 26' x 24' (624 square feet) x 14'-7" in height, two-tenant capacity equipment shelter (a 2nd adjacent two-tenant capacity equipment shelter is proposed to be constructed within the lease area at a later date with the proper Village approvals).
- A 170 foot, multi-carrier monopole tower (175 feet with lighting rod).
- Initial tenant, Verizon, to install its antennas and associated equipment upon the tower at the 165 foot tower height and to install its equipment within the eastern tenant space of the initial equipment shelter.
- A 20 foot wide Access and Utility Easement.

Verizon will need to enter into a separate (sub)lease agreement and any necessary easements with SBA to locate its amenities on the tower.

Option, Terms and Rent – an Option fee of $2,500 will be paid to the Village upon execution of the Lease. The one-year Option period allows the SBA and future tenants to complete their due diligence. The initial term of the Lease is for 5 years and shall automatically renew for up to 5 additional terms of 5 years each. The rent for the initial tenant, Verizon, will commence at $1,500/month and will increase yearly by 3%. In addition to the rent, the Village shall receive collocation revenue sharing beginning with the 2nd sublessee. Revenue Share shall be calculated as follows:

- Additional Tenant locating during the 1st Term: $1,200/month
- Additional Tenant locating during the 2nd Term: $1,300/month
- Additional Tenant locating during the 3rd Term: $1,400/month

SBA shall pay the sublessee rents to the Village which shall also increase by 3%/year.

Landscaping – SBA will make a one-time $10,000 payment to the Village for the Village to landscape this cellular facility. The Village will be responsible for the maintenance of the landscaping. Since this is a Village Park location, Village landscape responsibilities will allow the Village Parks Department to maintain this cellular site to the Village standards.

Easement – The Village is providing a 20 foot wide Access and Utility Easement ("Easement") from 104th Avenue to the cellular site to allow for 24/7/365 access and parking for the facility maintenance crews. SBA will make an annual $600 contribution to the Village for maintenance costs related to the Easement. Similar to the Lease, the Easement maintenance fee will increase by 3%/year.

SBA Cellular Facility Summary

- This commercial communication facility is necessary in order to offer an uninterrupted, seamless wireless network providing cellular telephone service, voice paging and wireless data transmission service to further serve this area of Pleasant Prairie.
- The 170 foot tall monopole structure has been engineered and is constructed to accommodate multiple (4) cellular carriers. In addition, the two, 624 square foot equipment shelters can each accommodate 2 carriers, with the initial carrier being Verizon. The multi-carrier tower and equipment shelter will negate the need for additional towers and equipment shelters on the site and will help to avoid the proliferation of additional communication facilities in this area of the Village.
- In order to maintain a consistent, pleasant, park-like ambiance, each of the two-carrier equipment buildings will be designed and constructed with the same exterior building materials consisting of durable masonry (brick or decorative block), standing seam metal or shingle roofing, aluminum soffits, etc.

Village Approval – The Village Community Development Department is responsible for the review and approval of new Commercial Communications Structure applications. The SBA application is currently under review.

<u>RECOMMENDATION</u>

The Village staff recommends that the Village Board approve the Option & Land Lease between SBA and the Village of Pleasant Prairie subject to the following:

- Compliance with the pending Community Development Department (conditional) approval of the SBA Commercial Communications Structure for the Pleasant Prairie Park facility.

OPTION & LAND LEASE

This Option and Land Lease, hereinafter referred to as "Lease", is made the last day executed below by and between **VILLAGE OF PLEASANT PRAIRIE**, a Wisconsin municipal corporation, having an address of 9915 39th Avenue, Pleasant Prairie, Wisconsin, 53158 hereinafter referred to as "Lessor", and **SBA TOWERS IX, LLC,** a Delaware limited liability company, having an office at 8051 Congress Avenue, Boca Raton, Florida 33487-1307, hereinafter referred to as "Lessee."

1. The Option.

(a) For the sum of Two Thousand Five Hundred and No/100 Dollars ($2,500.00) (the "Option Fee"), to be paid to Lessor by Lessee upon execution of this Lease and other good and valuable consideration, Lessor hereby grants to Lessee the exclusive and irrevocable option for one (1) year from the date hereof (the "Initial Option Period"), to lease the Leased Space (as defined below) on the terms and conditions set forth below (the "Option"). The Option may be extended for an additional one (1) year period upon written notification to Lessor by Lessee accompanied by the payment of an additional One Thousand Two Hundred and No/100 Dollars ($1,200.00) (the "Additional Option Fee"), delivered to Lessor prior to the end of the Initial Option Period. The Initial Option Period, as it may be extended, is referred to herein as the "Option Period."

(b) In the event the Additional Option Fee is not made and/or written notice not delivered by the due date for the same, then the Option will terminate and this Lease will terminate and Lessor will be entitled to retain all previously paid sums as full payment for the Option granted hereunder. However, if Lessor accepts any Additional Option Fee, Rent (as defined below), and/or written notice after the due date for the same, then Lessee's failure to make timely payment of the additional fee will be deemed waived and this Lease will be reinstated.

(c) During the Option Period, Lessee shall have the right to enter the Premises (as defined below) to conduct tests and studies, at Lessee's expense, to determine the suitability of the Leased Space for Lessee's intended use. The tests may include, without limitation, surveys, soil tests, environmental assessments and radio wave propagation measurements. Lessee agrees to keep such test results confidential and not to disclose them except as reasonably necessary for purposes of this Lease and as required by applicable law.

(d) Lessee may exercise the Option by delivery of written notice to Lessor in accordance with the Notice provision specified herein. Upon Lessee's exercise of the Option, the Initial Term (as defined below) shall commence.

2. Leased Space and Premises. Upon Lessee's exercise of the Option, Lessor shall lease, and hereby leases, to Lessee approximately 4,500 (60' x 75') square feet of space as depicted in Exhibit A attached hereto (the "Leased Space") within the property commonly known as 8436 104th Avenue, Village of Pleasant Prairie, County of Kenosha, State of Wisconsin, 53158, Property Parcel ID: 91-4-122-074-0649 with the legal description set forth in Exhibit B attached hereto ("Premises"). Lessor also hereby grants to Lessee the right to survey the Leased Space at Lessee's cost. The Leased Space legal and access and utility easement set forth in the survey will replace Exhibit A as soon as it becomes available. In the event of any discrepancy between the description of the Leased Space contained herein and the survey, the survey will control. The Leased Space will be utilized to construct, support and operate a wireless communications facility, including a communications tower, antennas, cables, and related structures and improvements (collectively the "Structures"), including the uses as permitted and described in Section 11 of this Lease and for any other purpose with the Lessor's prior written consent which shall not be unreasonably withheld, conditioned or delayed.

Lessee agrees to accommodate Lessor's communications equipment used exclusively for Lessor's municipal communications system, i.e. emergency management communications and not as a revenue producing activity, at one mutually agreeable elevation on the tower limited to ten (10) feet of vertical tower space at a rate of one dollar ($1.00) per year so long as tower space, capacity and ground space for any required Lessor ground equipment are available. Lessor's equipment, installation height and ground space shall be mutually agreed upon by Lessee and Lessor at a later date and each party agrees to act reasonably to reach mutual agreement. Prior to installation of any of its equipment as described above, Lessor agrees to execute an Antenna Site Agreement ("ASA"), substantially similar to the form attached hereto as Exhibit C. Lessor at Lessor's sole cost and expense shall be responsible for the installation of its equipment on the tower. Lessor shall be entitled to replace its communication equipment with equivalent equipment after having entered into a written amendment of the ASA. Any replacement of Lessor's initial equipment shall be installed at the sole cost and expense of Lessor.

3. Term. The initial term of this Lease will be five (5) years (the "Initial Term") from the "Commencement Date" specified below (in no event shall this date be earlier than the date on which Lessee exercises the Option) and shall automatically renew for up to five (5) additional terms of five (5) years each (each a "Renewal Term", collectively with the Initial Term referred to hereinafter as the "Term") unless Lessee notifies Lessor of its intention not to renew prior to commencement of the succeeding Renewal Term.

4. Rent. The rent for the Initial Term of this Lease will be One Thousand Five Hundred and No/100 Dollars ($1,500.00) per month (the "Rent"), paid monthly in advance, which Lessee will pay to Lessor at the place as Lessor will designate to Lessee in writing. If the Initial Term or any Renewal Term does not begin on the first day or end on the last day of a month, the Rent for that partial month will be prorated by multiplying the monthly Rent by a fraction, the numerator of which is the number of days of the partial month included in the Initial Term or Renewal Term and the denominator of which is the total number of days in the full calendar month. Beginning with the second (2nd) year of this Lease and every year thereafter, the then current monthly rental fee (including without limitation Rent applicable to subleases as described below in this Paragraph 4) will be increased by three (3%) percent. Each such year shall commence on the corresponding anniversary of the Commencement Date (as defined below). Lessee is entitled to withhold payment of Rent until such time as Lessee receives a completed W-9 form from Lessor, setting forth the Federal tax identification number of Lessor or the person or entity to whom the Rent checks are to be made payable as directed in writing by Lessor. The parties acknowledge and agree that the foregoing is a reasonable requirement in order to allow Lessee to comply with applicable legal requirements.

In addition to the Rent, Lessor shall receive revenue sharing for the second (2nd), broadband telephony carrier sublessee, including but not limited to PCS providers such as AT&T, Verizon, T-Mobile and Sprint-Nextel, using the Structures or the Leased Space. Notwithstanding the foregoing, all revenue sharing contained herein shall be payable as Rent, one month in arrears upon Lessee's receipt

of rental payment from its sublessees.

- Additional Tenant 1st Term: $1,200 per month
- Additional Tenant 2nd Term: $1,300 per month
- Additional Tenant 3rd Term: $1,400 per month

Within thirty (30) days of the Commencement Date, Lessee agrees to make a one-time payment to Lessor in the amount of Ten Thousand and No/100 Dollars ($10,000.00) to cover Lessor's expense to landscape and maintain the Leased Space.

5. Ingress and Egress. Lessor hereby grants to Lessee easements (the "Easements") for ingress, egress, regress and parking of vehicles (including trucks and heavy machinery) over the Premises within twenty (20) feet and adjacent to the Leased Space for construction, operation and maintenance of the Structures on the Leased Space, and for installation, construction, operation and maintenance of underground and above ground telephone, telegraph, fiber and power lines, in connection with its use of the Leased Space. The term of these Easements will commence upon exercise of the Option and will continue until the last to occur of (i) expiration of the Initial Term or Renewal Term, or (ii) removal by Lessee of all of the Structures, and any other property from the Leased Space after expiration of the Initial Term or Renewal Term. The location and configuration of the Easements will be agreed upon by the parties within ten (10) business days after the latter of Lessee's exercise of the Option, or Lessee's approval of the survey. The Easements shall be included in any recorded Memorandum (as hereinafter defined) of this Lease. In addition, at Lessee's request and expense, these Easements will be set forth in a separate easement agreement (the "Easement Agreement") which Lessor and Lessee agree to execute and which Lessee will have recorded as an encumbrance on the property of Lessor. In all events, the Easements and this Lease shall be binding upon all subsequent owners, successors and assigns of the Premises. Lessee agrees that it shall not block access to Lessor's park in exercising such access rights.

Lessee agrees that Lessor may, at Lessor's expense, relocate the above described Easements to another comparable location on the Premises provided that: (a) Lessee receives no less than sixty (60) days prior written notice thereof; (b) Lessee approves the proposed new location of the easements, which approval will not be unreasonably withheld or delayed; (c) Lessee's access and beneficial use and enjoyment of the Leased Space is not interrupted, obstructed or materially affected; and (d) the utility services to the Leased Space are not interrupted.

Lessor will be responsible for maintaining the access easement and Lessee will make an annual contribution to the cost of such maintenance of Six Hundred Dollars ($600.00) per Lease year (the "Maintenance Fee") as its share of the maintenance costs for the access easement. The Maintenance Fee shall increase annually by three percent (3%) at each anniversary of the Commencement Date. In consideration of the Maintenance Fee, Lessor agrees to, in a commercially reasonable manner, maintain and repair the access easement in good condition and repair for the uses by Lessee as contemplated hereunder. provided, however, that Lessor shall not be responsible for repairing any damage to the access easement caused solely and directly by Lessee or its sublessees and/or invitees, which damage Lessee shall be obligated to repair. Should Lessor fail to so maintain or repair the access easement as required herein, Lessee shall cease to be obligated to pay the Maintenance Fee until such time as such maintenance and/or repair is made by Lessor.

6. Title and Quiet Possession. Lessor represents and covenants that Lessor owns the Leased Space and the Premises (including the property that is subject to the Easements) in fee simple terms, free and clear of all liens, encumbrances and restrictions of every kind and nature, except for those as set forth below:

Name of Lien holder	Type of Lien
N/A	

Lessor represents and warrants that there are no matters affecting title that would prohibit, restrict or impair the leasing of the Leased Space, use or occupancy thereof, or the granting of the Easements in accordance with the terms and conditions of this Lease. Lessor represents and warrants to Lessee that Lessor has the full right, power and authority to enter into this Lease and that Lessee will have quiet and peaceful possession of the Leased Space and the Easements throughout the Term

7. Subordination, Non-disturbance and Attornment.

(a) Lessee agrees that this Lease will be subject and subordinate to any mortgages or deeds of trust now or hereafter placed upon the Leased Space and to all modifications thereto, and to all present and future advances made with respect to any such mortgage or deed of trust; provided that, the holder of any such instrument agrees in writing that Lessee's possession of the Leased Space will not be disturbed so long as Lessee will continue to perform its duties and obligations under this Lease and Lessee's obligation to perform the duties and obligations will not be in any way increased or its rights diminished by the provisions of this paragraph. Lessee agrees to attorn to the mortgagee, trustee, or beneficiary under any such mortgage or deed of trust, and to the purchaser in a sale pursuant to the foreclosure thereof; provided that, Lessee's possession of the Leased Space will not be disturbed so long as Lessee will continue to perform its duties and obligations under this Lease. Lessee's obligations hereunder are conditioned upon receipt by Lessee, within ten (10) business days after Lessee's notice of its intent to exercise the Option, or within ten (10) business days after the date of creation of any future mortgages or deeds of trust, of a Subordination, Non-disturbance and Attornment Agreement in form reasonably acceptable to Lessee, from any holder of a mortgage, deed to secure debt, or deed of trust to which this Lease is, or will become, subordinate.

(b) Secured Parties. Lessee may from time to time grant to certain lenders selected by Lessee and its affiliates (the "Lenders") a lien on and security interest in Lessee's interest in this Lease and all assets and personal property of Lessee located on the Leased Space (the "Personal Property") as collateral security for the repayment of any indebtedness to the Lenders. Lessor hereby agrees to subordinate any security interest, lien, claim or other similar right, including, without limitation, rights of levy or distraint for rent, Lessor may have in or on the Personal Property, whether arising by agreement or by law, to the liens and/or security interests in favor of the Lenders, whether currently existing or arising in the future. Nothing contained herein shall be construed to grant a lien upon or security interest in any of Lessor's assets. Should Lender exercise any rights of Lessee under this Lease, including the right to exercise any renewal option(s) or purchase option(s) set forth in this Lease, Lessor agrees to accept such exercise of rights by Lenders as if same had been exercised by Lessee, and Lessor, by signing below, confirms its agreement with this provision. If there shall be a monetary default by Lessee under this Lease, Lessor shall accept the cure thereof by Lenders within fifteen

(15) days after the expiration of any grace period provided to Lessee under this Lease to cure such default, prior to terminating the Lease. If there shall be a non-monetary default by Lessee under this Lease, Lessor shall accept the cure thereof by Lenders within thirty (30) days after the expiration of any grace period provided to Lessee under this Lease to cure such default, prior to terminating this Lease. This Lease may not be amended in any respect which would be reasonably likely to have a material adverse effect on Lenders' interest therein or surrendered, terminated or cancelled, without the prior written consent of Lenders. If this Lease is terminated as a result of a Lessee default or is rejected in any bankruptcy proceeding, Lessor will enter into a new lease with Lenders or their designee on the same terms as this Lease within fifteen (15) days of Lenders' request made within thirty (30) days of notice of such termination or rejection, provided Lenders pay all past due amounts under this Lease. The foregoing is not applicable to normal expirations of the term of this Lease. In the event Lessor gives Lessee any notice of default under the terms of this Lease, Lessor shall simultaneously give a copy of such notice to Lender at an address to be supplied by Lessee. Lessee shall have the right to record a memorandum of the terms of this paragraph.

8. Governmental Approvals and Compliance. During the Term, Lessee will make reasonable efforts to comply with all applicable laws affecting Lessee's use or occupancy of the Leased Space, the breach of which might result in a penalty on Lessor or forfeiture of Lessor's title to the Leased Space. Lessee will not commit, or suffer to be committed, any waste on the Leased Space. During the Option Period and the Term Lessor agrees to fully cooperate with Lessee in order to obtain the necessary permits for construction and use of the Leased Space and its Structures (including any modification(s) to the tower or Leased Space or the addition(s) of equipment or sublessees to the tower or Leased Space), including, but not limited to, zoning approvals/permits and building permits. Lessor further agrees during the Option Period and the Term, not to take any action that may adversely affect Lessee's ability to obtain all of the necessary permits required for construction of the Structures. Lessee will obtain any necessary governmental licenses or authorizations required for the construction and use of Lessee's intended Structures on the Leased Space and will furnish copies of same to Lessor as same are issued. Notwithstanding the foregoing, nothing herein shall exempt Lessee from permitting and zoning processes required by the jurisdiction, nor shall any Lessor action required hereunder be construed as granting any concession related to building and/or zoning code regulations. All building and/or zoning approvals may be subject to approval action by the Village Board and other boards or representatives of the Lessor, and nothing contained herein shall limit their discretion in granting any building and/or zoning approvals to the Lessee. Lessor shall complete the landscaping upon completion of the Structures by Lessee and shall be responsible for the on-going site maintenance and general care of the landscaping.

9. Assignment and Subleasing. Lessee is expressly permitted to assign, or transfer its right under this Lease to entities controlling, controlled by or under common control with Lessee, as part of a sale of all or substantially all of its assets, or to its lender in connection with financing. Upon such assignment, Lessee shall be relieved of all liabilities and obligations under this Lease. Any transfer of this Lease by merger, consolidation or liquidation or any change in the ownership of, or power to vote, the majority of its outstanding voting stock shall not constitute an assignment for the purposes of this paragraph. Otherwise, Lessee may not assign this Lease without the prior written consent of Lessor, which consent shall not be unreasonably withheld, conditioned or delayed. Lessee shall have the right to freely sublet or transfer space to third parties on the Leased Space without obtaining prior written consent of the Lessor. Lessor may not assign the Rent or this Lease or any rights hereunder, or grant any interest in any portion of the Premises, except in connection with conveyance of fee simple title to the Premises, without the prior written consent of Lessee, in Lessee's sole and absolute discretion. If Lessor enters into any arrangement to separate the equitable or financial benefit of this Lease, the Rent or any rights hereunder from the fee simple ownership of the Premises, the Rent shall be automatically reduced to One Dollar ($1.00) per year. In the event that Lessee from time to time subleases all or a portion of the Leased Space or as otherwise reasonably required by Lessee for work at the Leased Space, Lessor hereby grants to Lessee a temporary construction easement over such portion of the Premises as is reasonably necessary for such work. Following the completion of such work, Lessee shall, at Lessee's sole cost and expense, promptly repair any damage to the temporary easement area arising from Lessee's use thereof.

10. Notices. All notices, demands, requests, consents, approvals and other instruments required or permitted to be given pursuant to this Lease will be in writing, signed by the notifying party, or officer, agent or attorney of the notifying party, and will be deemed to have been effective upon delivery if served personally, including but not limited to delivery by messenger, overnight courier service or by overnight express mail, or upon posting if sent by registered or certified mail, postage prepaid, return receipt requested, and addressed as follows:

To Lessor:	Village of Pleasant Prairie 9915 39th Avenue Pleasant Prairie, WI 53158 Attention: Village Administrator Phone # - (262) 925-6715
Rent Payable to:	Village of Pleasant Prairie
To Lessee:	SBA TOWERS IX, LLC 8051 Congress Avenue Boca Raton, FL 33487-1307 RE: Wilmot Rd/WI17308-B Attn: Site Administration Phone # - (561) 995-7670

The address to which any notice, demand, or other writing may be delivered to any party as above provided may be changed by written notice given by the party as above provided. Simultaneously with any notice of default given to Lessee under the terms of this Lease, Lessor shall deliver a copy of such notice to Lender at an address to be provided by Lessee.

11. Lessee Improvements. Lessee has the right, at its sole expense, to make the improvements on the Leased Space as it may deem necessary, including any improvements necessary for the construction and operation of the Structures. All such Lessee improvements shall be subject to the prior written approval of the Lessor, which approvals shall not be unreasonably withheld, delayed, or conditioned. Lessee will be responsible for the cost of any site preparation work necessary to prepare the Leased Space to support the Structures. All Lessee's improvements, including but not limited to,

prefabricated buildings, generators, fencing, Structures and any other improvements will remain the property of Lessee. The Structures may be used for the transmission, reception and relay of communication signals, including, without limitation, radio frequency signals. Upon termination of this Lease, Lessee shall within ninety (90) days, restore the Leased Space to its original condition at the commencement of this Lease to a level of five (5) feet below grade, except for ordinary wear and tear and damages by the elements or damages over which Lessee had no control. Lessor shall receive monthly rental payments until such time as the tower is removed from the Premises.

12. Insurance. Lessor - Lessor, at all times during the Term of this Lease, will maintain in full force a comprehensive public liability insurance policy covering all of their operations, activities, liabilities and obligations on the Premises, having limits not less than One Million Dollars ($1,000,000) which will name Lessee as an additional insured party. On or before the Commencement Date, Lessor will give Lessee a certificate of insurance evidencing that such insurance is in effect and shall be issued by an insurance company authorized to do business in the state in which the Premises are located and shall provide thirty (30) days prior written notice to the Lessee of any cancellation of such policy. Lessor shall deliver to Lessee a renewal certificate evidencing that such insurance is in effect within ten business days of Lessee's request for such insurance.

Lessee - Lessee, at all times during the Term of this Lease, will maintain in full force a comprehensive public liability insurance policy covering all of its operations, activities, liabilities and obligations on the Leased Space, having limits not less than One Million Dollars ($1,000,000). On or before the Commencement Date, Lessee will give Lessor a certificate of insurance evidencing that such insurance is in effect. Lessee shall deliver to Lessor a renewal certificate evidencing that such insurance is in effect within ten (10) business days of Lessor's request for such certificate. The insurance policy shall be issued by an insurance company authorized to do business in the state in which the Leased Space is located and Lessee shall provide thirty (30) days prior written notice to the Lessor of any cancellation of such policy. Any insurance required to be provided by Lessee may be provided by a blanket insurance policy covering the Leased Space and other properties leased or owned by Lessee provided that such blanket insurance policy complies with all of the other requirements with respect to the type and amount of insurance.

13. Operating Expenses. Lessee will pay for all water, gas, heat, light, power, telephone service, and other public utilities furnished to the Leased Space and used by Lessee throughout the Term hereof, and all other costs and expenses of every kind whatsoever in connection with the use, operation, and maintenance of the Leased Space by Lessee and all activities conducted thereon by Lessee. Tenant shall install separate meters for Lessee's utility usage, provided such installations are permitted by the local utility company. Future sublessees shall install separate meters for their utility usage, provided such installations are permitted by the local utility company.

14. Taxes. Lessee will pay any personal property taxes assessed on, or any portion of the taxes attributable to the Structures. Lessor will pay when due all real property taxes and all other fees and assessments attributable to the Premises.

15. Maintenance of Leased Space. Lessee will use best efforts to maintain the Leased Space in good condition and state of repair. Except insofar as Lessee is made responsible by this Lease, Lessor will maintain the Premises surrounding the Leased Space in good condition and state of repair.

16. Hold Harmless. Lessor will be held harmless by Lessee from any liability (including reimbursement of reasonable attorneys' fees and all costs) for damages to any person or any property in or upon the Leased Space, which was caused in whole or in part by any action or inaction of the Lessee, its agents, servants, employees, licensees or invitees, or for damages to any person or property resulting from the actions of Lessee (including damages caused by or resulting from the existence of the Structures) on the Leased Space, unless the damages are caused by, or are the result of, the willful misconduct or negligence of Lessor or any of Lessor's agents, servants, employees, licensees or invitees. Notwithstanding any provisions herein to the contrary, it is understood and agreed that all property kept, installed, stored or maintained in or upon the Leased Space by Lessee will be so installed, kept, stored or maintained at the risk of Lessee. Lessor will not be responsible for any loss or damage to equipment owned by Lessee which might result from tornadoes, lightning, wind storms, or other Acts of God; provided, however, Lessor will be responsible for, and agrees to hold Lessee harmless from any liability (including reimbursement of reasonable legal fees and all costs), for damages to any person or any property in or upon the Premises or Leased Space arising out of the willful misconduct or negligence of Lessor or any of Lessor's agents, servants, employees, licensees or invitees. Except for willful misconduct, Lessee will in no event be liable in damages for Lessor's business loss, business interruption or other consequential damages of whatever kind or nature, regardless of the cause of the damages, and Lessor, and anyone claiming by or through Lessor, expressly waives all claims for the damages.

17. Termination Rights.

(a) Lessee may terminate this Lease, at its option, after giving Lessor not less than ninety (90) days prior written notice to cure, if: (i) any governmental agency denies a request by Lessee for a permit, license or approval which is required for Lessee to construct or operate the Structures on the Leased Space or any such permit is either revoked or not renewed; (ii) Lessee determines that technical problems or radio interference problems from other antennas or from nearby radio transmitting facilities, which problems cannot reasonably be corrected, impair or restrict Lessee from using the Leased Space for Lessee's intended purpose; (iii) Lessee determines that it does not have acceptable and legally enforceable means of ingress and egress to and from the Leased Space; (iv) Lessor does not have legal or sufficient ownership of or title to the Leased Space or Premises or the authority to enter into this Lease; (v) utilities necessary for Lessee's contemplated use of the Leased Space are not available; (vi) the Leased Space is damaged or destroyed to an extent which prohibits or materially interferes with Lessee's use of the Leased Space or Lessee's equipment and attachments thereto; (vii) the Premises now or hereafter contains a Hazardous Material; (viii) Lessee is unable to obtain a Subordination, Non-disturbance and Attornment Agreement; (ix) a material default by Lessor occurs; (x) Lessor fails to perform any of the material covenants or provisions of this Lease or if any representation or warranty contained herein is found to be untrue; (xi) the Leased Space is the subject of a condemnation proceeding or taking by a governmental authority, or quasi-governmental authority with the power of condemnation, or if the Leased Space is transferred in lieu of condemnation (rent will be abated during the period of condemnation or taking); (xii) the use of the site will not sufficiently benefit Lessee economically or commercially; (xiii) if Lessee determines, in its sole discretion that it will not be viable to use the site for its intended purpose; or (xiv) if Lessee determines, in its sole discretion, that it will

be unable to use the site for any reason. In the event of termination by Lessee or Lessor pursuant to this provision, Lessee will be relieved of all further liability hereunder, except for Lessee's obligations under Paragraphs 1(c), 11, 16, 23, 25, 26 and 32, and any Rent and other obligations of Lessee which have accrued prior to termination, all of which shall survive the termination of this Lease Any rental fees paid prior to the termination date will be retained by Lessor. In the event of termination by Lessee or Lessor pursuant to this provision, Lessee will be relieved of all further liability hereunder, except for Lessee's obligations under Paragraphs 1(c), 11, 16, 23, 25, 26 and 32, and any Rent and other obligations of Lessee which have accrued prior to termination, all of which shall survive the termination of this Lease. Any rental fees paid prior to the termination date will be retained by Lessor. In the event Lessor fails to perform its obligations under this Lease for any reason other than Lessee's breach, Lessee may pursue all remedies available at law and in equity. In the event Lessor fails to comply with the terms of this Lease, Lessee may, in its sole and absolute discretion, cure any such default, and to the extent Lessee incures any expenses in connection with such cure (including but not limited to the amount of any real property taxes Lessee pays on behalf of Lessor), Lessor agrees to promptly reimburse Lessee for such expenses incurred and hereby grants Lessee a security interest and lien on the Premises, to secure Lessor's obligation to repay such amounts to Lessee. In addition, Lessee may offset the amount of any such expenses incurred against any rent payable hereunder.

(b) Lessor may only terminate this Lease, at its option, in the event of a material default by Lessee or Lessee's failure to pay Rent when due, which default or failure is not cured within sixty (60) days after Lessee's receipt of written notice of such default or failure. No such failure to cure a material default, however, will be deemed to exist if Lessee has commenced to cure such default within said period and provided that such efforts are prosecuted to completion with reasonable diligence. Delay in curing a material default will be excused if due to causes beyond the reasonable control of Lessee.

18. Exclusivity. As part of Lessee's right to the undisturbed use and enjoyment of the Leased Space, Lessor shall not at any time during the Option Period or the Term of this Lease (i) use or suffer or permit another person to use any portion of the Premises or any adjacent parcel of land now or hereafter owned, leased or managed by Lessor for the uses permitted herein or other uses similar thereto except for the use by Lessor of its own municipal communications system as permitted under Section 2 above, or (ii) grant any interest in or an option to acquire any interest in any portion of the Premises that permits (either during the Option Period or the Term of this Lease) any of the uses permitted under this Lease without the prior written consent of Lessee, in Lessee's sole discretion.

19. Binding on Successors. The covenants and conditions contained herein will apply to and bind the heirs, successors, executors, administrators and assigns of the parties hereto. Further, this Lease will run with the land and all subsequent purchasers will be subject to the terms and conditions specified herein.

20. Access to Leased Space/Premises. Lessee shall have at all times during the Term the right of access to and from the Leased Space and all utility installations servicing the Leased Space on a 24 hours per day/7 days per week basis, on foot or by motor vehicle, including trucks and heavy machinery (including the right to park such vehicles, trucks and machinery within the Easements and the Premises within twenty (20) feet and adjacent to the Leased Space and the Easements), for the installation and maintenance of utility wires, cables, conduits and pipes over, under and along the right-of-way extending from the nearest accessible public right-of-way.

21. Governing Law. The parties intend that this Lease and the relationship of the parties will be governed by the laws of the State in which the Leased Space is located.

22. Entire Lease. All of the representations and obligations of the parties are contained herein, and no modification, waiver or amendment of this Lease or of any of its conditions or provisions will be binding upon a party unless in writing signed by that party or a duly authorized agent of that party empowered by a written authority signed by that party. The waiver by any party of a breach of any provision of this Lease will not operate or be construed as a waiver of any subsequent breach of that provision by the same party, or of any other provision or condition of this Lease.

23. Survey and Testing. Lessee will have the right during the Term of this Lease (and the Option Period, if applicable) to survey, soil test, and make any other investigations necessary to determine if the surface and subsurface of the Leased Space are suitable for construction and operation of the Structures. If Lessee, prior to completion of the Structures determines that for any reason the surface or subsurface of the Leased Space is not suitable to construct and operate the Structures, this Lease, upon written notice given to Lessor prior to completion of the Structures will become null and void; provided that at Lessee's sole expense the Leased Space will be promptly restored to the extent contemplated by the Lessee Improvements section above and provided further that Lessee will deliver copies of all soil tests and investigation reports to Lessor.

24. Oil, Gas and Mineral Rights. Lessor does not grant, lease, let or demise hereby, but expressly excepts and reserves here from all rights to oil, gas and other minerals in, on or under and that might be produced or mined from the Leased Space; provided, however, that no drilling or other activity will be undertaken on or beneath the surface of the Leased Space or Easements area to recover any oil, gas or minerals. This Lease is given and accepted subject to the terms and provisions of any valid oil, gas and mineral lease covering the Leased Space or any part thereof, now of record in the office of the County Clerk, provided, however, that any future oil, gas or mineral lease covering the above-described lands or any part thereof will be in all respects subordinate and inferior to the rights, privileges, powers, options, immunities, and interests granted to Lessee under the terms of this Lease.

25. Hazardous Waste.

(a) The term "Hazardous Materials" will mean any substance, material, waste, gas or particulate matter which is regulated by the local governmental authority where the Leased Space is located, the State in which the Leased Space is located, or the United States Government, including, but not limited to, any material or substance which is (i) defined as a "hazardous waste," "hazardous material," "hazardous substance," "extremely hazardous waste," or restricted hazardous waste" under any provision of state or local law, (ii) petroleum, (iii) asbestos, (iv) polychlorinated biphenyl, (v) radioactive material, (vi) designated as a "hazardous substance" pursuant to Section 311 of the Clean Water Act, 33 U.S.C. '1251 et seq. (33 U.S.C. '1317), (vii) defined as a "hazardous waste" pursuant to Section 1004 of the Resource Conservation and Recovery Act, 42 U.S.C. '6901 et seq. (42 U.S.C. '6903), or (viii) defined as a "hazardous substance" pursuant to Section 101 of the Comprehensive Environmental Response, Compensation, and Liability Act. 42 U.S.C. '9601 et Seq. (42) U.S.C. '9601). The term "Environmental Laws" will mean all

statutes specifically described in the foregoing sentence and all applicable federal, state and local environmental health and safety statutes, ordinances, codes, rules, regulations, orders and decrees regulating, relating to or imposing liability or standards concerning or in connection with Hazardous Materials.

(b) Lessor represents and warrants that, to the best of Lessor's knowledge, (i) the Leased Space has not been used for the use, manufacturing, storage, discharge, release or disposal of hazardous waste, (ii) neither the Leased Space nor any part thereof is in breach of any Environmental Laws, (iii) there are no underground storage tanks located on or under the Leased Space, and (iv) the Leased Space is free of any Hazardous Materials that would trigger response or remedial action under any Environmental Laws or any existing common law theory based on nuisance or strict liability. If Lessor subsequently becomes aware of or receives notice that any of the foregoing is incorrect, Lessor will properly take any and all remedial removal action as required by law to clean up the Leased Space. (c) Lessor and Lessee each agree to be responsible for and to hold harmless the other, its officers, directors, partners, affiliates, successors and assigns from and against any liability (including reimbursement of reasonable legal fees and all costs) suffered or incurred by such other party as a result of any Hazardous Materials introduced onto the Leased Space or Premises by the responsible party or its agents.

(d) Lessor represents and warrants to Lessee that Lessor has received no notice that the property or any part thereof is, and, to the best of its knowledge and belief, no part of the Premises is located within an area that has been designated by the Federal Emergency Management Agency, the Army Corps of Engineers or any other governmental body as being subject to special hazards.

(e) The covenants of this section will survive and be enforceable and will continue in full force and effect for the benefit of Lessee and its subsequent transferees, successors and assigns and will survive the Term of this Lease.

26. Mechanic's and Landlord's Liens. Lessee will not cause any mechanic's or materialman's lien to be placed on the Leased Space and Lessee agrees to indemnify, defend and hold harmless Lessor from any such lien from a party claiming by, through or under Lessee. Additionally, Lessor disclaims and waives any now existing or hereafter arising landlord's lien or other statutory or non-statutory lien or security interest in Lessee's and/or its sublessees' communication facilities, equipment, improvement, fixtures or other property.

27. Headings. The headings of sections and subsections are for convenient reference only and will not be deemed to limit, construe, affect, modify or alter the meaning of the sections or subsections.

28. Time of Essence. Time is of the essence of Lessor's and Lessee's obligations under this Lease.

29. Severability. If any section, subsection, term or provision of this Lease or the application thereof to any party or circumstance will, to any extent, be invalid or unenforceable, the remainder of the section, subsection, term or provision of this Lease or the application of same to parties or circumstances other than those to which it was held invalid or unenforceable, will not be affected thereby and each remaining section, subsection, term or provision of this Lease will be valid or enforceable to the fullest extent permitted by law.

30. Real Estate Broker. Lessor represents and warrants that Lessor has not signed a listing agreement, dealt with or otherwise agreed to pay a broker's commission, finder's fee or other like compensation to anyone in connection with the lease of the Leased Space or the transaction contemplated by this Lease and Lessor agrees to indemnify and hold Lessee harmless from and against any such claims or costs, including attorneys' fees, incurred as a result of the transaction contemplated by this Lease.

31. Further Assurances. During the Option Period and Term of this Lease, each of the parties agree to do such further acts and things and to execute and deliver the additional agreements and instruments (including, without limitation, requests or applications relating to zoning or land use matters affecting the Structures) as the other may reasonably require to consummate, evidence or confirm this Lease or any other agreement contained herein in the manner contemplated hereby. If Lessor fails to provide requested documentation within thirty (30) days of Lessee's request, or fails to provide any Non-Disturbance Agreement required in this Lease, Lessee may withhold and accrue the monthly rental until such time as all such documentation is received by Lessee.

32. Right to Register or Record. Lessee may request that Lessor execute a Memorandum of Option and Land Lease, Memorandum of Land Lease or Short Form of Lease (collectively a "Memo") for recording in the public records. Lessor agrees and authorizes Lessee to attach and/or insert a certified legal description of the Leased Space and Easements, once complete, to the Memo and record same in the public records. Upon the termination of this Lease or the occupancy under this Lease by the Lessee, each party agrees to execute and deliver to the other party, in recordable form, a reasonable document cancelling and terminating the Memo, which, once complete, shall be recorded in the public records.

33. Interpretation. Each party to this Lease and its counsel have reviewed and had the option to revise this Lease. The normal rule of construction to the effect that any ambiguities are to be resolved against the drafting party will not be employed in the interpretation of this Lease or of any amendments or exhibits to this Lease.

34. Condemnation. Lessor shall fully advise Lessee in a timely manner of all condemnation proceedings or prospective condemnation proceedings in order that Lessee may fully protect and prosecute its rights and claims relating to the Leased Space. If the whole or any part of the Leased Space shall be taken or condemned by, or transferred in lieu of condemnation to, any governmental or quasi governmental authority or agency with the power of condemnation (a "Condemning Authority") during the Option Period or the Term of this Lease, Lessee shall be entitled to compensation from any condemnation award or payment in lieu thereof actually paid by the Condemning Authority (an "Award"), shall be divided as follows: Lessor shall be entitled to the value of it's underlying interest in the land actually taken, and Lessee shall be entitled to the balance of the Award as compensation for the taking of or damage to its leasehold interest, including but limited to the value of the Structures and any other Lessee improvements.

Lessor agrees that, other than Awards for any land owned by Lessor and taken by the Condemning Authority, all of such Awards paid shall first go to Lessee for its losses and damages as described above in this Paragraph 34. In the event only a portion of the Premises, which portion does not include the whole of the Leased Space, shall be taken or condemned by, or transferred in lieu of condemnation to any governmental or quasi-governmental authority or agency with the power of condemnation during the Option Period or the Term of this Lease, Lessee shall have the option to either: (1) terminate this Lease; or (2) continue in possession of the property pursuant to the terms of this Lease with a proportionate reduction in Rent equal to that portion,

if any, of the Leased Space so taken, condemned or transferred in lieu of condemnation. In either event, Lessee shall be entitled to share any award and pursue claims for compensation as described above. Nothing contained herein shall prohibit Lessee from making its own claims against any condemning authority for any losses or damages Lessee shall incur as a result of a condemnation, or sale in lieu of condemnation.

35. Right of First Refusal. If at any time during the Option Period or the Term of this Lease, Lessor receives a bona fide written offer from a third person (the "Offer") to sell, assign, convey, lease, factor or otherwise transfer or create any interest in the current or future Rent, this Lease, the Leased Space or the Premises, or any portion thereof, which Lessor desires to accept, Lessor shall first give Lessee written notice (including a copy of the proposed contract) of such Offer prior to becoming obligated under such Offer, with such notice giving Lessee the right to acquire the interest described in the Offer on the terms set forth in the Offer. Lessee shall have a period of thirty (30) days after receipt of Lessor's notice and terms to exercise Lessee's right of first refusal by notifying Lessor in writing. If Lessee has not exercised its right of first refusal in writing to Lessor within such thirty (30) day period, the terms of the Offer will be deemed rejected. Any action taken by Lessor as part of a scheme or contrivance to circumvent the intent of this Section will cause the monthly Rent payable to Lessor or its successors or assigns to be reduced by fifty percent (50%) for all terms remaining under this Lease.

36. Generator. If Lessee installs a temporary (back-up) generator due to a power outage impacting sublessees' ability to operate their equipment, the generator shall be housed adjacent to the Premises in a location mutually agreed upon by Lessor and Lessee. If at some point in the future sublessees install a permanent (back-up) generator, the generator shall be housed inside the equipment shelter.

37. Date of Lease. The parties acknowledge that certain obligations of Lessor and Lessee are to be performed within certain specified periods of time which are determined by reference to the date of execution of this Lease. The parties therefore agree that wherever the term "date of execution of this Lease," or words of similar import are used herein, they will mean the date upon which this Lease has been duly executed by Lessor and Lessee whichever is the later to so execute this Lease. The parties further agree to specify the date on which they execute this Lease beneath their respective signatures in the space provided and warrant and represent to the other that such a date is in fact the date on which each duly executed his or her name.

COMMENCEMENT DATE: The date that Lessee exercises its Option.

IN WITNESS WHEREOF, the parties hereto have executed this Lease on the last day and year specified below.

LESSOR: VILLAGE OF PLEASANT PRAIRIE,
a Wisconsin municipal corporation

By: _____
John P. Steinbrink

Title: Village President

Date: _____

Witness: _____

Print Name: _____

Witness: _____

Print Name: _____

Notary Public:
I do hereby certify that JOHN P. STEINBRINK, who is personally known to me, or who has proved by sufficient evidence to be the person named herein, personally appeared before me this day and acknowledged the due execution of the foregoing instrument.

Witness my hand and seal this _____ day of _____, 20____.

_____
Notary Signature

LESSEE: SBA TOWERS IX, LLC,
a Delaware limited liability company

By: _____
Alyssa Houlihan

Title: Vice President, Site Leasing

Date: 8/23/16

Witness: _____

Print Name: Gabriella Ramirez

Witness: _____

Print Name: Julie Rampersaud

Notary Public:
I do hereby certify that ALYSSA HOULIHAN, who is personally known to me, or who has proved by sufficient evidence to be the person named herein, personally appeared before me this day and acknowledged the due execution of the foregoing instrument.

Witness my hand and seal this 23 day of August, 2016.

Wendy Carrick
Notary Signature

WENDY CARRICK
MY COMMISSION # FF 068697
EXPIRES: November 30, 2017
Bonded Thru Notary Public Underwriters

Site Name: Wilmot Rd
Site No.: WI17308-B

SBA

EXHIBIT A

LEASED SPACE

The Leased Space shall consist of 4,500 (60' x 75') square feet ground space along with easement rights for access to the Leased Space and parking by vehicle, trucks, heavy machinery or foot from the nearest public way and for the installation of utility wires, poles, cables, conduits and pipes on the Premises in the approximate locations as depicted below:

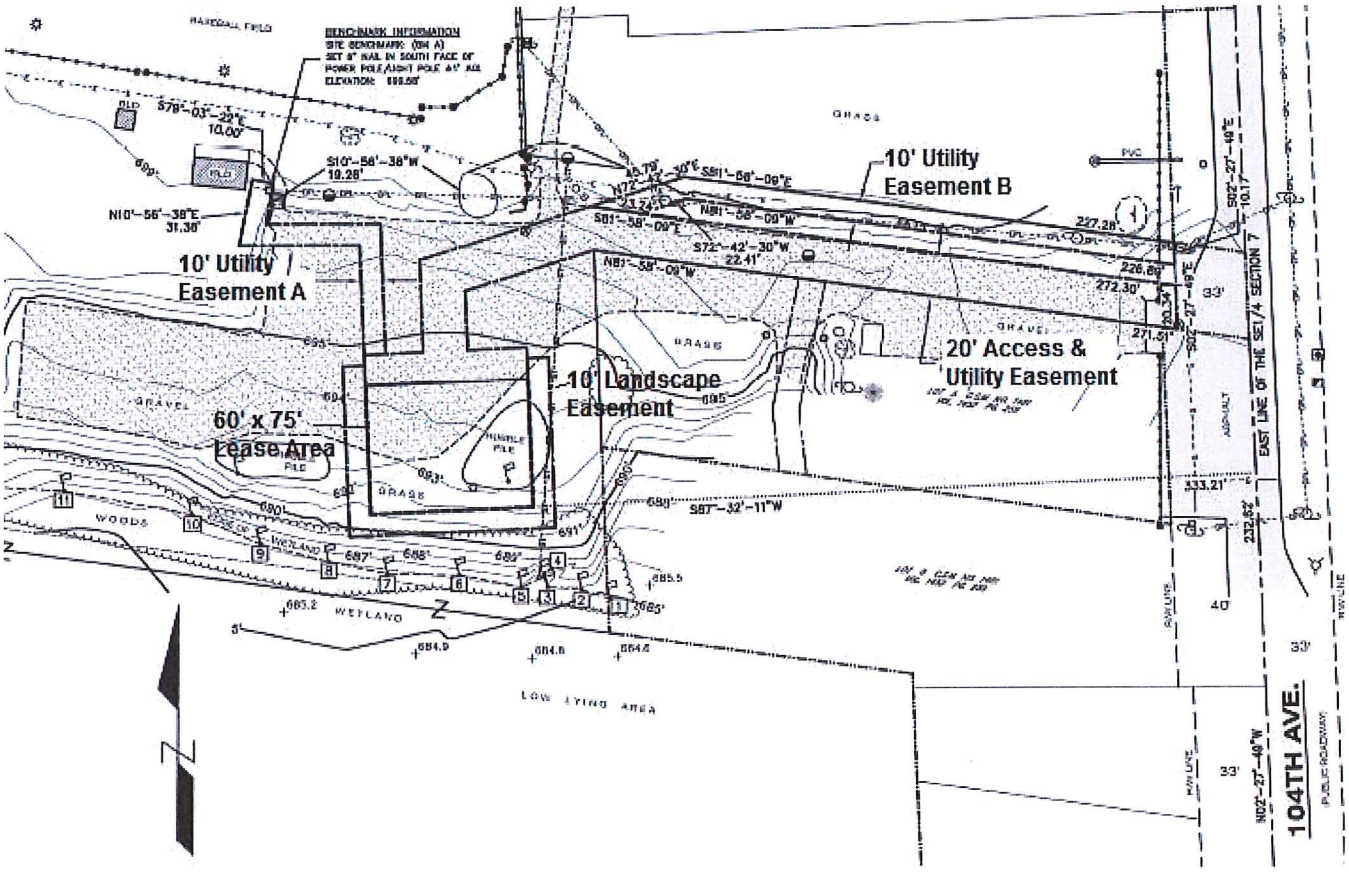

LEASED SPACE

A part of the Southeast Quarter (SE1/4) of the Southeast Quarter (SE1/4) of Section Seven (7), Township One (1) North, Range Twenty-Two (22) East, Village of Pleasant Prairie, Kenosha County, Wisconsin containing 4,500 square feet (0.103 acres) of land and being described by:

Commencing at the Southeast Corner of said Section 7; thence N02°-27'-49"W along the East line of the SE1/4 of said Section 7, a distance of 232.62 feet; thence S87°-32'-11"W 333.21 feet to the point of beginning; thence S87°-32'-12"W 75.00 feet; thence N02°-27'-48"W 60.00 feet; thence N87°-32'-12"E 75.00 feet; thence S02°-27'-48"E 60.00 feet to the point of beginning; being subject to any and all easements and restrictions of record.

EXHIBIT A - Continued

20' WIDE UTILITY AND INGRESS/EGRESS EASEMENT

An Utility and Ingress/Egress Easement being part of the Southeast Quarter (SE1/4) of the Southeast Quarter (SE1/4) of Section Seven (7), Township One (1) North, Range Twenty-Two (22) East, Village of Pleasant Prairie, Kenosha County, Wisconsin containing 8,725 square feet (0.200 acres) of land and being described by:

Commencing at the Southeast Corner of said Section 7; thence N02°-27'-49"W along the East line of the SE1/4 of said Section 7, a distance of 232.62 feet; thence S87°-32'-11"W 333.21 feet; thence S87°-32'-12"W 75.00 feet; thence N02°-27'-48"W 60.00 feet to the point of beginning; thence continue N02°-27'-48"W 15.00 feet; thence N87°-32'-12"E 27.50 feet; thence N02°-27'-48"W 43.01 feet; thence N72°-42'-30"E 82.72 feet; thence S81°-58'-09"E 272.30 feet to a point on the West right of way line of 104th Avenue; thence S02°-27'-49"E along said West line, 20.34 feet; thence N81°-58'-09"W 271.51 feet; thence S72°-42'-30"W 62.83 feet; thence S02°-27'-48"E 27.62 feet; thence N87°-32'-12"E 27.50 feet; thence S02°-27'-48"E 15.00 feet; thence S87°-32'-12"W 75.00 feet to the point of beginning; being subject to any and all easements and restrictions of record.

10' WIDE UTILITY EASEMENT "A"

An Utility Easement being part of the Southeast Quarter (SE1/4) of the Southeast Quarter (SE1/4) of Section Seven (7), Township One (1) North, Range Twenty-Two (22) East, Village of Pleasant Prairie, Kenosha County, Wisconsin containing 1,355 square feet (0.031 acres) of land and being described by:

Commencing at the Southeast Corner of said Section 7; thence N02°-27'-49"W along the East line of the SE1/4 of said Section 7, a distance of 232.62 feet; thence S87°-32'-11"W 333.21 feet; thence S87°-32'-12"W 75.00 feet; thence N02°-27'-48"W 75.00 feet to the point of beginning; thence continue N02°-27'-48"W 50.85 feet; thence S90°-00'-00"W 55.84 feet; thence N10°-56'-38"E 31.38 feet; thence S79°-03'-22"E 10.00 feet; thence S10°-56'-38"W 19.26 feet; thence S90°-00'-00"E 53.30 feet; thence S02°-27'-48"E 60.43 feet; thence S87°-32'-12"W 10.00 feet to the point of beginning; being subject to any and all easements and restrictions of record.

10' WIDE UTILITY EASEMENT "B"

An Utility Easement being part of the Southeast Quarter (SE1/4) of the Southeast Quarter (SE1/4) of Section Seven (7), Township One (1) North, Range Twenty-Two (22) East, Village of Pleasant Prairie, Kenosha County, Wisconsin containing 2,612 square feet (0.060 acres) of land and being described by:

Commencing at the Southeast Corner of said Section 7; thence N02°-27'-49"W along the East line of the SE1/4 of said Section 7, a distance of 232.62 feet; thence S87°-32'-11"W 333.21 feet; thence S87°-32'-12"W 75.00 feet; thence N02°-27'-48"W 75.00 feet; thence N87°-32'-12"E 27.50 feet; thence N02°-27'-48"W 43.01 feet; thence N72°-42'-30"E 82.72 feet to the point of beginning; thence continue N72°-42'-30"E 45.79 feet; thence S81°-58'-09"E 227.28 feet to a point on the West right of way line of 104th Avenue; thence S02°-27'-49"E along said West line, 10.17 feet; thence N81°-58'-09"W 226.89 feet; thence S72°-42'-30"W 22.41 feet; thence N81°-58'-09"W 23.24 feet to the point of beginning; being subject to any and all easements and restrictions of record.

10' WIDE LANDSCAPE EASEMENT

A Landscape Easement being part of the Southeast Quarter (SE1/4) of the Southeast Quarter (SE1/4) of Section Seven (7), Township One (1) North, Range Twenty-Two (22) East, Village of Pleasant Prairie, Kenosha County, Wisconsin containing 2,350 square feet (0.054 acres) of land and being described by:

Commencing at the Southeast Corner of said Section 7; thence N02°-27'-49"W along the East line of the SE1/4 of said Section 7, a distance of 232.62 feet; thence S87°-32'-11"W 333.21 feet to the point of beginning; thence S87°-32'-12"W 75.00 feet; thence N02°-27'-48"W 70.00 feet; thence S87°-32'-12"W 10.00 feet; thence S02°-27'-48"E 80.00 feet; thence N87°-32'-12"E 95.00 feet; thence N02°-27'-48"W 80.00 feet; thence S87°-32'-12"W 10.00 feet; thence S02°-27'-48"E 70.00 feet to the point of beginning; being subject to any and all easements and restrictions of record.

Initials: _____

Initials: AM

EXHIBIT B

LEGAL DESCRIPTION OF THE PREMISES

PREMISES

Part of the Southeast Quarter of Section 7, Town 1 North, Range 22 East of the 4th Principal Meridian, lying and being in the Town of Pleasant Prairie, Kenosha County, Wisconsin, and being more particularly described as: beginning on the East line of said 1/4 section at a point 295.74 feet North from the Southeast Corner of said 1/4 section; thence North along the East line of said 1/4 section 40 feet; thence N 79° 30' 20" W parallel to the abandoned right-of-way of the Chicago & Northwestern Railway Company 335.61 feet; thence North parallel to the East line of said 1/4 section 126 feet; thence East at right angles to the East line of said 1/4 section 50 feet; thence North parallel to the East line of said 1/4 section 266.3 feet; thence West at right angles to the East line of said 1/4 section 431 feet; thence South parallel to the East line of said 1/4 section 540.8 feet to the Southerly line of said abandoned railway right-of-way; thence S 79° 30' 20" E along said Southerly line 418.03 feet; thence North parallel to the East line of said 1/4 section 178.82 feet; thence S 79° 30' 20" E parallel to said abandoned railway right-of-way 305.07 feet to the point of beginning.

Tax I.D. Number 91-4-122-074-0620 now known as 91-4-122-074-0649 (portion of).

Being the same property conveyed to Town of Pleasant Prairie, Grantee, from Edward J. Bohat and Helon L. Bohat, husband and wife, as joint tenants, Grantor, by Deed recorded 08/18/1965, as Book 708, Page 338 of the County Records.

Initials: _____

Initials: _____

EXHIBIT "C"

ANTENNA SITE AGREEMENT – SEE ATTACHED

ANTENNA SITE AGREEMENT

1. **Premises and Use**. **SBA TOWERS, LLC,** a Florida limited liability company ("Owner") leases to _____, a _____ corporation ("Tenant"), the site described below: Tower antenna space; Ground space for placement of Pad or Shelter ("Shelter") for Tenant's base station equipment consisting of approximately ____ square feet; and space required for Tenant's cable ladders, cable runs and cable bridges to connect telecommunications equipment and antennas, in the location shown on Exhibit A, together with a non-exclusive easement for reasonable access thereto and to the appropriate, in the discretion of Tenant, source of electric and telephone facilities (collectively, the "Site"). The Site will be used by Tenant for the purpose of installing, removing, replacing, modifying, maintaining and operating, at its expense, a telecommunications service system facility consisting of the antenna(s) and related equipment set forth on Exhibit B (the "Equipment"). If Tenant desires to place equipment on the Site in addition to that listed on Exhibit B, Owner and Tenant will negotiate the placement of the additional equipment and the associated increased rent. The placement of substitution equipment in accordance with Section 9 shall not constitute additional equipment unless the same shall utilize additional space or capacity. Tenant will use the Site in a manner which will not unreasonably disturb the occupancy of Owner's other tenants.

2. **Term**. The "Initial Term" of this Agreement shall be five (5) years beginning on the date set forth below ("Commencement Date") and terminating on the fifth anniversary of the Commencement Date. This Agreement will automatically renew for four (4) additional terms (each a "Renewal Term") of five (5) years each, unless either party provides notice to the other of its intention not to renew not less than one hundred and twenty (120) days prior to the expiration of the Initial Term or any Renewal Term. COMMENCEMENT DATE: The earlier of the date Tenant begins installation of its Equipment at the Site or _____, 2010.

3. **Rent**. Beginning on the Commencement Date rent will be paid in equal monthly installments of _____ and no/100 Dollars ($_____) ("Rent"), in advance, due on the first day of each month, partial months to be prorated on a thirty (30) day month. Rent will be increased annually on the anniversary of the Commencement Date (during the Initial and all Renewal Terms) by 5% of the monthly rate in effect for the prior year. This Agreement shall be effective on the date last executed by the parties provided that Rent shall be subject to change at the discretion of Owner if this lease is not executed by Tenant and returned to Owner by _____, 2010.

4. **Security Deposit**. Prior to the Commencement Date, Tenant will deposit with Owner an amount equal to ___ months' Rent ("Security Deposit"). Owner will have the right to draw against the Security Deposit in the event of any breach hereunder, including when any Rent becomes past due. If Owner elects to draw down the Security Deposit, Tenant must replenish the amounts so drawn within ten (10) days after written demand therefor by Owner. The Security Deposit will be retained in a non-interest bearing account.

5. **Title and Quiet Possession**. Owner represents and agrees (a) that it is in possession of the Site as fee owner or lessee under a ground lease ("Ground Lease"); (b) that if applicable, upon request from Tenant, Owner will provide to Tenant a copy of the Ground Lease with financial and other confidential terms redacted; (c) that it has the right to enter into this Agreement; (d) that the person signing this Agreement has the authority to sign; and (e) that Tenant is entitled to the quiet possession of the Site subject to zoning and other requirements imposed by governmental authorities, any easements, restrictions, or encumbrances of record throughout the Initial Term and each Renewal Term so long as Tenant is not in default beyond the expiration of any cure period. Notwithstanding anything to the contrary contained in this Agreement, if the Site is subject to a ground lease, either party may terminate this Agreement without further liability upon the termination or expiration of Owner's right to possession of the Site under the Ground Lease. Owner will not do, attempt, permit or suffer anything to be done which could be construed to be a violation of the Ground Lease. This Agreement is subordinate to any mortgage or deed of trust now of record against the Site. Promptly after this Agreement is fully executed, if requested by Tenant, Owner will request the holder of any such mortgage or deed of trust to execute a non-disturbance agreement in a form provided by Tenant, and Owner will cooperate with Tenant at Tenant's sole expense toward such an end to the extent that such cooperation does not cause Owner additional financial liability. Tenant will not, directly or indirectly, on behalf of itself or any third party, communicate, negotiate, and/or contract with the lessor of the Ground Lease, unless Owner's rights under the Ground Lease have been terminated.

6. **Assignment/Subletting**. Tenant may not assign or transfer this Agreement without the prior written consent of Owner, which consent will not be

unreasonably withheld, delayed or conditioned. However, Tenant may assign without the Owner's prior written consent to any party controlling, controlled by or under common control with Tenant provided that the assuming party has comparable credit quality to that of Tenant. Tenant may not sublease this Agreement. In no event will Tenant be relieved of any obligations or liability hereunder.

7. **Access and Security**. Tenant will have the reasonable right of access to the Tower where its Equipment is located; provided that Tenant must give Owner forty-eight (48) hours prior notice. Tenant will have unrestricted access twenty-four (24) hours a day seven (7) days a week to its Pad or Shelter. In the event of an emergency situation which poses an immediate threat of substantial harm or damage to persons and/or property (including the continued operations of Tenant's telecommunications equipment) which requires entry on the Tower, Tenant may enter same and take the actions that are required to protect individuals or personal property from the immediate threat of substantial harm or damage; provided that promptly after the emergency entry and in no event later than twenty-four (24) hours, Tenant gives telephonic and written notice to Owner of Tenant's entry onto the Site.

8. **Notices**. All notices must be in writing and are effective when deposited in the U.S. mail, certified and postage prepaid, or when sent via overnight delivery, to the address set forth below, or as otherwise provided by law.

Tenant:

Owner: SBA Towers, LLC
8051 Congress Avenue
2nd Floor
Boca Raton, FL 33487-1307
Attn: Site Administration
RE:

Rental Payments: SBA Towers, LLC
P.O. Box 945752
Atlanta, GA 30394-5752
Attn: Accounts Receivable
RE:

9. **Installation and Improvements**. Prior to installing or allowing any Equipment to be installed at the Site or making any changes, modifications or alterations to such Equipment, Tenant, at its expense, will obtain all required approvals and will submit to Owner plans, specifications and proposed dates of the planned installation or other activity, for Owner's approval which approval will not be unreasonably withheld, including, if requested by Owner, a tower loading study and/or an intermodulation study performed and certified by an independent licensed professional engineer. The approved plans will be deemed incorporated into this Agreement. All installation of or other work on Tenant's Equipment on the Tower will be at Tenant's sole expense and performed by Owner or one of its affiliates or subsidiaries. All installations, operation and maintenance of Equipment must be in accordance with Owner's policies set forth in Exhibit D. Owner reserves the right to prohibit operation of any Equipment it reasonably deems to be improperly installed, unsafe or not included in the installation design plan. Owner agrees to cooperate with Tenant's reasonable requests, at Tenant's expense, with respect to obtaining any required zoning approvals for the Site and any improvements. Upon termination or expiration of this Agreement, Tenant shall remove its Equipment and improvements and will restore the Site to the condition existing on the Commencement Date, except for ordinary wear and tear and insured casualty loss. If Tenant fails to remove its Equipment as specified in the preceding sentence, Tenant's Equipment will be subject to disconnection, removal, and disposal by Owner. If Tenant's Equipment remains on the Site after the termination or expiration date (even if it has been disconnected), Tenant will pay to Owner a hold-over fee equal to two hundred percent (200%) of the then-effective monthly Rent, prorated from the effective date of termination to the date the Equipment is removed from the Site. Owner will have the right (but not the obligation) to disconnect and remove Equipment from the Site. If, after the termination date, Owner disconnects and removes Equipment, Tenant will pay to Owner upon demand three hundred percent (300%) of the disconnection, removal and storage expenses incurred by or on behalf of Owner. If the Equipment is not reclaimed by Tenant within forty-five (45) days of its removal from the Site, Owner has the right to sell the Equipment and deduct therefrom any amounts due under this Agreement, returning the remainder to Tenant. Upon written notice by Owner to Tenant not less than five (5) business days beforehand, unless such notice cannot reasonably be provided in which event Owner will give Tenant the earliest possible reasonable notice, Tenant will cooperate with Owner in rescheduling its transmitting activities, reducing power, or interrupting its activities for limited periods of time in the event of an emergency or in order to permit the safe installation of new equipment or new facilities at the Site or to permit repair to facilities of any user of the Site or to the related facilities.

10. **Compliance with Laws**. Tenant agrees to take the Site in strictly "as is" condition. Owner represents that the Site, its property contiguous thereto, and all improvements located thereon, are in substantial compliance with building, life/safety, disability and other laws, codes and regulations of applicable

satisfactory evidence that all Equipment installed at the Site complies with federal regulations pertaining to radio-frequency radiation standards and is licensed with the FCC, if applicable. Owner accepts responsibility for the Site's compliance with all tower or building marking and lighting regulations promulgated by the Federal Aviation Administration "FAA" or the Federal Communications Commission "FCC," as applicable. Owner represents and warrants that the Site complies with all applicable tower or building marking or lighting regulations promulgated by the FAA or the FCC. Owner agrees that Tenant may install, at Tenant's sole cost and expense as required for Tenant's Equipment, a tower lighting alarm monitoring system (including, but not limited to, commercial power and a dedicated surveillance telephone line) to monitor the status of the tower/building lighting. Owner shall be solely responsible for reporting any lighting outages or malfunctions to the appropriate governmental authorities. Tenant's installation of such tower/building lighting alarm monitoring system will not relieve Owner of its primary responsibility for compliance with all applicable tower or building marking and lighting requirements. If Tenant installs a temporary generator as described above or contracts with Owner to place a permanent generator at the Site, (i) Owner and Tenant acknowledge that Tenant must comply with all applicable laws and regulations concerning the installation, operation, maintenance and removal of Tenant's generator and/or back up power supply including but not limited to obtaining any and all necessary government approvals and permits, and (ii) Tenant agrees to indemnify, defend and hold harmless Owner for any and all costs, claims, administrative orders, causes of action, fines and penalties which arise out of the installation, operation, maintenance and removal of the generator and or back up power supply used solely by Tenant, and (iii) Upon request of Owner, Tenant agrees to provide Owner with all relevant information concerning the Tenant's generator and/or back up power supply necessary for Owner to comply with any reporting obligations for which Owner, but not Tenant, is responsible as a result of statute or regulation.

11. **Insurance**. Tenant will procure and maintain a public liability policy, with limits of not less than $1,000,000 for bodily injury, $1,000,000 for property damage, $2,000,000 aggregate, which minimum Owner may require adjusting at each renewal term, with a certificate of insurance to be furnished to Owner within thirty (30) days of execution of this Agreement and prior to performing any work. Such policy will provide that cancellation will not occur without at least fifteen (15) days prior written notice to Owner. Tenant will cause Owner to be named as an additional insured on such policy.

12. **Interference**. Tenant understands that it is the intent of Owner to accommodate as many users as possible and that Owner may rent space to any other entity or person(s) desiring its facilities. Tenant shall not cause, by its transmitter or other activities, including the addition of any equipment at a future date, interference to Owner or other tenants that have previously commenced rental payments. Tenant shall provide Owner with a list of frequencies to be used at the Site prior to putting said frequencies into operation. If interference occurs which involves Tenant, Owner may require that an intermodulation study be conducted at Tenant's cost. If Owner determines that the interference is the responsibility of Tenant, Owner will notify Tenant and Tenant shall have five (5) business days from date of notice to correct the interference and if not corrected, Tenant shall cease, and Owner shall have all rights to any legal means necessary including injunctive relief and self help remedies to cause Tenant to cease transmission, except for intermittent testing for the purpose of correcting the interference. If interference cannot be corrected within sixty (60) calendar days from Tenant's receipt of Owner's notice, then Owner may terminate this Agreement without further obligations to Tenant. Further, if Owner determines that another tenant at the Site is causing interference to Tenant and the interference is not corrected within sixty (60) days from Owner's determination, and such interference precludes Tenant from using the Site for its intended purpose, Tenant may terminate this Agreement. Owner will require substantially similar interference language as outlined in this paragraph in all future Tenant Agreements related to this Site.

13. **Utilities**. Tenant will pay for all utilities used by it at the Site and Tenant will install its own electric meter. Tenant will be responsible directly to the appropriate utility companies for all utilities required for Tenant's use of the Site. However, Owner agrees to cooperate with Tenant, at Tenant's expense, in its efforts to obtain utilities from any location provided by the Owner or the servicing utility. Temporary interruption in the power provided by the facilities will not render Owner liable in any respect for damages to either person or property nor relieve Tenant from fulfillment of any covenant or agreement hereof. If any of Tenant's communications Equipment fails because of loss of any electrical power, and the restoration of the electrical power is within the reasonable control of Owner, Owner will use reasonable diligence to restore the electrical power promptly, but will have no claim for damages on account of an interruption in electrical service occasioned thereby or resulting therefrom.

14. **Relocation Right**. If determined necessary by Owner to relocate the tower, Owner will have the right to relocate the telecommunications facility of Tenant, or any part thereof, to an alternate tower location ("Relocation Site") on Owner's property; provided, however, that such relocation will (i) be at Tenant's sole cost and expense, (ii) not unreasonably result in any interruption of the communications service

Tenant, or any part thereof, to an alternate tower location ("Relocation Site") on Owner's property; provided, however, that such relocation will (i) be at Tenant's sole cost and expense, (ii) not unreasonably result in any interruption of the communications service provided by Tenant on Owner's property, and (iii) not impair, or in any manner alter, the quality of communications service provided by Tenant on and from Owner's property. Owner will exercise its relocation right by delivering written notice to Tenant. In the notice, Owner will propose an alternate site on Owner's property to which Tenant may relocate its Equipment. Tenant will have sixty (60) days from the date it receives the notice to evaluate Owner's proposed Relocation Site, during which period Tenant will have the right to conduct tests to determine the technological feasibility of the proposed Relocation Site. Failure to respond in writing within the sixty (60) day period will be deemed an approval. If Tenant disapproves such Relocation Site, then Owner may thereafter propose another Relocation Site by notice to Tenant in the manner set forth above. Tenant's disapproval of a Relocation Site must be reasonable. Tenant will have a period of ninety (90) days after completion of the Relocation Site to relocate its Equipment at Tenant's expense to the Relocation Site. Owner and Tenant hereby agree that the Relocation Site (including the access and utility right-of-way) may be surveyed by a licensed surveyor at the sole cost of Tenant, and such survey will then supplement Exhibit A and become a part hereof.

15. **Termination by Tenant**. Tenant may terminate this Agreement at any time by notice to Owner without further liability if (i) Owner fails to have proper possession of the Site or authority to enter into this Agreement; or (ii) Tenant does not obtain, after making diligent efforts, all permits or other approvals (collectively, "approval") required from any governmental authority or any easements required from any third party to operate the telecommunications system facility, or if any such approval is canceled, expires, is withdrawn or terminated by such governmental authority or third party following Tenant's diligent efforts to maintain such approval.

16. **Default**. If the Rent or other amount due hereunder is not paid in accordance with the terms hereof, Tenant will pay interest on the past due amounts at the lesser of (i) the rate of one and one-half percent (1.5%) per month, or (ii) the maximum interest rate permitted by applicable law. If either party is in default under this Agreement for a period of (a) ten (10) days following receipt of notice from the non-defaulting party with respect to a default which may be cured solely by the payment of money, or (b) thirty (30) days following receipt of notice from the non-defaulting party with respect to a default which may not be cured solely by the payment of money, then, in either event, the non-defaulting party may pursue any remedies available to it against the defaulting party under applicable law, including, but not limited to, the right to terminate this Agreement. Further, Owner may accelerate and declare the entire unpaid Rent for the balance of the existing Term to be immediately due and payable forthwith. If the non-monetary default may not reasonably be cured within a thirty (30) day period, this Agreement may not be terminated if the defaulting party commences action to cure the default within such thirty (30) day period and proceeds with due diligence to fully cure the default.

17. **Taxes**. Tenant shall pay all taxes, including, without limitation, sales, use and excise taxes, and all fees, assessments and any other cost or expense now or hereafter imposed by any government authority in connection with Tenant's payments to Owner, Tenant's Equipment or Tenant's use of the Site. In addition, Tenant shall pay that portion, if any, of the personal property taxes or other taxes attributable to Tenant's Equipment. Tenant shall pay as additional rent any increase in real estate taxes levied against the Site and Tenant's Equipment attributable to the Tenant's use and occupancy of the Site. Payment shall be made by Tenant within fifteen (15) days after presentation of receipted bill and/or assessment notice which is the basis for the demand.

18. **Indemnity**. Owner and Tenant each indemnifies the other against and holds the other harmless from any and all costs (including reasonable attorneys' fees and costs) and claims of liability or loss which arise out of the use and/or occupancy of the Site by the indemnifying party including, without limitation, any damage occurring outside of the Site in connection with Tenant's installation of Equipment. This indemnity does not apply to any claims arising from the gross negligence or intentional misconduct of the indemnified party. Except for its own acts of gross negligence or intentional misconduct, Owner will have no liability for any loss or damage due to personal injury or death, property damage, loss of revenues due to discontinuance of operations at the Site, libel or slander, or imperfect or unsatisfactory communications experienced by the Tenant for any reason whatsoever.

19. **Hazardous Substances**. Owner represents that it has no knowledge of any substance, chemical or waste (collectively, "substance") on the Site that is identified as hazardous, toxic or dangerous in any applicable federal, state or local law or regulation. Tenant or Owner will not introduce or use any such substance on the Site in violation of any applicable law, or permit any discharge or release of such substance on the Site.

20. **Liens**. Tenant will not permit any mechanics, materialman's or other liens to stand against the Site for any labor or material furnished by Tenant in connection with work of any character performed on

the Site by or at the direction of the Tenant. In the event that any notice of lien will be filed or given, Tenant will, within thirty (30) days after the date of filing cause the same to be released or discharged by either payment, deposit, or bond. Owner will be indemnified by Tenant from and against any losses, damages, costs, expenses, fees or penalties suffered or incurred by Owner on account of the filing of the claim or lien.

21. **Casualty or Condemnation**. In the event of any damage, destruction or condemnation of the Site, or any part thereof, not caused by Tenant that renders the Site unusable or inoperable, Owner will have the right, but not the obligation, to provide an alternate location, whether on the same Site or another Site, or to terminate this Agreement within thirty (30) days after the damage, destruction or condemnation. If Owner does not terminate this Agreement: (i) the Rent payable hereunder will be reduced or abated in proportion to the actual reduction or abatement of use of the Site by Tenant; and (ii) Owner will make any necessary repairs to the Site caused by the damage or destruction and will be entitled to use any and all insurance proceeds to pay for any repairs. In the event Owner has not proceeded to repair, replace or rebuild the Site within sixty (60) days after the damage or destruction, after giving thirty (30) days written notice and Owner's failure to comply within that time frame, then Tenant may terminate this Agreement. Owner will in no event be liable to Tenant for any damage to or loss of Tenant's Equipment, or loss or damage sustained by reason of any business interruption suffered by reason of any condemnation, act of God, by Tenant's act or omission, or Tenant's violation of any of the terms, covenants or conditions of this Agreement, (unless caused solely by Owner's intentional misconduct or gross negligence). The terms and conditions of this Section 21 shall survive the termination of this Lease. Owner acknowledges that Tenant may have certain emergency procedures that Tenant may desire to implement, including the temporary location of a cell on wheels on the Site, in the event of a casualty. To the extent possible, Owner will cooperate with Tenant in Tenant's implementation of its emergency responses as the same may exist from time to time.

22. **Confidentiality**. Tenant agrees not to discuss publicly, advertise, nor publish in any newspaper, journal, periodical, magazine, or other form of mass media, the terms or conditions of this Agreement or the underlying Ground Lease. Doing so shall constitute a default under this Agreement immediately. It is agreeable that Tenant will not discuss terms and conditions with any parties not directly involved with this Agreement.

23. **Bankruptcy and Insolvency**. Owner and Tenant agree that this Agreement constitutes a lease of non-residential real property for the purposes of 11 U.S.C. § 365 (d) (4) or any such successor provision.

24. **Miscellaneous**. (a) This Agreement applies to and binds the heirs, successors, executors, administrators and assigns of the parties to this Agreement; (b) This Agreement is governed by the laws of the State in which the Site is located; (c) If requested by Tenant, Owner agrees to promptly execute and deliver to Tenant a recordable Memorandum of this Agreement in the form of Exhibit C; (d) This Agreement (including the Exhibits) constitutes the entire Agreement between the parties and supersedes all prior written and verbal agreements, representations, promises or understandings between the parties, particularly related but not limited to Tenant's equipment rights on the tower and/or at the Site. Any amendments to this Agreement must be in writing and executed by both parties; (e) If any provision of this Agreement is invalid or unenforceable with respect to any party, the remainder of this Agreement or the application of such provision to persons other than those as to whom it is held invalid or unenforceable, will not be affected and each provision of this Agreement will be valid and enforceable to the fullest extent permitted by law; (f) The prevailing party in any action or proceeding in court or mutually agreed upon arbitration proceeding to enforce the terms of this Agreement is entitled to receive its reasonable attorneys' fees and other reasonable enforcement costs and expenses from the non-prevailing party; (g) Failure or delay on the part of Tenant or Owner to exercise any right, power, or privilege hereunder will not operate as a waiver thereof; waiver of a breach of any provision hereof under any circumstances will not constitute a waiver of any subsequent breach of the provision, or of a breach of any other provision of this Agreement; and (h) Tenant agrees and acknowledges that, in conjunction with other broadcast entities which may transmit from the Site, if necessary due to FCC RF emission standards and upon reasonable notice, Tenant shall reduce power or terminate station operations to prevent possible overexposure of worker to RF radiation.

The following Exhibits are attached to and made a part of this Agreement: Exhibit "A" (Site Description), "B" (Antenna and Equipment List), "C" (Memorandum of Antenna Site Agreement) and "D" (Minimum Installation, Occupancy...).

TENANT:

_____

By: _____
Title: _____
Date: _____

Fed Tax ID: _____
Address: _____
_____

Witness:_____

Witness:_____

TENANT NOTARY BLOCK:

STATE OF _____ COUNTY OF _____

The foregoing instrument was acknowledged before me this _____ day of _____, 2010, by _____, a representative of _____, a _____ corporation who is personally known to me or produced _____ as identification.

NOTARIAL SEAL

_____
(OFFICIAL NOTARY SIGNATURE)
NOTARY PUBLIC—STATE OF _____

My commission expires:
_____

_____
(NAME OF NOTARY)
COMMISSION NUMBER: _____

OWNER: SBA TOWERS, LLC, a Florida limited liability company

_____

By: Jason Silberstein
Title: Executive Vice President, Site Leasing
Date: _____

Fed Tax ID: 65-0754577
Address: 8051 Congress Avenue
2nd Floor
Boca Raton, FL 33487-1307

Witness:_____

Witness:_____

OWNER NOTARY BLOCK:

STATE OF FLORIDA COUNTY OF PALM BEACH

The foregoing instrument was acknowledged before me this _____ day of _____, 2010, by Jason Silberstein, Executive Vice President, Site Leasing of **SBA Towers, LLC,** a Florida limited liability company who is personally known to me.

NOTARIAL SEAL

_____
(OFFICIAL NOTARY SIGNATURE)
NOTARY PUBLIC—STATE OF FLORIDA

My commission expires:
_____

_____
(NAME OF NOTARY)
COMMISSION NUMBER: _____

EXHIBIT A
SITE DESCRIPTION

Site located at: _____, situated in the City of _____, County of _____, State of _____

Legal Description: See attached Exhibit A-1

Latitude: ° ' " Longitude: -° ' "

EXHIBIT B
ANTENNA AND EQUIPMENT LIST

Antenna(s):
- Quantity:
- Type:
- Manufacturer:
- Model:
- Dimensions:
- Weight:
- Mounting:
  - Base of the antenna: At approximately the _____' height level
  - Centerline of the antenna: At approximately the _____' height level
  - Tip of the antenna: At approximately the _____' height level
  - Orientation: ___°, ___° & ___°
  - Downtilt: ___°
  - Mount Type:
  - Cable:
    - Number of Lines:
    - Type:
    - Size:

Dish:
- Quantity
- Manufacturer:
- Model:
- Dimensions / Weight:
- Orientation:
- Mount: At approximately ____' height level.
- Type Mount:
- Cable Type / Size:

Tower Mounted Amplifier:
- Quantity:
- Manufacturer:
- Model:
- Dimensions:
- Mount Location:
- Cable/Mount:

Ground Space Requirements:
- Tenant provided Shelter:
  - Dimensions:
  - Type Shelter:
- Existing Shelter Space:
  - Dimensions Needed:

GPS Receiver:
- Quantity:
- Manufacturer:
- Model:
- Dimensions:
- Mount Location:
- Cable/Mount:

Transmitter:
- Quantity:
- Manufacturer:
- Model:

Power Output (Watts):

Transmitter Cabinet:

Quantity:
Manufacturer:
Model:
Dimensions:
Weight:

Frequencies:

Transmit: MHz
Receive: MHz

ERP:

Transmitter Operating Power:

Generator:

EXHIBIT C

MEMORANDUM OF ANTENNA SITE AGREEMENT

NOT FOR EXECUTION

After recording return to:

STATE OF

COUNTY OF

MEMORANDUM OF ANTENNA SITE AGREEMENT

This memorandum evidences that a lease was made and entered into by written ANTENNA SITE AGREEMENT dated _____, 2010, between **SBA TOWERS, LLC,** a Florida limited liability company "Owner" and _____ "Tenant", the terms and conditions of which are incorporated herein by reference.

Such Agreement provides in part that Owner leases to Tenant a ground space area which is described in Exhibit A attached hereto consisting of approximately ___ ( ) square feet at that certain site "Site" located at ___, City of _____, County of ____, State of _____, within the property of or under the control of Owner, with grant of easement for unrestricted rights of access thereto and to electric and telephone facilities for a term of five (5) years commencing on _____, 2010, which term is subject to four (4) additional five (5) year extension periods by Tenant.

IN WITNESS WHEREOF, the parties have executed this Memorandum as of the day and year first above written.

TENANT:

_____
By:
Title:
Tax No:
Address:

Date:_____

Witness:_____

Print Name:_____

Witness:_____

Print
Name:_____

MEMORANDUM OF ANTENNA SITE AGREEMENT CONTINUED

TENANT NOTARY BLOCK:

STATE OF _____ COUNTY OF _____

The foregoing instrument was acknowledged before me this _____ day of _____, 2010, by _____, a representative of _____, a _____ corporation, who is personally known to me or produced _____ as identification.

NOTARIAL SEAL

_____
(OFFICIAL NOTARY SIGNATURE)
NOTARY PUBLIC—STATE OF _____

My commission expires:
_____

_____
(NAME OF NOTARY)
COMMISSION NUMBER: _____

OWNER: **SBA TOWERS, LLC,** a Florida limited liability company

_____
By: Jason Silberstein
Title: Executive Vice President, Site Leasing

Tax No: 65-0754577
Address: 8051 Congress Avenue
2nd Floor
Boca Raton, FL 33487-1307

Date:_____

Witness:_____

Print
Name:_____

Witness:_____

Print
Name:_____

OWNER NOTARY BLOCK:

STATE OF FLORIDA COUNTY OF PALM BEACH

The foregoing instrument was acknowledged before me this ____ day of _____, 2010, by Jason Silberstein, Executive Vice President, Site Leasing of **SBA Towers, LLC,** a Florida limited liability company, who is personally known to me.

_____
NOTARY PUBLIC - STATE OF FLORIDA

My commission expires:

_____
Printed Name of Notary

EXHIBIT D
MINIMUM SITE INSTALLATION, OCCUPANCY AND MAINTENANCE REQUIREMENTS AND SPECIFICATIONS

Pre-Installation Standards

1. **Prior to installation**, Tenant must provide Owner with complete plans for approval, including list of proposed Equipment and subcontractors. No work may be performed until approval has been given and all criteria have been met. All Equipment must be placed in approved locations only, and Owner must approve any changes before the installation begins. The Owner or its representative shall have the right to be on site during any work on the Site. Owner to provide price quote for installation services based on Tenant's scope of work.

Installation

2. (a) The following minimum protective devices must be properly installed:
   (1) Lightning arrestors in feedline at wall feedthru ports (SBA multi-tenant buildings). (PCS providers install jumpers to extend/connect to cabinet like enclosures).
   (2) Surge protectors in any AC & phone line circuit.
   (3) Transmitter RF shielding. (Must be in place during operation)
   (4) Isolator/harmonic filter. (Must be in place during operation)
   (5) Duplexer or cavity bandpass filter. (Must be in place during operation)

   (b) All Equipment, including transmitters, duplexers, isolators and multicouplers, must be housed in a metal cabinet or rack mounted. No control stations or inverted transmit/receive frequency pairs are allowed on repeater sites.

   (c) All transmission lines entering the shelter must be 1/2" Heliax/Wellflex or better via a wall feedthru plate and must terminate in a properly installed lightning arrestor with an ID tag on both ends of the line.

   (d) Solid outer shield cable such as Superflex or Heliax/Wellflex must be used for all intercabling outside the cabinet. Under no circumstances will the use of foil shielded or braided RF cable (e.g; RGB) be permitted outside the cabinet except for RG-6 quad shield cable installed on satellite **receive only** systems.

   (e) All antenna, power and phone cables will be routed <u>and properly supported</u> to the base station in a neat manner using routes provided for that purpose. Tenant will provide individual Transient (SAD) surge protection to each circuit used. All phone lines will have (SAD) transient surge protection installed. All wiring and installation will be by means of clamping or strapping and in no event will any members or other parts of the tower be drilled, welded, punched or otherwise mutilated or altered.

   (f) All Tenants are to obtain power from the power panel and/or AC receptacle provided for their specific use.

   (g) All outside RF equipment cabinets must be grounded to the Site ground system using #2 solid tinned wire with cadweld, silver solder connections, or 2 hole lugs with Burndy type compression fittings. All inside RF equipment cabinets must be grounded to the Site ground system using #2, or #6 green jacketed stranded wire with silver solder connections, or 2 hole lugs with Burndy type compression fittings.

   (h) All antenna lines will be electrically bonded to the tower at the antenna and at the bottom of the tower using grounding kits installed per manufacturer specifications and all antenna brackets must be pre-approved. All antenna lines entering the Site will have COAX center pin lightning protection installed within two feet from the entry port and grounded to master ground bar in the Site ground system.

   (i) All equipment cabinets will be identified with a typed label under plastic on which the Tenant's name, address, 24 hour phone number, call sign, and frequencies will be inscribed, in addition to a copy of Tenant's FCC license.

   (j) Monitor speakers will be disabled except when maintenance is being performed. All antenna lines will be tagged within 12 inches of the termination of the feeder cable at both ends, at the entrance to the building, at repeater or base station cabinet, and at the multicoupler/combiner ports.

   (k) All ferrous metals located outside of the building or on the tower will be either stainless steel or hot dipped galvanized, not plated. Painted towers will require the painting of feedlines by the Tenant, unless installed by Owner, prior to or before completion of the install. All transmission lines are to be secured with factory hoist grips every 150' and secured to the tower or cable ladder with stainless steel and/or hot dipped galvanized hardware. Plastic wraps and/or bandit type hangers will not be accepted.

General

3. Tenant must comply with any applicable instructions regarding any Site security system.

(a) Gates will remain closed at all times unless entering or exiting the premises. When leaving the shelter, ensure that all doors are locked and, if there is a security system, it is armed.

(b) Any tower elevator may be used only after receiving proper instruction on its use, signing a waiver and receiving authorization from the Owner.

(c) This Agreement does not guarantee parking space. If space is available, park only in the designated areas. Do not park so as to block any ingress or egress except as may be necessary to load or unload equipment. Parking is for temporary use while working at the Site.

(d) Do not adjust or tamper with thermostats or HVAC systems.

(e) Access to the shelter roof is restricted to authorized maintenance personnel.