Copyright 2013 National Fire Protection Association (NFPA). Licensed, by agreement, for individual use and single download via NFCSS All Access on June 6, 2013 to GATEWAY TECH COLLEGE for designated user 0171780. No other reproduction or transmission in any form permitted without written permission of NFPA. For inquires or to report unauthorized use, contact licensing@nfpa.org. This NFCSS All Access subscription expires on 12/31/2013.

NFPA® 24 Annotated Edition

Standard for the Installation of Private Fire Service Mains and Their Appurtenances

2013 Edition

Annotated by Matthew J. Klaus

Authentic Document
Customer ID
141349
NFPA®
Click To Verify

NFPA, 1 Batterymarch Park, Quincy, MA 02169-7471
An International Codes and Standards Organization

Copyright 2013 National Fire Protection Association (NFPA). Licensed, by agreement, for individual use and single download via NFCSS All Access on June 6, 2013 to GATEWAY TECH COLLEGE for designated user 0171780. No other reproduction or transmission in any form permitted without written permission of NFPA. For inquires or to report unauthorized use, contact licensing@nfpa.org. This NFCSS All Access subscription expires on 12/31/2013.

Copyright © 2012
National Fire Protection Association®
One Batterymarch Park
Quincy, Massachusetts 02169-7471

All rights reserved.

About this *Annotated Edition*

This PDF contains the complete 2013 edition of NFPA 24, *Standard for the Installation of Private Fire Service Mains and Their Appurtenances,* annotated to assist the reader's understanding of the standard's language and the intent behind it. The annotations are not part of the NFPA Standard but provide a valuable commentary reflecting the views, explanations, and insights of authors and contributors selected by the NFPA based on their knowledge of and experience with the standard.

How to Navigate Between the Text of the Standard and the Annotations

Navigate between code or standard text and annotations by using hyperlinked icons and code numbers.

- While in code or standard text, click on hyperlinked ▲ icon* to the left of the standard section to navigate to corresponding annotations.
- Click on the hyperlinked annotative standard section number 1.1 to return to previous standard section.

**Please note, only the sections featuring icons contain annotations.*

For longer blocks of annotations, it is recommended that you enable the back arrow functionality in Acrobat's page navigation menu, which will also allow you to return to the previous standard section.

How to Ensure You Have the Most Up-to-date Version of the NFPA Standard

The NFPA Standard, in the edition contained herein, is current as of the effective date designated at the time the standard was issued [2013]. This *Annotated Edition* does not, however, include errata, tentative interim amendments (TIAs), or formal interpretations (FIs) that may have been issued after the effective date. For all errata, TIAs, or FIs that may have been issued since the effective date, or for any new editions that may have superseded this edition, please visit the "Document Information pages" link for the relevant NFPA Standard located in the "Codes & Standards" section of www.nfpa.org, or subscribe to the National Fire Codes Subscription Service [www.codesonline.nfpa.org].

IMPORTANT NOTICES AND DISCLAIMERS CONCERNING NFPA® DOCUMENTS

NOTICE AND DISCLAIMER OF LIABILITY CONCERNING THE USE OF NFPA DOCUMENTS

NFPA® codes, standards, recommended practices, and guides ("NFPA Documents"), of which the document contained herein is one, are developed through a consensus standards development process approved by the American National Standards Institute. This process brings together volunteers representing varied viewpoints and interests to achieve consensus on fire and other safety issues. While the NFPA administers the process and establishes rules to promote fairness in the development of consensus, it does not independently test, evaluate, or verify the accuracy of any information or the soundness of any judgments contained in NFPA Documents.

The NFPA disclaims liability for any personal injury, property or other damages of any nature whatsoever, whether special, indirect, consequential or compensatory, directly or indirectly resulting from the publication, use of, or reliance on NFPA Documents. The NFPA also makes no guaranty or warranty as to the accuracy or completeness of any information published herein.

In issuing and making NFPA Documents available, the NFPA is not undertaking to render professional or other services for or on behalf of any person or entity. Nor is the NFPA undertaking to perform any duty owed by any person or entity to someone else. Anyone using this document should rely on his or her own independent judgment or, as appropriate, seek the

Copyright 2013 National Fire Protection Association (NFPA). Licensed, by agreement, for individual use and single download via NFCSS All Access on June 6, 2013 to GATEWAY TECH COLLEGE for designated user 0171780. No other reproduction or transmission in any form permitted without written permission of NFPA. For inquires or to report unauthorized use, contact licensing@nfpa.org. This NFCSS All Access subscription expires on 12/31/2013.

advice of a competent professional in determining the exercise of reasonable care in any given circumstances.

The NFPA has no power, nor does it undertake, to police or enforce compliance with the contents of NFPA Documents. Nor does the NFPA list, certify, test, or inspect products, designs, or installations for compliance with this document. Any certification or other statement of compliance with the requirements of this document shall not be attributable to the NFPA and is solely the responsibility of the certifier or maker of the statement.

ADDITIONAL NOTICES AND DISCLAIMERS

Updating of NFPA Documents

Users of NFPA codes, standards, recommended practices, and guides ("NFPA Documents") should be aware that these documents may be superseded at any time by the issuance of new editions or may be amended from time to time through the issuance of Tentative Interim Amendments. An official NFPA Document at any point in time consists of the current edition of the document together with any Tentative Interim Amendments and any Errata then in effect. In order to determine whether a given document is the current edition and whether it has been amended through the issuance of Tentative Interim Amendments or corrected through the issuance of Errata, consult appropriate NFPA publications such as the National Fire Codes® Subscription Service, visit the NFPA website at www.nfpa.org, or contact the NFPA at the address listed below.

Interpretations of NFPA Documents

A statement, written or oral, that is not processed in accordance with Section 6 of the Regulations Governing Committee Projects shall not be considered the official position of NFPA or any of its Committees and shall not be considered to be, nor be relied upon as, a Formal Interpretation.

Patents

The NFPA does not take any position with respect to the validity of any patent rights referenced in, related to, or asserted in connection with an NFPA Document. The users of NFPA Documents bear the sole responsibility for determining the validity of any such patent rights, as well as the risk of infringement of such rights, and the NFPA disclaims liability for the infringement of any patent resulting from the use of or reliance on NFPA Documents.

NFPA adheres to the policy of the American National Standards Institute (ANSI) regarding the inclusion of patents in American National Standards ("the ANSI Patent Policy"), and hereby gives the following notice pursuant to that policy:

> NOTICE: The user's attention is called to the possibility that compliance with an NFPA Document may require use of an invention covered by patent rights. NFPA takes no position as to the validity of any such patent rights or as to whether such patent rights constitute or include essential patent claims under the ANSI Patent Policy. If, in connection with the ANSI Patent Policy, a patent holder has filed a statement of willingness to grant licenses under these rights on reasonable and nondiscriminatory terms and conditions to applicants desiring to obtain such a license, copies of such filed statements can be obtained, on request, from NFPA. For further information, contact the NFPA at the address listed below.

Laws and Regulations

Users of NFPA Documents should consult applicable federal, state, and local laws and regulations. NFPA does not, by the publication of its codes, standards, recommended practices, and guides, intend to urge action that is not in compliance with applicable laws, and these documents may not be construed as doing so.

Copyrights

NFPA Documents are copyrighted by the NFPA. They are made available for a wide variety of both public and private uses. These include both use, by reference, in laws and regulations, and use in private self-regulation, standardization, and the promotion of safe practices and methods. By making these documents available for use and adoption by public authorities and private users, the NFPA does not waive any rights in copyright to these documents.

Use of NFPA Documents for regulatory purposes should be accomplished through adoption by reference. The term "adoption by reference" means the citing of title, edition, and pub-

Copyright 2013 National Fire Protection Association (NFPA). Licensed, by agreement, for individual use and single download via NFCSS All Access on June 6, 2013 to GATEWAY TECH COLLEGE for designated user 0171780. No other reproduction or transmission in any form permitted without written permission of NFPA. For inquires or to report unauthorized use, contact licensing@nfpa.org. This NFCSS All Access subscription expires on 12/31/2013.

lishing information only. Any deletions, additions, and changes desired by the adopting authority should be noted separately in the adopting instrument. In order to assist NFPA in following the uses made of its documents, adopting authorities are requested to notify the NFPA (Attention: Secretary, Standards Council) in writing of such use. For technical assistance and questions concerning adoption of NFPA Documents, contact NFPA at the address below.

For Further Information

Questions or other communications relating to NFPA Documents and all requests for information on NFPA procedures governing its codes and standards development process, including information on the procedures for requesting Formal Interpretations, for proposing Tentative Interim Amendments, and for proposing revisions to NFPA Documents during regular revision cycles, should be sent to NFPA headquarters, addressed to the attention of the Secretary, Standards Council, NFPA, 1 Batterymarch Park, Quincy, MA 02169-7471; email: stds_admin@nfpa.org.

For more information about NFPA, visit the NFPA website at www.nfpa.org.

IMPORTANT NOTICES AND DISCLAIMERS CONCERNING THE ANNOTATED EDITION

Notice and Disclaimer Concerning Liability

Publication of this *Annotated Edition* is for the purpose of circulating information and opinion among those concerned for fire and electrical safety and related subjects. While every effort has been made to achieve a work of high quality, neither the NFPA® nor the contributors to this *Annotated Edition* guarantee the accuracy or completeness of or assume any liability in connection with the information and opinions contained in this *Annotated Edition*. The NFPA and the contributors shall in no event be liable for any personal injury, property, or other damages of any nature whatsoever, whether special, indirect, consequential, or compensatory, directly or indirectly resulting from the publication, use of, or reliance upon this *Annotated Edition*.

This *Annotated Edition* is published with the understanding that the NFPA and the contributors to this *Annotated Edition* are supplying information and opinion but are not attempting to render engineering or other professional services. If such services are required, the assistance of an appropriate professional should be sought.

NFPA codes, standards, recommended practices, and guides ("NFPA Documents"), including the NFPA Document that is the subject of this *Annotated Edition*, are made available for use subject to Important Notices and Disclaimers Concerning NFPA Documents, which are separately bookmarked and viewable in this *Annotated Edition*, and which can also be viewed at *www.nfpa.org/disclaimers*.

Notice Concerning Interpretations Contained in the Annotations

NFPA codes, standards, recommended practices, and guides ("NFPA Documents"), including the NFPA Document that is the subject of this *Annotated Edition* are developed in accordance with the published procedures of the NFPA by technical committees comprised of volunteers drawn from a broad array of relevant interests. In this *Annotated Edition* the text of the NFPA Document is accompanied with annotations providing explanation and commentary on the meaning and intent of the Document.

The annotations contained in this *Annotated Edition* are not a part of the NFPA Document and do not constitute Formal Interpretations of the NFPA (which can be obtained only through requests processed by the responsible technical committees in accordance with the published procedures of the NFPA). The annotations, therefore, solely reflect the personal opinions of the author or other contributors and do not necessarily represent the official position of the NFPA or its technical committees.

ISBN: 978-1455906666

Copyright 2013 National Fire Protection Association (NFPA). Licensed, by agreement, for individual use and single download via NFCSS All Access on June 6, 2013 to GATEWAY TECH COLLEGE for designated user 0171780. No other reproduction or transmission in any form permitted without written permission of NFPA. For inquires or to report unauthorized use, contact licensing@nfpa.org. This NFCSS All Access subscription expires on 12/31/2013.

Copyright © 2012 National Fire Protection Association®. All Rights Reserved.

NFPA® 24

Standard for the

Installation of Private Fire Service Mains and Their Appurtenances

2013 Edition

This edition of NFPA 24, *Standard for the Installation of Private Fire Service Mains and Their Appurtenances*, was prepared by the Technical Committee on Private Water Supply Piping Systems and released by the Technical Correlating Committee Automatic Sprinkler Systems. It was issued by the Standards Council on May 29, 2012, with an effective date of June 18, 2012, and supersedes all previous editions.

This edition of NFPA 24 was approved as an American National Standard on June 18, 2012.

Origin and Development of NFPA 24

In 1903, the NFPA Committee on Hose and Hydrants first presented *Specifications for Mill Yard Hose Houses*, taken substantially from a standard published by the Eastern Factory Insurance Association. This text was revised and adopted in 1904. The NFPA Committee on Field Practice amended the Specifications in 1926, published as NFPA 25.

In 1925, the Committee on Field Practice prepared a *Standard on Outside Protection, Private Underground Piping Systems Supplying Water for Fire Extinguishment*, which was adopted by NFPA. It was largely taken from the 1920 edition of the NFPA *Automatic Sprinkler Standard*, Section M on Underground Pipes and Fittings. In September 1931, a revision was made, with the resulting standard designated as NFPA 24. In the 1981 edition the title was changed from *Standard for Outside Protection* to *Standard for the Installation of Private Fire Service Mains and Their Appurtenances*.

In 1953, on recommendation of the Committee on Standpipes and Outside Protection, the two standards (NFPA 24 and NFPA 25) were completely revised and adopted as NFPA 24. Amendments were made leading to separate editions in 1955, 1959, 1962, 1963, 1965, 1966, 1968, 1969, 1970, 1973, 1977, 1981, 1983, and 1987.

The 1992 edition included amendments to further delineate the point at which the water supply stops and the fixed fire protection system begins. Minor changes were made concerning special topics such as thrust restraint and equipment provisions in valve pits.

The 1995 edition clarified requirements for aboveground and buried piping. Revisions were made to provide additional information regarding listing requirements, signage, valves, valve supervision, hydrant outlets, system attachments, piping materials, and thrust blocks. User friendliness of the document was also addressed.

The 2002 edition represented a complete revision of NFPA 24. Changes included reorganization and editorial modifications to comply with the *Manual of Style for NFPA Technical Committee Documents*. Additionally, all of the underground piping requirements were relocated into a new Chapter 10.

The 2007 edition was revised in five major areas: Chapter 10 was editorially updated and minor technical changes were made. In addition, newly established leakage test criteria, as well as updated requirements for thrust blocks and restrained joints were added to Chapter 10. Two annexes were new to this edition: Annex C, *Recommended Practice for Fire Flow Testing*, and Annex D, *Recommended Practice for Marking of Hydrants*. These two annexes were developed based on the 2002 edition of NFPA 291.

The 2010 edition was revised in three major areas: the provisions for location and identification of fire department connections, valves controlling water supply, and protection of fire service mains entering the building.

The 2013 edition of NFPA 24 includes clarifications on the requirements for running piping under buildings, including annex figures depicting clearances. The Contractors Material and Test Certificate for Underground Piping *(Figure 10.10.1)* was modified to include confirmation that the forward flow test of the backflow preventer has been conducted. A provision requiring the automatic drip valve to be located in an accessible location that permits inspections in accordance with NFPA 25 was also added.

NFPA and National Fire Protection Association are registered trademarks of the National Fire Protection Association, Quincy, Massachusetts 02169.

Copyright 2013 National Fire Protection Association (NFPA). Licensed, by agreement, for individual use and single download via NFCSS All Access on June 6, 2013 to GATEWAY TECH COLLEGE for designated user 0171780. No other reproduction or transmission in any form permitted without written permission of NFPA. For inquires or to report unauthorized use, contact licensing@nfpa.org. This NFCSS All Access subscription expires on 12/31/2013.

Technical Correlating Committee on Automatic Sprinkler Systems

Edward K. Budnick, *Chair*
Hughes Associates, Inc. MD [SE]

Jose R. Baz, JRB Associates Group Inc., FL [M]
Rep. NFPA Latin American Section
Kerry M. Bell, Underwriters Laboratories Inc., IL [RT]
Russell P. Fleming, National Fire Sprinkler Association, Inc., NY [M]
Scott T. Franson, The Viking Corporation, MI [M]
Michael J. Friedman, Friedman Consulting, Inc., MD [SE]
Raymond A. Grill, Arup Fire, DC [SE]
Luke Hilton, Liberty Mutual Property, NC [I]
Alex Hoffman, Viking Fire Protection Inc., Canada [IM]
Rep. Canadian Automatic Sprinkler Association
Roland J. Huggins, American Fire Sprinkler Association, Inc., TX [IM]
Sultan M. Javeri, SC Engineering, France [IM]
Charles W. Ketner, National Automatic Sprinkler Fitters LU 669, MD [L]
Rep. United Association of Journeymen and Apprentices of the Plumbing and Pipe Fitting Industry
Andrew Kim, National Research Council of Canada, Canada [RT]
Russell B. Leavitt, Telgian Corporation, AZ [U]
Rep. Trinity Health
John G. O'Neill, The Protection Engineering Group, PC, VA [SE]
Garner A. Palenske, Aon/Schirmer Engineering Corporation, CA [I]
J. William Sheppard, Sheppard & Associates, LLC, MI [SE]
Robert D. Spaulding, FM Global, MA [I]
Douglas Paul Stultz, U.S. Department of the Navy, VA [E]
Lynn K. Underwood, Axis U.S. Property, IL [I]

Alternates

Donald D. Becker, RJC & Associates, Inc., MO [IM]
(Alt. to R. J. Huggins)
Thomas C. Brown, The RJA Group, Inc., MD [SE]
(Alt. to R. A. Grill)
David B. Fuller, FM Global, MA [I]
(Alt. to R. D. Spaulding)
Kenneth E. Isman, National Fire Sprinkler Association, Inc., NY [M]
(Alt. to R. P. Fleming)
George E. Laverick, Underwriters Laboratories Inc., IL [RT]
(Alt. to K. M. Bell)
Scott T. Martorano, The Viking Corporation, MI [M]
(Alt. to S. T. Franson)
Donato A. Pirro, Electro Sistemas De Panama, S.A., Panama [M]
(Alt. to J. R. Baz)
J. Michael Thompson, The Protection Engineering Group, PC, VA [SE]
(Alt. to J. G. O'Neill)

Nonvoting

James B. Biggins, Global Risk Consultants Corporation, IL [SE]
Rep. TC on Hanging and Bracing of Water-Based Systems
Robert M. Gagnon, Gagnon Engineering, MD [SE]
Rep. TC on Foam-Water Sprinklers
William E. Koffel, Koffel Associates, Inc., MD [SE]
Rep. Safety to Life Technical Correlating Committee
Kenneth W. Linder, Swiss Re, CT [I]
Rep. TC on Sprinkler System Discharge Criteria
Joe W. Noble, Noble Consulting Services, LLC, NV [E]
Rep. TC on Sprinkler System Installation Criteria
Maurice M. Pilette, Mechanical Designs Ltd., MA [SE]
Rep. TC on Residential Sprinkler Systems
Chester W. Schirmer, Aon/Schirmer Engineering Corporation, NC [I]
(Member Emeritus)
Kenneth W. Wagoner, Parsley Consulting Engineers, CA [SE]
Rep. TC on Private Water Supply Piping Systems
John J. Walsh, UA Joint Apprenticeship Committee, MD [SE]
Rep. United Association of Journeymen and Apprentices of the Plumbing and Pipe Fitting Industry
(Member Emeritus)

Matthew J. Klaus, NFPA Staff Liaison

This list represents the membership at the time the Committee was balloted on the final text of this edition. Since that time, changes in the membership may have occurred. A key to classifications is found at the back of the document.

NOTE: Membership on a committee shall not in and of itself constitute an endorsement of the Association or any document developed by the committee on which the member serves.

Committee Scope: This Committee shall have overall responsibility for documents that pertain to the criteria for the design and installation of automatic, open and foam-water sprinkler systems including the character and adequacy of water supplies, and the selection of sprinklers, piping, valves, and all materials and accessories. This Committee does not cover the installation of tanks and towers, nor the installation, maintenance, and use of central station, proprietary, auxiliary, and local signaling systems for watchmen, fire alarm, supervisory service, nor the design of fire department hose connections.

Copyright 2013 National Fire Protection Association (NFPA). Licensed, by agreement, for individual use and single download via NFCSS All Access on June 6, 2013 to GATEWAY TECH COLLEGE for designated user 0171780. No other reproduction or transmission in any form permitted without written permission of NFPA. For inquires or to report unauthorized use, contact licensing@nfpa.org. This NFCSS All Access subscription expires on 12/31/2013.

Technical Committee on Private Water Supply Piping Systems

Kenneth W. Wagoner, *Chair*
Parsley Consulting Engineers, CA [SE]

Richard W. Bonds, Ductile Iron Pipe Research Association, AL [M]
Phillip A. Brown, American Fire Sprinkler Association, Inc., TX [IM]
James A. Charrette, Allan Automatic Sprinkler Corporation of Southern California, CA [IM]
Rep. National Fire Sprinkler Association
Flora F. Chen, City of Hayward, CA [E]
Stephen A. Clark, Jr., Allianz Risk Consultants, LLC, GA [I]
Jeffry T. Dudley, National Aeronautics and Space Administration, FL [U]
Byron E. Ellis, Entergy Corporation, LA [U]
Rep. Edison Electric Institute
Brandon W. Frakes, XL Global Asset Protection Services, NC [I]
David B. Fuller, FM Global, MA [I]
Robert M. Gagnon, Gagnon Engineering, MD [SE]
Tanya M. Glumac, Liberty Mutual Property, MA [I]
William J. Gotto, Global Risk Consultants Corporation, NJ [SE]
LaMar Hayward, 3-D Fire Protection, Inc., ID [IM]
Alan R. Laguna, Merit Sprinkler Company, Inc., LA [IM]
John Lake, City of Gainesville, FL [E]
Michael T. Larabel, Amway Inc., MI [U]
George E. Laverick, Underwriters Laboratories Inc., IL [RT]
James M. Maddry, James M. Maddry, P.E., GA [SE]
Kevin D. Maughan, Tyco Fire Protection Products, RI [M]
Bob D. Morgan, Fort Worth Fire Department, TX [E]
David S. Mowrer, Babcock & Wilcox Technical Services, LLC, TN [U]
Dale H. O'Dell, National Automatic Sprinkler Fitters LU 669, CA [L]
Rep. United Association of Journeymen and Apprentices of the Plumbing and Pipe Fitting Industry
Adam P. Olomon, Aon/RRS/Schirmer Engineering, TX [I]
Sam P. Salwan, Environmental Systems Design, Inc., IL [SE]
James R. Schifiliti, Fire Safety Consultants, Inc., IL [IM]
Rep. Illinois Fire Prevention Association
Peter T. Schwab, Wayne Automatic Fire Sprinklers, Inc., FL [IM]
J. William Sheppard, Sheppard & Associates, LLC, MI [SE]
Scott M. Twele, The RJA Group, Inc., CA [SE]
Karl Wiegand, National Fire Sprinkler Association, NY [M]

Alternates

James B. Biggins, Global Risk Consultants Corporation, IL [SE]
(Alt. to W. J. Gotto)
Mark A. Bowman, XL Global Asset Protection Services, OH [I]
(Alt. to B. W. Frakes)
Joshua Davis, The RJA Group, Inc., GA [SE]
(Alt. to S. M. Twele)
Steve L. Escue, TK Engineering Company, TN [M]
(Alt. to K. Wiegand)
Cliff Hartford, Tyco Fire & Building Products, NY [M]
(Alt. to K. D. Maughan)
Andrew C. Higgins, Allianz Risk Consultants, LLC, GA [I]
(Alt. to S. A. Clark, Jr.)
Luke Hilton, Liberty Mutual Property, NC [I]
(Alt. to T. M. Glumac)
Charles W. Ketner, National Automatic Sprinkler Fitters LU 669, MD [L]
(Alt. to D. H. O'Dell)
Michael G. McCormick, Underwriters Laboratories Inc., IL [RT]
(Alt. to G. E. Laverick)
Martin Ramos, Environmental Systems Design, Inc., IL [SE]
(Alt. to S. P. Salwan)
Jeffrey J. Rovegno, Mr. Sprinkler Fire Protection, CA [IM]
(Alt. to P. A. Brown)
Austin L. Smith, Babcock & Wilcox Y-12, LLC, TN [U]
(Alt. to D. S. Mowrer)
Ronald N. Webb, S.A. Comunale Company, Inc., OH [IM]
(Alt. to J. A. Charrette)

Matthew J. Klaus, NFPA Staff Liaison

This list represents the membership at the time the Committee was balloted on the final text of this edition. Since that time, changes in the membership may have occurred. A key to classifications is found at the back of the document.

NOTE: Membership on a committee shall not in and of itself constitute an endorsement of the Association or any document developed by the committee on which the member serves.

Committee Scope: This Committee shall have the primary responsibility for documents on private piping systems supplying water for fire protection and for hydrants, hose houses, and valves. The Committee is also responsible for documents on fire flow testing and marking of hydrants.

Copyright 2013 National Fire Protection Association (NFPA). Licensed, by agreement, for individual use and single download via NFCSS All Access on June 6, 2013 to GATEWAY TECH COLLEGE for designated user 0171780. No other reproduction or transmission in any form permitted without written permission of NFPA. For inquires or to report unauthorized use, contact licensing@nfpa.org. This NFCSS All Access subscription expires on 12/31/2013.

Contents

Chapter 1 Administration 24– 5
1.1 Scope 24– 5
1.2 Purpose 24– 5
1.3 Retroactivity 24– 5
1.4 Equivalency 24– 5
1.5 Units 24– 5

Chapter 2 Referenced Publications 24– 6
2.1 General 24– 6
2.2 NFPA Publications 24– 6
2.3 Other Publications 24– 6
2.4 References for Extracts in Mandatory Sections 24– 7

Chapter 3 Definitions 24– 7
3.1 General 24– 7
3.2 NFPA Official Definitions 24– 7
3.3 General Definitions 24– 7
3.4 Hydrant Definitions 24– 8

Chapter 4 General Requirements 24– 8
4.1 Plans 24– 8
4.2 Installation Work 24– 8

Chapter 5 Water Supplies 24– 8
5.1 Connection to Waterworks Systems 24– 8
5.2 Size of Fire Mains 24– 9
5.3 Pressure-Regulating Devices and Meters 24– 9
5.4 Connection from Waterworks Systems 24– 9
5.5 Connections to Public Water Systems 24– 9
5.6 Pumps 24– 9
5.7 Tanks 24– 9
5.8 Penstocks, Flumes, Rivers, Lakes, or Reservoirs 24– 9
5.9 Fire Department Connections 24– 9

Chapter 6 Valves 24– 9
6.1 Types of Valves 24– 9
6.2 Valves Controlling Water Supplies 24–10
6.3 Post Indicator Valves 24–10
6.4 Valves in Pits 24–10
6.5 Backflow Prevention Assemblies 24–11
6.6 Sectional Valves 24–11
6.7 Identifying and Securing Valves 24–11
6.8 Check Valves 24–11

Chapter 7 Hydrants 24–11
7.1 General 24–11
7.2 Number and Location 24–11
7.3 Installation 24–11

Chapter 8 Hose Houses and Equipment 24–12
8.1 General 24–12
8.2 Location 24–12
8.3 Construction 24–12
8.4 Size and Arrangement 24–12
8.5 Marking 24–12
8.6 General Equipment 24–12
8.7 Domestic Service Use Prohibited 24–12

Chapter 9 Master Streams 24–12
9.1 Master Streams 24–12
9.2 Application and Special Considerations 24–12

Chapter 10 Underground Piping 24–12
10.1 Piping Materials 24–12
10.2 Fittings 24–13
10.3 Joining of Pipe and Fittings 24–13
10.4 Depth of Cover 24–14
10.5 Protection Against Freezing 24–14
10.6 Protection Against Damage 24–14
10.7 Requirement for Laying Pipe 24–15
10.8 Joint Restraint 24–15
10.9 Backfilling 24–16
10.10 Testing and Acceptance 24–17

Chapter 11 Hydraulic Calculations 24–20
11.1 Calculations in U.S. Customary Units 24–20
11.2 Calculations in SI Units 24–20

Chapter 12 Aboveground Pipe and Fittings 24–20
12.1 General 24–20
12.2 Protection of Piping 24–20

Chapter 13 Sizes of Aboveground and Buried Pipe 24–20
13.1 Private Service Mains 24–20
13.2 Mains Not Supplying Hydrants 24–20
13.3 Mains Supplying Fire Protection Systems 24–21

Chapter 14 System Inspection, Testing, and Maintenance 24–21
14.1 General 24–21

Annex A Explanatory Material 24–21

Annex B Valve Supervision Issues 24–36

Annex C Recommended Practice for Fire Flow Testing 24–37

Annex D Recommended Practice for Marking of Hydrants 24–47

Annex E Informational References 24–48

Index 24–50

Copyright 2013 National Fire Protection Association (NFPA). Licensed, by agreement, for individual use and single download via NFCSS All Access on June 6, 2013 to GATEWAY TECH COLLEGE for designated user 0171780. No other reproduction or transmission in any form permitted without written permission of NFPA. For inquires or to report unauthorized use, contact licensing@nfpa.org. This NFCSS All Access subscription expires on 12/31/2013.

NFPA 24

Standard for the

Installation of Private Fire Service Mains and Their Appurtenances

2013 Edition

IMPORTANT NOTE: This NFPA document is made available for use subject to important notices and legal disclaimers. These notices and disclaimers appear in all publications containing this document and may be found under the heading "Important Notices and Disclaimers Concerning NFPA Documents." They can also be obtained on request from NFPA or viewed at www.nfpa.org/disclaimers.

NOTICE: An asterisk (*) following the number or letter designating a paragraph indicates that explanatory material on the paragraph can be found in Annex A.

Changes other than editorial are indicated by a vertical rule beside the paragraph, table, or figure in which the change occurred. These rules are included as an aid to the user in identifying changes from the previous edition. Where one or more complete paragraphs have been deleted, the deletion is indicated by a bullet (•) between the paragraphs that remain.

A reference in brackets [ ] following a section or paragraph indicates material that has been extracted from another NFPA document. As an aid to the user, the complete title and edition of the source documents for extracts in mandatory sections of the document are given in Chapter 2 and those for extracts in informational sections are given in Annex E. Extracted text may be edited for consistency and style and may include the revision of internal paragraph references and other references as appropriate. Requests for interpretations or revisions of extracted text shall be sent to the technical committee responsible for the source document.

Information on referenced publications can be found in Chapter 2 and Annex E.

▲ Chapter 1 Administration

1.1 Scope.

1.1.1 This standard shall cover the minimum requirements for the installation of private fire service mains and their appurtenances supplying the following:

(1) Automatic sprinkler systems
(2) Open sprinkler systems
(3) Water spray fixed systems
(4) Foam systems
(5) Private hydrants
(6) Monitor nozzles or standpipe systems with reference to water supplies
▲ (7) Hose houses

1.1.2 This standard shall apply to combined service mains used to carry water for fire service and other uses.

1.1.3 This standard shall not apply to the following situations:

(1) Mains under the control of a water utility
(2) Mains providing fire protection and/or domestic water that are privately owned but are operated as a water utility

1.1.4 This standard shall not apply to underground mains serving sprinkler systems designed and installed in accordance with NFPA 13R that are under 4 in. (102 mm) in size.

▲ **1.1.5** This standard shall not apply to underground mains serving sprinkler systems designed and installed in accordance with NFPA 13D.

▲ **1.2 Purpose.** The purpose of this standard shall be to provide a reasonable degree of protection for life and property from fire through installation requirements for private fire service main systems based on sound engineering principles, test data, and field experience.

▲ **1.3 Retroactivity.** The provisions of this standard reflect a consensus of what is necessary to provide an acceptable degree of protection from the hazards addressed in this standard at the time the standard was issued.

1.3.1 Unless otherwise specified, the provisions of this standard shall not apply to facilities, equipment, structures, or installations that existed or were approved for construction or installation prior to the effective date of the standard. Where specified, the provisions of this standard shall be retroactive.

1.3.2 In those cases where the authority having jurisdiction determines that the existing situation presents an unacceptable degree of risk, the authority having jurisdiction shall be permitted to apply retroactively any portions of this standard deemed appropriate.

1.3.3 The retroactive requirements of this standard shall be permitted to be modified if their application clearly would be impractical in the judgment of the authority having jurisdiction and only where it is clearly evident that a reasonable degree of safety is provided.

▲ **1.4 Equivalency.** Nothing in this standard is intended to prevent the use of systems, methods, or devices of equivalent or superior quality, strength, fire resistance, effectiveness, durability, and safety over those prescribed by this standard. Technical documentation shall be submitted to the authority having jurisdiction to demonstrate equivalency. The system, method, or device shall be approved for the intended purpose by the authority having jurisdiction.

1.5 Units.

1.5.1 Metric units of measurement in this standard shall be in accordance with the modernized metric system known as the International System of Units (SI). Liter and bar units are not part of, but are recognized by, SI and are commonly used in international fire protection. These units are shown in Table 1.5.1 with conversion factors.

Table 1.5.1 Conversion Table for SI Units

Name of Unit	Unit Symbol	Conversion Factor
Liter	L	1 gal = 3.785 L
Liter per minute per square meter	$(L/min)/m^2$	1 gpm/ft^2 = (40.746 $L/min)/m^2$
Cubic decimeter	dm^3	1 gal = 3.785 dm^3
Pascal	Pa	1 psi = 6894.757 Pa
Bar	bar	1 psi = 0.0689 bar
Bar	bar	1 bar = 10^5 Pa

Note: For additional conversions and information, see IEEE/ASTM-SI-10.

Copyright 2013 National Fire Protection Association (NFPA). Licensed, by agreement, for individual use and single download via NFCSS All Access on June 6, 2013 to GATEWAY TECH COLLEGE for designated user 0171780. No other reproduction or transmission in any form permitted without written permission of NFPA. For inquires or to report unauthorized use, contact licensing@nfpa.org. This NFCSS All Access subscription expires on 12/31/2013.

1.5.2 If a value for measurement as given in this standard is followed by an equivalent value in other units, the first stated is to be regarded as the requirement. A given equivalent value might be approximate.

1.5.3 SI units have been converted by multiplying the quantity by the conversion factor and then rounding the result to the appropriate number of significant digits.

▲ Chapter 2 Referenced Publications

2.1 General. The documents or portions thereof listed in this chapter are referenced within this standard and shall be considered part of the requirements of this document.

2.2 NFPA Publications. National Fire Protection Association, 1 Batterymarch Park, Quincy, MA 02169-7471.

NFPA 13, *Standard for the Installation of Sprinkler Systems,* 2013 edition.

NFPA 13D, *Standard for the Installation of Sprinkler Systems in One- and Two-Family Dwellings and Manufactured Homes,* 2013 edition.

NFPA 13R, *Standard for the Installation of Sprinkler Systems in Low-Rise Residential Occupancies,* 2013 edition.

NFPA 20, *Standard for the Installation of Stationary Pumps for Fire Protection,* 2013 edition.

NFPA 22, *Standard for Water Tanks for Private Fire Protection,* 2008 edition.

NFPA 25, *Standard for the Inspection, Testing, and Maintenance of Water-Based Fire Protection Systems,* 2011 edition.

NFPA 780, *Standard for the Installation of Lightning Protection Systems,* 2011 edition.

NFPA 1961, *Standard on Fire Hose,* 2013 edition.

NFPA 1963, *Standard for Fire Hose Connections,* 2009 edition.

2.3 Other Publications.

2.3.1 ASME Publications. American Society of Mechanical Engineers, Three Park Avenue, New York, NY 10016-5990.

ASME B1.20.1, *Pipe Threads, General Purpose (Inch)*, 2001.

ASME B16.1, *Gray Iron Pipe Flanges and Flanged Fittings, Classes 25, 125, and 250*, 2005.

ASME B16.3, *Malleable Iron Threaded Fittings, Classes 150 and 300*, 2006.

ASME B16.4, *Gray Iron Threaded Fittings, Classes 125 and 250*, 2006.

ASME B16.5, *Pipe Flanges and Flanged Fittings NPS ½ through 24*, 2003.

ASME B16.9, *Factory-Made Wrought Steel Buttweld Fittings*, 2007.

ASME B16.11, *Forged Steel Fittings, Socket Welded and Threaded*, 2005.

ASME B16.18, *Cast Bronze Solder Joint Pressure Fittings*, 2001.

ASME B16.22, *Wrought Copper and Bronze Solder Joint Pressure Fittings*, 2001.

ASME B16.25, *Buttwelding Ends*, 2007.

2.3.2 ASTM Publications. ASTM International, 100 Barr Harbor Drive, P.O. Box C700, West Conshohocken, PA 19428-2959.

ASTM A 234, *Specification for Piping Fittings of Wrought Carbon Steel and Alloy Steel for Moderate and Elevated Temperatures*, 2007.

ASTM B 75, *Specification for Seamless Copper Tube*, 2002.

ASTM B 88, *Specification for Seamless Copper Water Tube*, 2003.

ASTM B 251, *Requirements for Wrought Seamless Copper and Copper-Alloy Tube*, 2002.

ASTM F 437, *Chlorinated Polyvinyl Chloride (CPVC) Specification for Schedule 80 CPVC Threaded Fittings*, 2006.

ASTM F 438, *Specification for Schedule 40 CPVC Socket-Type Fittings*, 2004.

ASTM F 439, *Specification for Schedule 80 CPVC Socket-Type Fittings*, 2006.

IEEE/ASTM-SI-10, *Standard for Use of the International System of Units (SI): The Modern Metric System*, 2002.

2.3.3 AWWA Publications. American Water Works Association, 6666 West Quincy Avenue, Denver, CO 80235.

AWWA C104, *Cement Mortar Lining for Ductile Iron Pipe and Fittings for Water*, 2008.

AWWA C105, *Polyethylene Encasement for Ductile Iron Pipe Systems*, 2005.

AWWA C110, *Ductile Iron and Gray Iron Fittings*, 2008.

AWWA C111, *Rubber-Gasket Joints for Ductile Iron Pressure Pipe and Fittings*, 2000.

AWWA C115, *Flanged Ductile Iron Pipe with Ductile Iron or Gray Iron Threaded Flanges*, 2005.

AWWA C116, *Protective Fusion-Bonded Epoxy Coatings for the Interior and Exterior Surfaces of Ductile-Iron and Gray-Iron Fittings for Water Supply Service*, 2003.

AWWA C150, *Thickness Design of Ductile Iron Pipe*, 2008.

AWWA C151, *Ductile Iron Pipe, Centrifugally Cast for Water*, 2002.

AWWA C153, *Ductile-Iron Compact Fittings for Water Service*, 2006.

AWWA C200, *Steel Water Pipe 6 in. and Larger*, 2005.

AWWA C203, *Coal-Tar Protective Coatings and Linings for Steel Water Pipelines Enamel and Tape — Hot Applied*, 2002.

AWWA C205, *Cement-Mortar Protective Lining and Coating for Steel Water Pipe 4 in. and Larger — Shop Applied*, 2007.

AWWA C206, *Field Welding of Steel Water Pipe*, 2003.

AWWA C207, *Steel Pipe Flanges for Waterworks Service — Sizes 4 in. Through 144 in.*, 2007.

AWWA C208, *Dimensions for Fabricated Steel Water Pipe Fittings*, 2007.

AWWA C300, *Reinforced Concrete Pressure Pipe, Steel-Cylinder Type*, 2004.

AWWA C301, *Prestressed Concrete Pressure Pipe, Steel-Cylinder Type*, 2007.

AWWA C302, *Reinforced Concrete Pressure Pipe, Non-Cylinder Type*, 2004.

AWWA C303, *Reinforced Concrete Pressure Pipe, Steel-Cylinder Type, Pretensioned*, 2002.

AWWA C400, *Standard for Asbestos-Cement Distribution Pipe, 4 in. Through 16 in. (100 mm through 400 mm), for Water Distribution Systems*, 2003.

Copyright 2013 National Fire Protection Association (NFPA). Licensed, by agreement, for individual use and single download via NFCSS All Access on June 6, 2013 to GATEWAY TECH COLLEGE for designated user 0171780. No other reproduction or transmission in any form permitted without written permission of NFPA. For inquires or to report unauthorized use, contact licensing@nfpa.org. This NFCSS All Access subscription expires on 12/31/2013.

AWWA C401, *Standard for the Selection of Asbestos-Cement Pressure Pipe 4 in. through 16 in. (100 mm through 400 mm)*, 2003.

AWWA C600, *Standard for the Installation of Ductile Iron Water Mains and Their Appurtenances*, 2005.

AWWA C602, *Cement-Mortar Lining of Water Pipe Lines 4 in. and Larger — in Place*, 2006.

AWWA C603, *Standard for the Installation of Asbestos-Cement Pressure Pipe*, 2005.

AWWA C900, *Polyvinyl Chloride (PVC) Pressure Pipe, 4 in. Through 12 in., for Water Distribution*, 2007.

AWWA C905, *AWWA Standard for Polyvinyl Chloride (PVC) Pressure Pipe and Fabricated Fittings, 14 in. Through 48 in. (350 mm Through 1,200 mm)*, 2010.

AWWA C906, *Polyethylene (PE) Pressure Pipe and Fittings, 4 in. (100 mm) Through 63 in. (1575 mm) for Water Distribution*, 2007.

AWWA M11, *A Guide for Steel Pipe Design and Installation*, 4th edition, 2004.

2.3.4 Other Publications.

Merriam-Webster's Collegiate Dictionary, 11th edition, Merriam-Webster, Inc., Springfield, MA, 2003.

2.4 References for Extracts in Mandatory Sections.

NFPA 20, *Standard for the Installation of Stationary Pumps for Fire Protection*, 2013 edition.

Chapter 3 Definitions

3.1 General. The definitions contained in this chapter shall apply to the terms used in this standard. Where terms are not defined in this chapter or within another chapter, they shall be defined using their ordinarily accepted meanings within the context in which they are used. *Merriam-Webster's Collegiate Dictionary*, 11th edition, shall be the source for the ordinarily accepted meaning.

3.2 NFPA Official Definitions.

3.2.1* Approved. Acceptable to the authority having jurisdiction.

3.2.2* Authority Having Jurisdiction (AHJ). An organization, office, or individual responsible for enforcing the requirements of a code or standard, or for approving equipment, materials, an installation, or a procedure.

3.2.3 Labeled. Equipment or materials to which has been attached a label, symbol, or other identifying mark of an organization that is acceptable to the authority having jurisdiction and concerned with product evaluation, that maintains periodic inspection of production of labeled equipment or materials, and by whose labeling the manufacturer indicates compliance with appropriate standards or performance in a specified manner.

3.2.4* Listed. Equipment, materials, or services included in a list published by an organization that is acceptable to the authority having jurisdiction and concerned with evaluation of products or services, that maintains periodic inspection of production of listed equipment or materials or periodic evaluation of services, and whose listing states that either the equipment, material, or service meets appropriate designated standards or has been tested and found suitable for a specified purpose.

3.2.5 Shall. Indicates a mandatory requirement.

3.2.6 Should. Indicates a recommendation or that which is advised but not required.

3.2.7 Standard. A document, the main text of which contains only mandatory provisions using the word "shall" to indicate requirements and which is in a form generally suitable for mandatory reference by another standard or code or for adoption into law. Nonmandatory provisions are not to be considered a part of the requirements of a standard and shall be located in an appendix, annex, footnote, informational note, or other means as permitted in the *Manual of Style for NFPA Technical Committee Documents*.

3.3 General Definitions.

▲ **3.3.1 Appurtenance.** An accessory or attachment that enables the private fire service main to perform its intended function.

▲ **3.3.2 Corrosion-Resistant Piping.** Piping that has the property of being able to withstand deterioration of its surface or its properties when exposed to its environment.

▲ **3.3.3 Corrosion-Retardant Material.** A lining or coating material that when applied to piping or appurtenances has the property of reducing or slowing the deterioration of the object's surface or properties when exposed to its environment.

▲ **3.3.4 Fire Department Connection.** A connection through which the fire department can pump supplemental water into the sprinkler system, standpipe, or other system, furnishing water for fire extinguishment to supplement existing water supplies.

▲ **3.3.5 Fire Pump.** A pump that is a provider of liquid flow and pressure dedicated to fire protection. [**20,** 2010]

3.3.6 Hose House. An enclosure located over or adjacent to a hydrant or other water supply designed to contain the necessary hose nozzles, hose wrenches, gaskets, and spanners to be used in fire fighting in conjunction with and to provide aid to the local fire department.

3.3.7 Hydrant Butt. The hose connection outlet of a hydrant.

3.3.8 Hydraulically Calculated Water Demand Flow Rate. The waterflow rate for a system or hose stream that has been calculated using accepted engineering practices.

3.3.9 Pressure.

▲ **3.3.9.1** ***Residual Pressure.*** The pressure that exists in the distribution system, measured at the residual hydrant at the time the flow readings are taken at the flow hydrants.

▲ **3.3.9.2** ***Static Pressure.*** The pressure that exists at a given point under normal distribution system conditions measured at the residual hydrant with no hydrants flowing.

▲ **3.3.10* Pressure-Regulating Device.** A device designed for the purpose of reducing, regulating, controlling, or restricting water pressure.

3.3.11* Private Fire Service Main. Private fire service main, as used in this standard, is that pipe and its appurtenances on private property (1) between a source of water and the base of the system riser for water-based fire protection systems, (2) between a source of water and inlets to foam-making systems, (3) between a source of water and the base elbow

Copyright 2013 National Fire Protection Association (NFPA). Licensed, by agreement, for individual use and single download via NFCSS All Access on June 6, 2013 to GATEWAY TECH COLLEGE for designated user 0171780. No other reproduction or transmission in any form permitted without written permission of NFPA. For inquires or to report unauthorized use, contact licensing@nfpa.org. This NFCSS All Access subscription expires on 12/31/2013.

of private hydrants or monitor nozzles, and (4) used as fire pump suction and discharge piping, (5) beginning at the inlet side of the check valve on a gravity or pressure tank.

3.3.12 Pumper Outlet. The hydrant outlet intended for use by fire departments for taking supply from the hydrant for pumpers.

▲ **3.3.13 Rated Capacity.** The flow available from a hydrant at the designated residual pressure (rated pressure) either measured or calculated.

3.3.14 Test.

▲ **3.3.14.1** ***Flow Test.*** A test performed by the flow and measurement of water from one hydrant and the static and residual pressures from an adjacent hydrant for the purpose of determining the available water supply at that location.

▲ **3.3.14.2** ***Flushing Test.*** A test of a piping system using high velocity flows to remove debris from the piping system prior to it being placed in service.

▲ **3.3.14.3** ***Hydrostatic Test.*** A test of a closed piping system and its attached appurtenances consisting of subjecting the piping to an increased internal pressure for a specified period of duration to verify system integrity and leak rates.

3.3.15 Valve.

3.3.15.1 ***Check Valve.*** A valve that allows flow in one direction only.

▲ **3.3.15.2** ***Indicating Valve.*** A valve that has components that show if the valve is open or closed. Examples are outside screw and yoke (OS&Y) gate valves and underground gate valves with indicator posts.

3.4 Hydrant Definitions.

3.4.1 Hydrant. An exterior valved connection to a water supply system that provides hose connections.

▲ **3.4.1.1*** ***Dry Barrel Hydrant.*** This is the most common type of hydrant; it has a control valve below the frost line between the footpiece and the barrel.

3.4.1.2 ***Flow Hydrant.*** The hydrant that is used for the flow and flow measurement of water during a flow test.

▲ **3.4.1.3*** ***Private Fire Hydrant.*** A valved connection on a water supply system having one or more outlets and that is used to supply hose and fire department pumpers with water on private property.

▲ **3.4.1.4** ***Public Hydrant.*** A valved connection on a water supply system having one or more outlets and that is used to supply hose and fire department pumpers with water.

3.4.1.5 ***Residual Hydrant.*** The hydrant that is used for measuring static and residual pressures during a flow test.

▲ **3.4.1.6** ***Wet Barrel Hydrant.*** A type of hydrant that sometimes is used where there is no danger of freezing weather. Each outlet on a wet barrel hydrant is provided with a valved outlet threaded for fire hose.

Chapter 4 General Requirements

4.1* Plans.

▲ **4.1.1** Working plans shall be submitted for approval to the authority having jurisdiction before any equipment is installed or remodeled.

4.1.2 Deviation from approved plans shall require permission of the authority having jurisdiction.

▲ **4.1.3** Working plans shall be drawn to an indicated scale on sheets of uniform size, with a plan of each floor as applicable, and shall include the following items that pertain to the design of the system:

(1) Name of owner
(2) Location, including street address
(3) Point of compass
(4) A graphic representation of the scale used on all plans
(5) Name and address of contractor
(6) Size and location of all water supplies
(7) Size and location of standpipe risers, hose outlets, hand hose, monitor nozzles, and related equipment
(8) The following items that pertain to private fire service mains:
  (a) Size
  (b) Length
  (c) Location
  (d) Weight
  (e) Material
  (f) Point of connection to city main
  (g) Sizes, types, and locations of valves, valve indicators, regulators, meters, and valve pits
  (h) Depth at which the top of the pipe is laid below grade
  (i) Method of restraint
(9) The following items that pertain to hydrants:
  (a) Size and location, including size and number of outlets and whether outlets are to be equipped with independent gate valves
  (b) Thread size and coupling adapter specifications if different from NFPA 1963
  (c) Whether hose houses and equipment are to be provided, and by whom
  (d) Static and residual hydrants used in flow
  (e) Method of restraint
(10) Size, location, and piping arrangement of fire department connections

4.1.4 The working plan submittal shall include the manufacturer's installation instructions for any specially listed equipment, including descriptions, applications, and limitations for any devices, piping, or fittings.

4.2 Installation Work.

4.2.1 Installation work shall be performed by fully experienced and responsible persons.

▲ **4.2.2** The authority having jurisdiction shall always be consulted before the installation or remodeling of private fire service mains.

Chapter 5 Water Supplies

5.1* Connection to Waterworks Systems.

5.1.1 A connection to a reliable waterworks system shall be an acceptable water supply source.

▲ **5.1.2*** The volume and pressure of a public water supply shall be determined from waterflow test data or other approved method.

Copyright 2013 National Fire Protection Association (NFPA). Licensed, by agreement, for individual use and single download via NFCSS All Access on June 6, 2013 to GATEWAY TECH COLLEGE for designated user 0171780. No other reproduction or transmission in any form permitted without written permission of NFPA. For inquires or to report unauthorized use, contact licensing@nfpa.org. This NFCSS All Access subscription expires on 12/31/2013.

5.2 Size of Fire Mains.

5.2.1 Private Fire Service Mains. Pipe smaller than 6 in. (152 mm) in diameter shall not be installed as a private service main supplying hydrants.

5.2.2 Mains Not Supplying Hydrants. For mains that do not supply hydrants, sizes smaller than 6 in. (152 mm) shall be permitted to be used subject to the following restrictions:

(1) The main shall supply only the following types of systems:
  (a) Automatic sprinkler systems
  (b) Open sprinkler systems
  (c) Water spray fixed systems
  (d) Foam systems
  (e) Standpipe systems
(2) Hydraulic calculations shall show that the main is able to supply the total demand at the appropriate pressure.
(3) Systems that are not hydraulically calculated shall have a main at least as large as the riser.

5.3 Pressure-Regulating Devices and Meters.

5.3.1 No pressure-regulating valve shall be used in the water supply, except by special permission of the authority having jurisdiction.

5.3.2 Where meters are required by other authorities, they shall be listed.

5.4* Connection from Waterworks Systems.

5.4.1 The requirements of the public health authority having jurisdiction shall be determined and followed.

5.4.2 Where equipment is installed to guard against possible contamination of the public water system, such equipment and devices shall be listed for fire protection service.

5.5 Connections to Public Water Systems. Connections to public water systems shall be arranged to be isolated by one of the methods permitted in 6.2.11.

5.6* Pumps. A single, automatically controlled fire pump installed in accordance with NFPA 20 shall be an acceptable water supply source.

5.7 Tanks. Tanks shall be installed in accordance with NFPA 22.

5.8 Penstocks, Flumes, Rivers, Lakes, or Reservoirs. Water supply connections from penstocks, flumes, rivers, lakes, or reservoirs shall be arranged to avoid mud and sediment and shall be provided with approved, double, removable screens or approved strainers installed in an approved manner.

5.9* Fire Department Connections.

5.9.1 General. Where the authority having jurisdiction requires a remote fire department connection, for systems requiring one by another standard, a fire department connection shall be provided as described in Section 5.9.

5.9.1.1 Fire department connections shall not be required where approved by the authority having jurisdiction.

5.9.1.2 Fire department connections shall be supported.

5.9.1.3 Fire department connections shall be of an approved type.

5.9.1.4 Fire department connections shall be equipped with listed plugs or caps that are secured and arranged for easy removal by fire departments.

5.9.1.5 Fire department connections shall be protected where subject to mechanical damage.

5.9.2 Couplings.

5.9.2.1 The fire department connection(s) shall use an NH internal threaded swivel fitting(s) with an NH standard thread(s).

5.9.2.2 At least one of the connections shall be the 2.5 to 7.5 NH standard thread specified in NFPA 1963.

5.9.2.3 Where local fire department connections do not conform to NFPA 1963, the authority having jurisdiction shall designate the connection to be used.

5.9.2.4 The use of threadless couplings shall be permitted where required by the authority having jurisdiction and where listed for such use.

5.9.3 Valves.

5.9.3.1 A listed check valve shall be installed in each fire department connection.

5.9.3.2 No shutoff valve shall be permitted in the piping from the fire department connection piping to the point that the fire department connection piping connects to the system piping.

5.9.4 Drainage.

5.9.4.1 The pipe between the check valve and the outside hose coupling shall be equipped with an approved automatic drip.

5.9.4.2 The automatic drip shall be installed in a location that permits inspection and testing as required by NFPA 25 and reduces the likelihood of freezing.

5.9.4.3 An automatic drip shall not be required in areas not subject to freezing.

5.9.5 Location and Signage.

5.9.5.1* Fire department connections shall be located at the nearest point of fire department apparatus accessibility or at a location approved by the authority having jurisdiction.

5.9.5.2* Fire department connections shall be located and arranged so that hose lines can be attached to the inlets without interference.

5.9.5.3* Each fire department connection shall be designated by a sign as follows:

(1) The sign shall have raised or engraved letters at least 1 in. (25.4 mm) in height on a plate or fitting.
(2)*The sign shall indicate the type of system for which the connection is intended.

5.9.5.4 Where the system demand pressure exceeds 150 psi (10.3 bar), the sign required by 5.9.5.3 shall indicate the required design pressure.

5.9.5.5 Where a fire department connection only supplies a portion(s) of the building, a sign shall be attached to indicate the portion(s) of the building supplied.

Chapter 6 Valves

6.1 Types of Valves.

6.1.1 All valves controlling connections to water supplies and to supply pipes to sprinklers shall be listed indicating valves.

Copyright 2013 National Fire Protection Association (NFPA). Licensed, by agreement, for individual use and single download via NFCSS All Access on June 6, 2013 to GATEWAY TECH COLLEGE for designated user 0171780. No other reproduction or transmission in any form permitted without written permission of NFPA. For inquires or to report unauthorized use, contact licensing@nfpa.org. This NFCSS All Access subscription expires on 12/31/2013.

▲ **6.1.2** Indicating valves shall not close in less than 5 seconds when operated at maximum possible speed from the fully open position.

6.1.3 A listed underground gate valve equipped with a listed indicator post shall be permitted.

▲ **6.1.4** A listed water control valve assembly with a reliable position indication connected to a remote supervisory station shall be permitted.

▲ **6.1.5*** A nonindicating valve, such as an underground gate valve with approved roadway box, complete with T-wrench, and accepted by the authority having jurisdiction, shall be permitted.

6.2 Valves Controlling Water Supplies.

▲ **6.2.1** At least one valve shall be installed in each source of water supply.

▲ **6.2.2** No shutoff valve shall be permitted in the piping from the fire department connection to the point that the fire department connection piping connects to the system piping.

6.2.3 Where more than one source of water supply exists, a check valve shall be installed in each connection.

6.2.4 Where break tanks are used with automatic fire pumps, a check valve shall not be required in the break tank connection.

▲ **6.2.5*** In a connection serving as one source of supply, listed indicating valves or post indicator valves shall be installed on both sides of all check valves required in 6.2.3.

6.2.6 In the discharge pipe from a pressure tank or a gravity tank of less than 15,000 gal (56.78 m^3) capacity, a control valve shall not be required to be installed on the tank side of the check valve.

6.2.7* The following requirements shall apply where a gravity tank is located on a tower in the yard:

(1) The control valve on the tank side of the check valve shall be an outside screw and yoke or a listed indicating valve.
(2) The other control valve shall be either an outside screw and yoke, a listed indicating valve, or a listed valve having a post-type indicator.

6.2.8* The following requirements shall apply where a gravity tank is located on a building:

(1) Both control valves shall be outside screw and yoke or listed indicating valves.
(2) All fittings inside the building, except the drain tee and heater connections, shall be under the control of a listed valve.

6.2.9 One of the following requirements shall be met where a pump is located in a combustible pump house or exposed to danger from fire or falling walls, or where a tank discharges into a private fire service main fed by another supply:

(1)*The check valve in the connection shall be located in a pit.
(2) The control valve shall be of the post indicator type and located a safe distance outside buildings.

6.2.10* All control valves shall be located where accessible and free of obstructions.

6.2.11 All connections to private fire service mains for fire protection systems shall be arranged in accordance with one of the following so that they can be isolated:

(1)*A post indicator valve installed not less than 40 ft (12 m) from the building
  (a) For buildings less than 40 ft (12 m) in height, a post indicator valve shall be permitted to be installed closer than 40 ft (12 m) but at least as far from the building as the height of the wall facing the post indicator valve.
(2) A wall post indicator valve
(3) An indicating valve in a pit, installed in accordance with Section 6.4
(4)*A backflow preventer with at least one indicating valve not less than 40 ft (12 m) from the building
  (a) For buildings less than 40 ft (12 m) in height, a backflow preventer with at least one indicating valve shall be permitted to be installed closer than 40 ft (12 m) but at least as far from the building as the height of the wall facing the backflow preventer.
(5)*A nonindicating valve, such as an underground gate valve with an approved roadway box, complete with T-wrench, located not less than 40 ft (12 m) from the building
  (a) For buildings less than 40 ft (12 m) in height, a nonindicating valve, such as an underground gate valve with an approved roadway box, complete with T-wrench, shall be permitted to be installed closer than 40 ft (12 m) but at least as far from the building as the height of the wall facing the backflow preventer.
(6) Control valves installed in a fire-rated room accessible from the exterior
(7) Control valves in a fire-rated stair enclosure accessible from the exterior as permitted by the authority having jurisdiction

6.3 Post Indicator Valves.

6.3.1 Where post indicator valves are used, they shall be set so that the top of the post is 32 in. to 40 in. (0.8 m to 1.0 m) above the final grade.

▲ **6.3.2** Where post indicator valves are used, they shall be protected against mechanical damage where needed.

• **6.4 Valves in Pits.**

6.4.1 Valve pits located at or near the base of the riser of an elevated tank shall be designed in accordance with Chapter 14 of NFPA 22.

▲ **6.4.2** Where used, valve pits shall be of adequate size and accessible for inspection, operation, testing, maintenance, and removal of equipment contained therein.

6.4.3 Valve pits shall be constructed and arranged to properly protect the installed equipment from movement of earth, freezing, and accumulation of water.

6.4.3.1 Depending on soil conditions and the size of the pit, valve pits shall be permitted to be constructed of any of the following materials:

(1) Poured-in-place or precast concrete, with or without reinforcement
(2) Brick
(3) Other approved materials

Copyright 2013 National Fire Protection Association (NFPA). Licensed, by agreement, for individual use and single download via NFCSS All Access on June 6, 2013 to GATEWAY TECH COLLEGE for designated user 0171780. No other reproduction or transmission in any form permitted without written permission of NFPA. For inquires or to report unauthorized use, contact licensing@nfpa.org. This NFCSS All Access subscription expires on 12/31/2013.

6.4.3.2 Where the water table is low and the soil is porous, crushed stone or gravel shall be permitted to be used for the floor of the pit.

6.4.4 The location of the valve shall be marked, and the cover of the pit shall be kept free of obstructions.

6.5 Backflow Prevention Assemblies.

6.5.1 Where used in accordance with 6.2.11(4), backflow prevention assemblies shall be installed in accordance with their installation instructions.

6.5.2 Where backflow prevention assemblies are used, they shall be protected against mechanical damage where needed.

6.6 Sectional Valves.

▲ **6.6.1*** Sectional valves shall be provided at appropriate points within piping sections such that the number of fire protection connections between sectional valves does not exceed six.

6.6.2 A sectional valve shall be provided at the following locations:

(1) On each bank where a main crosses water
(2) Outside the building foundation(s) where a main or a section of a main runs under a building

6.7 Identifying and Securing Valves.

▲ **6.7.1** Identification signs shall be provided at each valve to indicate its function and what it controls.

6.7.1.1 Identification signs in 6.7.1 shall not be required for underground gate valves with roadway boxes.

6.7.2* Control valves shall be supervised by one of the following methods:

(1) Central station, proprietary, or remote station signaling service
(2) Local signaling service that causes the sounding of an audible signal at a constantly attended location
(3) An approved procedure to ensure that valves are locked in the correct position
(4) An approved procedure to ensure that valves are located within fenced enclosures under the control of the owner, sealed in the open position, and inspected weekly

6.7.3 Supervision of underground gate valves with roadway boxes shall not be required.

6.8 Check Valves. Check valves shall be installed in a vertical or horizontal position in accordance with their listing.

Chapter 7 Hydrants

7.1* General.

7.1.1 Hydrants shall be of an approved type and have not less than a 6 in. (152 mm) diameter connection with the mains.

7.1.1.1 A valve shall be installed in the hydrant connection.

▲ **7.1.1.1.1** Valves in the hydrant connection shall be installed within 20 ft (6.1 m) of the hydrant.

▲ **7.1.1.1.2** Where valves cannot be located in accordance with 7.1.1.1.1, valve locations shall be permitted where approved by the authority having jurisdiction.

7.1.1.2* The number, size, and arrangement of outlets; the size of the main valve opening; and the size of the barrel shall be suitable for the protection to be provided and shall be approved by the authority having jurisdiction.

7.1.1.3 Independent gate valves on 2½ in. (64 mm) outlets shall be permitted.

7.1.2 Hydrant outlet threads shall have NHS external threads for the size outlet(s) supplied as specified in NFPA 1963.

7.1.3 Where local fire department connections do not conform to NFPA 1963, the authority having jurisdiction shall designate the connection to be used.

7.2 Number and Location.

▲ **7.2.1*** Hydrants shall be provided and spaced in accordance with the requirements of the authority having jurisdiction.

7.2.2 Public hydrants shall be permitted to be recognized as meeting all or part of the requirements of Section 7.2.

▲ **7.2.3*** Hydrants shall be located not less than 40 ft (12 m) from the buildings to be protected.

7.2.4 Where hydrants cannot be located in accordance with 7.2.3, locations closer than 40 ft (12.2 m) from the building or wall hydrants shall be permitted to be used where approved by the authority having jurisdiction.

7.2.5 Hydrants shall not be installed at less than the equivalent depth of burial from retaining walls where there is danger of frost through the walls.

7.3 Installation.

▲ **7.3.1*** Hydrants shall be set on flat stones or concrete slabs and shall be provided with small stones (or the equivalent) placed about the drain to ensure drainage.

7.3.2 Where soil is of such a nature that the hydrants will not drain properly with the arrangement specified in 7.3.1, or where groundwater stands at levels above that of the drain, the hydrant drain shall be plugged at the time of installation.

7.3.2.1 If the drain is plugged, hydrants in service in cold climates shall be pumped out after usage.

7.3.2.2 Such hydrants shall be marked to indicate the need for pumping out after usage.

▲ **7.3.3*** The center of a hose outlet shall be not less than 18 in. (457 mm) above final grade or, where located in a hose house, 12 in. (305 mm) above the floor.

7.3.4 Hydrants shall be fastened to piping and anchored in accordance with the requirements of Chapter 10.

7.3.5 Hydrants shall be protected if subject to mechanical damage.

7.3.6 The means of hydrant protection shall be arranged in a manner that does not interfere with the connection to, or operation of, hydrants.

7.3.7 The following shall not be installed in the service stub between a fire hydrant and private water supply piping:

(1) Check valves
(2) Detector check valves
(3) Backflow prevention valves
(4) Other similar appurtenances

Copyright 2013 National Fire Protection Association (NFPA). Licensed, by agreement, for individual use and single download via NFCSS All Access on June 6, 2013 to GATEWAY TECH COLLEGE for designated user 0171780. No other reproduction or transmission in any form permitted without written permission of NFPA. For inquires or to report unauthorized use, contact licensing@nfpa.org. This NFCSS All Access subscription expires on 12/31/2013.

Chapter 8 Hose Houses and Equipment

8.1 General.

▲ **8.1.1*** A supply of hose and equipment shall be provided where hydrants are intended for use by plant personnel or a fire brigade.

8.1.1.1 The quantity and type of hose and equipment shall depend on the following:

(1) Number and location of hydrants relative to the protected property
(2) Extent of the hazard
(3) Fire-fighting capabilities of potential users

8.1.1.2 The authority having jurisdiction shall be consulted regarding quantity and type of hose.

8.1.2 Hose shall be stored so it is accessible and is protected from the weather by storing in hose houses or by placing hose reels or hose carriers in weatherproof enclosures.

8.1.3* Hose shall conform to NFPA 1961.

8.1.4 Hose Connections.

8.1.4.1 Hose connections shall have external national hose standard (NHS) threads, for the valve size specified, in accordance with NFPA 1963.

8.1.4.2 Hose connections shall be equipped with caps to protect the hose threads.

8.1.4.3 Where local fire department hose threads do not conform to NFPA 1963, the authority having jurisdiction shall designate the hose threads to be used.

8.2 Location.

8.2.1 Where hose houses are utilized, they shall be located over, or immediately adjacent to, the hydrant.

8.2.2 Hydrants within hose houses shall be as close to the front of the house as possible and still allow sufficient room in back of the doors for the hose gates and the attached hose.

8.2.3 Where hose reels or hose carriers are utilized, they shall be located so that the hose can be brought into use at a hydrant.

8.3 Construction.

8.3.1 Hose houses shall be of substantial construction on foundations.

8.3.2 The construction shall protect the hose from weather and vermin and shall be designed so that hose lines can be brought into use.

8.3.3 Clearance shall be provided for operation of the hydrant wrench.

8.3.4 Ventilation shall be provided.

8.3.5 The exterior shall be painted or otherwise protected against deterioration.

8.4* Size and Arrangement. Hose houses shall be of a size and arrangement that provide shelves or racks for the hose and equipment.

8.5 Marking. Hose houses shall be plainly identified.

8.6 General Equipment.

8.6.1* Where hose houses are used in addition to the hose, each shall be equipped with the following:

(1) Two approved adjustable spray–solid stream nozzles equipped with shutoffs for each size of hose provided
(2) One hydrant wrench (in addition to wrench on hydrant)
(3) Four coupling spanners for each size hose provided
(4) Two hose coupling gaskets for each size hose

8.6.2 Where two sizes of hose and nozzles are provided, reducers or gated wyes shall be included in the hose house equipment.

8.7 Domestic Service Use Prohibited. The use of hydrants and hose for purposes other than fire-related services shall be prohibited.

Chapter 9 Master Streams

▲ **9.1* Master Streams.** Master streams shall be delivered by monitor nozzles, hydrant-mounted monitor nozzles, and similar master stream equipment capable of delivering more than 250 gpm (946 L/min).

9.2 Application and Special Considerations. Master streams shall be provided as protection for the following:

(1) Large amounts of combustible materials located in yards
(2) Average amounts of combustible materials in inaccessible locations
(3) Occupancies presenting special hazards, as required by the authority having jurisdiction

Chapter 10 Underground Piping

10.1* Piping Materials.

10.1.1* Listing. Piping shall be listed for fire protection service or shall comply with the standards in Table 10.1.1.

Table 10.1.1 Manufacturing Standards for Underground Pipe

Materials and Dimensions	Standard
Ductile Iron	
Cement Mortar Lining for Ductile Iron Pipe and Fittings for Water	AWWA C104
Polyethylene Encasement for Ductile Iron Pipe Systems	AWWA C105
Ductile Iron and Gray Iron Fittings, 3 in. Through 48 in., for Water and Other Liquids	AWWA C110
Rubber-Gasket Joints for Ductile Iron Pressure Pipe and Fittings	AWWA C111
Flanged Ductile Iron Pipe with Ductile Iron or Gray Iron Threaded Flanges	AWWA C115
Protective Fusion-Bonded Epoxy Coatings for the Interior and Exterior Surfaces of Ductile-Iron and Gray-Iron Fittings for Water Supply Service	AWWA C116
Thickness Design of Ductile Iron Pipe	AWWA C150
Ductile Iron Pipe, Centrifugally Cast for Water	AWWA C151

Copyright 2013 National Fire Protection Association (NFPA). Licensed, by agreement, for individual use and single download via NFCSS All Access on June 6, 2013 to GATEWAY TECH COLLEGE for designated user 0171780. No other reproduction or transmission in any form permitted without written permission of NFPA. For inquires or to report unauthorized use, contact licensing@nfpa.org. This NFCSS All Access subscription expires on 12/31/2013.

Table 10.1.1 *Continued*

Materials and Dimensions	Standard
Ductile-Iron Compact Fittings for Water Service	AWWA C153
Standard for the Installation of Ductile Iron Water Mains and Their Appurtenances	AWWA C600
Steel	
Steel Water Pipe 6 in. and Larger	AWWA C200
Coal-Tar Protective Coatings and Linings for Steel Water Pipelines Enamel and Tape — Hot Applied	AWWA C203
Cement-Mortar Protective Lining and Coating for Steel Water Pipe 4 in. and Larger — Shop Applied	AWWA C205
Field Welding of Steel Water Pipe	AWWA C206
Steel Pipe Flanges for Waterworks Service — Sizes 4 in. Through 144 in.	AWWA C207
Dimensions for Fabricated Steel Water Pipe Fittings	AWWA C208
A Guide for Steel Pipe Design and Installation	AWWA M11
Concrete	
Reinforced Concrete Pressure Pipe, Steel-Cylinder Type	AWWA C300
Prestressed Concrete Pressure Pipe, Steel-Cylinder Type	AWWA C301
Reinforced Concrete Pressure Pipe, Non-Cylinder Type	AWWA C302
Reinforced Concrete Pressure Pipe, Steel-Cylinder Type, Pretensioned	AWWA C303
Standard for Asbestos-Cement Distribution Pipe, 4 in. Through 16 in., for Water Distribution Systems	AWWA C400
Standard for the Selection of Asbestos-Cement Pressure Pipe	AWWA C401
Cement-Mortar Lining of Water Pipe Lines 4 in. and Larger — in Place	AWWA C602
Standard for the Installation of Asbestos-Cement Water Pipe	AWWA C603
Plastic	
Polyvinyl Chloride (PVC) Pressure Pipe, 4 in. Through 12 in., for Water Distribution	AWWA C900
Polyvinyl Chloride (PVC) Pressure Pipe, 14 in. Through 48 in., for Water Distribution	AWWA C905
Polyethylene (PE) Pressure Pipe and Fittings, 4 in. (100 mm) Through 63 in. (1575 mm) for Water Distribution	AWWA C906
Copper	
Specification for Seamless Copper Tube	ASTM B 75
Specification for Seamless Copper Water Tube	ASTM B 88
Requirements for Wrought Seamless Copper and Copper-Alloy Tube	ASTM B 251

▲ **10.1.2 Steel Pipe.** Steel piping shall not be used for general underground service unless specifically listed for such service.

▲ **10.1.3 Steel Pipe Used with Fire Department Connections.** Where externally coated and wrapped and internally galvanized, steel pipe shall be permitted to be used between the check valve and the outside hose coupling for the fire department connection.

10.1.4* Pipe Type and Class. The type and class of pipe for a particular underground installation shall be determined through consideration of the following factors:

(1) Fire resistance of the pipe
(2) Maximum system working pressure
(3) Depth at which the pipe is to be installed
(4) Soil conditions
(5) Corrosion
(6) Susceptibility of pipe to other external loads, including earth loads, installation beneath buildings, and traffic or vehicle loads

▲ **10.1.5* Working Pressure.** Piping, fittings, and other system components shall be rated for the maximum system working pressure to which they are exposed but shall not be rated at less than 150 psi (10 bar).

▲ **10.1.6* Lining of Buried Pipe.**

10.1.6.1 Unless the requirements of 10.1.6.2 are met, all ferrous metal pipe shall be lined in accordance with the applicable standards in Table 10.1.1.

▲ **10.1.6.2** Steel pipe utilized in fire department connections and protected in accordance with the requirements of 10.1.3 shall not be required to be internally lined.

▲ **10.2 Fittings.**

10.2.1* Buried Fittings. Fittings shall be of an approved type with joints and pressure class ratings compatible with the pipe used.

10.2.2 Standard Fittings.

10.2.2.1 Fittings shall meet the standards in Table 10.2.2.1 or shall be in accordance with 10.2.3.

10.2.2.2 In addition to the standards in Table 10.2.2.2, CPVC fittings shall also be in accordance with 10.2.3 and with the portions of the ASTM standards specified in Table 10.2.2.2 that apply to fire protection service.

10.2.3 Special Listed Fittings. Other types of fittings investigated for suitability in automatic sprinkler installations and listed for this service, including, but not limited to, polybutylene, CPVC, and steel differing from that provided in Table 10.2.2.1, shall be permitted when installed in accordance with their listing limitations, including installation instructions.

10.2.4 Pressure Limits. Listed fittings shall be permitted for the system pressures as specified in their listings, but not less than 150 psi (10 bar).

▲ **10.3 Joining of Pipe and Fittings.**

10.3.1* Buried Joints. Joints shall be approved.

10.3.2 Threaded Pipe and Fittings. All threaded steel pipe and fittings shall have threads cut in accordance with ASME B1.20.1.

10.3.3* Groove Joining Methods. Pipes joined with grooved fittings shall be joined by a listed combination of fittings, gaskets, and grooves.

10.3.4 Brazed and Pressure Fitting Methods. Joints for the connection of copper tube shall be brazed or joined using pressure fittings as specified in Table 10.2.2.1.

10.3.5 Other Joining Methods. Other joining methods listed for this service shall be permitted where installed in accordance with their listing limitations.

Copyright 2013 National Fire Protection Association (NFPA). Licensed, by agreement, for individual use and single download via NFCSS All Access on June 6, 2013 to GATEWAY TECH COLLEGE for designated user 0171780. No other reproduction or transmission in any form permitted without written permission of NFPA. For inquires or to report unauthorized use, contact licensing@nfpa.org. This NFCSS All Access subscription expires on 12/31/2013.

Table 10.2.2.1 Fittings Materials and Dimensions

Materials and Dimensions	Standard
Cast Iron	
Gray Iron Threaded Fittings, Classes 125 and 250	ASME B16.4
Gray Iron Pipe Flanges and Flanged Fittings, Classes 12, 125, and 250	ASME B16.1
Malleable Iron	
Malleable Iron Threaded Fittings, Class 150 and 300	ASME B16.3
Steel	
Factory-Made Wrought Steel Buttweld Fittings	ASME B16.9
Buttwelding Ends	ASME B16.25
Specification for Piping Fittings of Wrought Carbon Steel and Alloy Steel for Moderate and Elevated Temperatures	ASTM A 234
Pipe Flanges and Flanged Fittings, NPS ½ Through 24	ASME B16.5
Forged Steel Fittings, Socket Welded and Threaded	ASME B16.11
Copper	
Wrought Copper and Bronze Solder Joint Pressure Fittings	ASME B16.22
Cast Bronze Solder Joint Pressure Fittings	ASME B16.18

Table 10.2.2.2 Specially Listed Fittings Materials and Dimensions

Materials and Dimensions	Standard
Chlorinated Polyvinyl Chloride (CPVC) Specification for Schedule 80 CPVC Threaded Fittings	ASTM F 437
Specification for Schedule 40 CPVC Socket-Type Fittings	ASTM F 438
Specification for Schedule 80 CPVC Socket-Type Fittings	ASTM F 439

10.3.6 Pipe Joint Assembly.

10.3.6.1 Joints shall be assembled by persons familiar with the particular materials being used and in accordance with the manufacturer's instructions and specifications.

10.3.6.2* All bolted joint accessories shall be cleaned and thoroughly coated with asphalt or other corrosion-retarding material after installation.

10.4 Depth of Cover.

10.4.1* The depth of cover over water pipes shall be determined by the maximum depth of frost penetration in the locality where the pipe is laid.

10.4.2 The top of the pipe shall be buried not less than 1 ft (0.3 m) below the frost line for the locality.

10.4.3 In those locations where frost is not a factor, the depth of cover shall be not less than 2½ ft (0.8 m) to prevent mechanical damage.

10.4.4 Pipe under driveways shall be buried at a minimum depth of 3 ft (0.9 m).

10.4.5 Pipe under railroad tracks shall be buried at a minimum depth of 4 ft (1.2 m).

10.4.6 The depth of cover shall be measured from the top of the pipe to finished grade, and due consideration shall always be given to future or final grade and nature of soil.

10.5 Protection Against Freezing.

10.5.1* Where it is impracticable to bury pipe, pipe shall be permitted to be laid aboveground, provided that the pipe is protected against freezing and mechanical damage.

10.5.2 Pipe shall be buried below the frost line where entering streams and other bodies of water.

10.5.3 Where pipe is laid in water raceways or shallow streams, care shall be taken that there will be sufficient depth of running water between the pipe and the frost line during all seasons of frost; a safer method is to bury the pipe 1 ft (0.3 m) or more under the bed of the waterway.

10.5.4 Pipe shall be located at a distance from stream banks and embankment walls that prevents danger of freezing through the side of the bank.

10.6 Protection Against Damage.

10.6.1 Pipe shall not be run under the building except where permitted in 10.6.2 and 10.6.3.

10.6.2 Where approved, pipe shall be permitted to be run under buildings, and special precautions shall be taken, including the following:

(1) Arching the foundation walls over the pipe
(2) Running pipe in covered trenches
(3) Providing valves to isolate sections of pipe under buildings

10.6.3 Fire service mains shall be permitted to enter the building adjacent to the foundation.

10.6.3.1* The requirements of 10.6.2(2) and 10.6.2(3) shall not apply where fire service mains enter under the building no more than 10 ft (3 m) as measured from the outside edge of the building to the center of the vertical pipe.

10.6.4* Pipe joints shall not be located under foundation footings.

10.6.5* Piping shall be run at least 1 ft (305 mm) below the bottom of foundations/footers.

10.6.5.1 The requirements of 10.6.6 shall not apply when piping is sleeved.

10.6.6 Mains shall be subjected to an evaluation of the following specific loading conditions and protected, if necessary:

(1) Mains running under railroads carrying heavy cargo
(2) Mains running under large piles of heavy commodities
(3) Mains located in areas that subject the main to heavy shock and vibrations

10.6.7* Where it is necessary to join metal pipe with pipe of dissimilar metal, the joint shall be insulated against the passage of an electric current using an approved method.

Copyright 2013 National Fire Protection Association (NFPA). Licensed, by agreement, for individual use and single download via NFCSS All Access on June 6, 2013 to GATEWAY TECH COLLEGE for designated user 0171780. No other reproduction or transmission in any form permitted without written permission of NFPA. For inquires or to report unauthorized use, contact licensing@nfpa.org. This NFCSS All Access subscription expires on 12/31/2013.

▲ **10.6.8*** In no case shall the underground piping be used as a grounding electrode for electrical systems.

10.6.8.1* The requirement of 10.6.8 shall not preclude the bonding of the underground piping to the lightning protection grounding system as required by NFPA 780 in those cases where lightning protection is provided for the structure.

▲ **10.7 Requirement for Laying Pipe.**

10.7.1 Pipes, valves, hydrants, gaskets, and fittings shall be inspected for damage when received and shall be inspected prior to installation. *(See Figure 10.10.1.)*

10.7.2 The torquing of bolted joints shall be checked.

10.7.3 Pipe, valves, hydrants, and fittings shall be clean inside.

▲ **10.7.4** When work is stopped, the open ends of pipe, valves, hydrants, and fittings shall be plugged to prevent stones and foreign materials from entering.

10.7.5 All pipe, fittings, valves, and hydrants shall be carefully lowered into the trench using appropriate equipment and carefully examined for cracks or other defects while suspended above the trench.

10.7.6 Plain ends shall be inspected for signs of damage prior to installation.

10.7.7 Under no circumstances shall water main materials be dropped or dumped.

10.7.8 Pipe shall not be rolled or skidded against other pipe materials.

10.7.9 Pipes shall bear throughout their full length and shall not be supported by the bell ends only or by blocks.

10.7.10 If the ground is soft or of a quicksand nature, special provisions shall be made for supporting pipe.

10.7.11 Valves and fittings used with nonmetallic pipe shall be supported and restrained in accordance with the manufacturer's specifications.

▲ **10.8 Joint Restraint.**

10.8.1 General.

10.8.1.1* All tees, plugs, caps, bends, reducers, valves, and hydrant branches shall be restrained against movement by using thrust blocks in accordance with 10.8.2 or restrained joint systems in accordance with 10.8.3.

10.8.1.2* Piping with fused, threaded, grooved, or welded joints shall not require additional restraining, provided that such joints can pass the hydrostatic test of 10.10.2.2 without shifting of piping or leakage in excess of permitted amounts.

10.8.1.3 Steep Grades. On steep grades, mains shall be additionally restrained to prevent slipping.

10.8.1.3.1 Pipe shall be restrained at the bottom of a hill and at any turns (lateral or vertical).

10.8.1.3.2 The restraint specified in 10.8.1.3.1 shall be to natural rock or to suitable piers built on the downhill side of the bell.

10.8.1.3.3 Bell ends shall be installed facing uphill.

10.8.1.3.4 Straight runs on hills shall be restrained as determined by the design engineer.

▲ **10.8.2* Thrust Blocks.**

10.8.2.1 Thrust blocks shall be considered satisfactory where soil is suitable for their use.

10.8.2.2 Thrust blocks shall be of a concrete mix not leaner than one part cement, two and one-half parts sand, and five parts stone.

10.8.2.3 Thrust blocks shall be placed between undisturbed earth and the fitting to be restrained and shall be capable of resisting the calculated thrust forces.

10.8.2.4 Wherever possible, thrust blocks shall be placed so that the joints are accessible for repair.

10.8.3* Restrained Joint Systems. Fire mains utilizing restrained joint systems shall include one or more of the following:

(1) Locking mechanical or push-on joints
(2) Mechanical joints utilizing setscrew retainer glands
(3) Bolted flange joints
(4) Heat-fused or welded joints
(5) Pipe clamps and tie rods
(6) Threaded or grooved joints
(7) Other approved methods or devices

10.8.3.1 Sizing Clamps, Rods, Bolts, and Washers.

10.8.3.1.1 Clamps.

10.8.3.1.1.1 Clamps shall have the following dimensions:

(1) ½ in. × 2 in. (12.7 mm × 50.8 mm) for 4 in. (102 mm) to 6 in. (152 mm) pipe
(2) ⅝ in. × 2½ in. (15.9 mm × 63.5 mm) for 8 in. (204 mm) to 10 in. (254 mm) pipe
(3) ⅝ in. × 3 in. (15.9 mm × 76.2 mm) for 12 in. (305 mm) pipe

10.8.3.1.1.2 The diameter of a bolt hole shall be 1⁄16 in. (1.6 mm) larger than that of the corresponding bolt.

10.8.3.1.2 Rods.

10.8.3.1.2.1 Rods shall be not less than ⅝ in. (15.9 mm) in diameter.

10.8.3.1.2.2 Table 10.8.3.1.2.2 provides the numbers of various diameter rods that shall be used for a given pipe size.

Table 10.8.3.1.2.2 Rod Number — Diameter Combinations

Nominal Pipe Size (in.)	⅝ in. (15.9 mm)	¾ in. (19.1 mm)	⅞ in. (22.2 mm)	1 in. (25.4 mm)
4	2	—	—	—
6	2	—	—	—
8	3	2	—	—
10	4	3	2	—
12	6	4	3	2
14	8	5	4	3
16	10	7	5	4

Note: This table has been derived using pressure of 225 psi (15.5 bar) and design stress of 25,000 psi (172.4 MPa).

Copyright 2013 National Fire Protection Association (NFPA). Licensed, by agreement, for individual use and single download via NFCSS All Access on June 6, 2013 to GATEWAY TECH COLLEGE for designated user 0171780. No other reproduction or transmission in any form permitted without written permission of NFPA. For inquires or to report unauthorized use, contact licensing@nfpa.org. This NFCSS All Access subscription expires on 12/31/2013.

10.8.3.1.2.3 Where using bolting rods, the diameter of mechanical joint bolts shall limit the diameter of rods to ¾ in. (19.1 mm).

10.8.3.1.2.4 Threaded sections of rods shall not be formed or bent.

10.8.3.1.2.5 Where using clamps, rods shall be used in pairs for each clamp.

10.8.3.1.2.6 Assemblies in which a restraint is made by means of two clamps canted on the barrel of the pipe shall be permitted to use one rod per clamp if approved for the specific installation by the authority having jurisdiction.

10.8.3.1.2.7 Where using combinations of rods, the rods shall be symmetrically spaced.

10.8.3.1.3 Clamp Bolts. Clamp bolts shall have the following diameters:

(1) ⅝ in. (15.9 mm) for pipe 4 in. (102 mm), 6 in. (152 mm), and 8 in. (204 mm)
(2) ¾ in. (19.1 mm) for 10 in. (254 mm) pipe
(3) ⅞ in. (22.2 mm) for 12 in. (305 mm) pipe

10.8.3.1.4 Washers.

10.8.3.1.4.1 Washers shall be permitted to be cast iron or steel and round or square.

10.8.3.1.4.2 Cast iron washers shall have the following dimensions:

(1) ⅝ in. × 3 in. (15.9 mm × 76.2 mm) for 4 in. (102 mm), 6 in. (152 mm), 8 in. (204 mm), and 10 in. (254 mm) pipe
(2) ¾ in. × 3½ in. (19.1 mm × 88.9 mm) for 12 in. (305 mm) pipe

10.8.3.1.4.3 Steel washers shall have the following dimensions:

(1) ½ in. × 3 in. (12.7 mm × 76.2 mm) for 4 in. (102 mm), 6 in. (152 mm), 8 in. (204 mm), and 10 in. (254 mm) pipe
(2) ½ in. × 3½ in. (12.7 mm × 88.9 mm) for 12 in. (305 mm) pipe

10.8.3.1.4.4 The diameter of holes shall be ⅛ in. (3.2 mm) larger than that of rods.

10.8.3.2 Sizes of Restraint Straps for Tees.

10.8.3.2.1 Restraint straps for tees shall have the following dimensions:

(1) ⅝ in. (15.9 mm) thick and 2½ in. (63.5 mm) wide for 4 in. (102 mm), 6 in. (152 mm), 8 in. (204 mm), and 10 in. (254 mm) pipe
(2) ⅝ in. (15.9 mm) thick and 3 in. (76.2 mm) wide for 12 in. (305 mm) pipe

10.8.3.2.2 The diameter of rod holes shall be 1/16 in. (1.6 mm) larger than that of rods.

10.8.3.2.3 Figure 10.8.3.2.3 and Table 10.8.3.2.3 shall be used in sizing the restraint straps for both mechanical and push-on joint tee fittings.

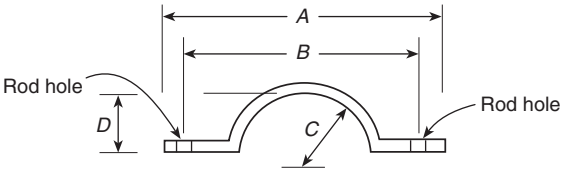

FIGURE 10.8.3.2.3 Restraint Straps for Tees.

10.8.3.3 Sizes of Plug Strap for Bell End of Pipe.

10.8.3.3.1 The strap shall be ¾ in. (19.1 mm) thick and 2½ in. (63.5 mm) wide.

10.8.3.3.2 The strap length shall be the same as dimension *A* for tee straps as shown in Figure 10.8.3.2.3.

10.8.3.3.3 The distance between the centers of rod holes shall be the same as dimension *B* for tee straps as shown in Figure 10.8.3.2.3.

10.8.3.4 Material. Clamps, rods, rod couplings or turnbuckles, bolts, washers, restraint straps, and plug straps shall be of a material that has physical and chemical characteristics that indicate its deterioration under stress can be predicted with reliability.

10.8.3.5* Corrosion Resistance. After installation, rods, nuts, bolts, washers, clamps, and other restraining devices shall be cleaned and thoroughly coated with a bituminous or other acceptable corrosion-retarding material.

10.9 Backfilling.

▲ **10.9.1** Backfill shall be tamped in layers or puddled under and around pipes to prevent settlement or lateral movement and shall contain no ashes, cinders, refuse, organic matter, or other corrosive materials.

Table 10.8.3.2.3 Restraint Straps for Tees

Nominal Pipe Size (in.)	A		B		C		D	
	in.	mm	in.	mm	in.	mm	in.	mm
4	12½	318	10⅛	257	2½	64	1¾	44
6	14½	368	12⅛	308	3 9/16	90	2 13/16	71
8	16¾	425	14⅜	365	4 21/32	118	3 29/32	99
10	19 1/16	484	16 11/16	424	5¾	146	5	127
12	22 5/16	567	19 3/16	487	6¾	171	5⅞	149

Copyright 2013 National Fire Protection Association (NFPA). Licensed, by agreement, for individual use and single download via NFCSS All Access on June 6, 2013 to GATEWAY TECH COLLEGE for designated user 0171780. No other reproduction or transmission in any form permitted without written permission of NFPA. For inquires or to report unauthorized use, contact licensing@nfpa.org. This NFCSS All Access subscription expires on 12/31/2013.

▲ **10.9.2** Rocks shall not be placed in trenches.

10.9.3 Frozen earth shall not be used for backfilling.

10.9.4 In trenches cut through rock, tamped backfill shall be used for at least 6 in. (150 mm) under and around the pipe and for at least 2 ft (0.6 m) above the pipe.

10.10 Testing and Acceptance.

10.10.1 Approval of Underground Piping. The installing contractor shall be responsible for the following:

(1) Notifying the authority having jurisdiction and the owner's representative of the time and date testing is to be performed
(2) Performing all required acceptance tests
(3) Completing and signing the contractor's material and test certificate(s) shown in Figure 10.10.1

10.10.2 Acceptance Requirements.

10.10.2.1* Flushing of Piping.

10.10.2.1.1 Underground piping, from the water supply to the system riser, and lead-in connections to the system riser shall be completely flushed before the connection is made to downstream fire protection system piping.

10.10.2.1.2 The flushing operation shall be continued for a sufficient time to ensure thorough cleaning.

10.10.2.1.3 The minimum rate of flow shall be not less than one of the following:

(1) Hydraulically calculated water demand flow rate of the system, including any hose requirements
(2)*Flow in accordance with Table 10.10.2.1.3
▲ (3) Maximum flow rate available to the system under fire conditions

10.10.2.1.4 Provision shall be made for the proper disposal of water used for flushing or testing.

▲ **10.10.2.2 Hydrostatic Test.**

▲ **10.10.2.2.1*** All piping and attached appurtenances subjected to system working pressure shall be hydrostatically tested at 200 psi (13.8 bar) or 50 psi (3.5 bar) in excess of the system working pressure, whichever is greater, and shall maintain that pressure at ±5 psi (0.35 bar) for 2 hours.

10.10.2.2.2 Pressure loss shall be determined by a drop in gauge pressure or visual leakage.

10.10.2.2.3 The test pressure shall be read from one of the following, located at the lowest elevation of the system or the portion of the system being tested:

(1) A gauge located at one of the hydrant outlets
▲ (2) A gauge located at the lowest point where no hydrants are provided

▲ **10.10.2.2.4*** The trench shall be backfilled between joints before testing to prevent movement of pipe.

10.10.2.2.5 Where required for safety measures presented by the hazards of open trenches, the pipe and joints shall be permitted to be backfilled, provided the installing contractor takes the responsibility for locating and correcting leakage.

▲ **10.10.2.2.6* Hydrostatic Testing Allowance.** Where additional water is added to the system to maintain the test pressures required by 10.10.2.2.1, the amount of water shall be measured and shall not exceed the limits of Table 10.10.2.2.6, which are based upon the following equations:

U.S. Customary Units:

$$L = \frac{SD\sqrt{P}}{148{,}000} \qquad \textbf{[10.10.2.2.6(a)]}$$

where:
L = testing allowance (makeup water) [gph (gal/hr)]
S = length of pipe tested (ft)
D = nominal diameter of pipe (in.)
P = average test pressure during hydrostatic test (gauge psi)

Metric Units:

$$L = \frac{SD\sqrt{P}}{794{,}797} \qquad \textbf{[10.10.2.2.6(b)]}$$

where:
L = testing allowance (makeup water) (L/hr)
S = length of pipe tested (m)
D = nominal diameter of pipe (mm)
P = average test pressure during hydrostatic test (kPa)

10.10.2.3 Other Means of Hydrostatic Tests. Where required by the authority having jurisdiction, hydrostatic tests shall be permitted to be completed in accordance with the requirements of AWWA C600, AWWA C602, AWWA C603, and AWWA C900.

10.10.2.4 Operating Test.

▲ **10.10.2.4.1** Each hydrant shall be fully opened and closed under system water pressure.

▲ **10.10.2.4.2** Dry barrel hydrants shall be checked for proper drainage.

▲ **10.10.2.4.3** All control valves shall be fully closed and opened under system water pressure to ensure proper operation.

10.10.2.4.4 Where fire pumps are available, the operating tests required by 10.10.2.4 shall be completed with the pumps running.

10.10.2.5 Backflow Prevention Assemblies.

10.10.2.5.1 The backflow prevention assembly shall be forward flow tested to ensure proper operation.

▲ **10.10.2.5.2** The minimum flow rate tested in 10.10.2.5.1 shall be the system demand, including hose stream demand where applicable.

Copyright 2013 National Fire Protection Association (NFPA). Licensed, by agreement, for individual use and single download via NFCSS All Access on June 6, 2013 to GATEWAY TECH COLLEGE for designated user 0171780. No other reproduction or transmission in any form permitted without written permission of NFPA. For inquires or to report unauthorized use, contact licensing@nfpa.org. This NFCSS All Access subscription expires on 12/31/2013.

Contractor's Material and Test Certificate for Underground Piping

PROCEDURE

Upon completion of work, inspection and tests shall be made by the contractor's representative and witnessed by an owner's representative. All defects shall be corrected and system left in service before contractor's personnel finally leave the job.

A certificate shall be filled out and signed by both representatives. Copies shall be prepared for approving authorities, owners, and contractor. It is understood the owner's representative's signature in no way prejudices any claim against contractor for faulty material, poor workmanship, or failure to comply with approving authority's requirements or local ordinances.

Property name		Date
Property address		
Plans	Accepted by approving authorities (names)	
	Address	
	Installation conforms to accepted plans	❑ Yes ❑ No
	Equipment used is approved If no, state deviations	❑ Yes ❑ No
Instructions	Has person in charge of fire equipment been instructed as to location of control valves and care and maintenance of this new equipment? If no, explain	❑ Yes ❑ No
	Have copies of appropriate instructions and care and maintenance charts been left on premises? If no, explain	❑ Yes ❑ No
Location	Supplies buildings	
Underground pipes and joints	Pipe types and class	Type joint
	Pipe conforms to _____ standard Fittings conform to _____ standard If no, explain	❑ Yes ❑ No ❑ Yes ❑ No
	Joints needing anchorage clamped, strapped, or blocked in accordance with _____ standard If no, explain	❑ Yes ❑ No
Test description	Flushing: Flow the required rate until water is clear as indicated by no collection of foreign material in burlap bags at outlets such as hydrants and blow-offs. Flush at one of the flow rates as specified in 10.10.2.1.3. Hydrostatic: All piping and attached appurtenances subjected to system working pressure shall be hydrostatically tested at 200 psi (13.8 bar) or 50 psi (3.5 bar) in excess of the system working pressure, whichever is greater, and shall maintain that pressure ±5 psi (0.35 bar) for 2 hours. Hydrostatic Testing Allowance: Where additional water is added to the system to maintain the test pressures required by 10.10.2.2.1, the amount of water shall be measured and shall not exceed the limits of the following equation (for metric equation, see 10.10.2.2.6): $L = \frac{SD\sqrt{P}}{148{,}000}$ L = testing allowance (makeup water), in gallons per hour S = length of pipe tested, in feet D = nominal diameter of the pipe, in inches P = average test pressure during the hydrostatic test, in pounds per square inch (gauge)	
Flushing tests	New underground piping flushed according to _____ standard by (company) If no, explain	❑ Yes ❑ No
	How flushing flow was obtained ❑ Public water ❑ Tank or reservoir ❑ Fire pump	Through what type opening ❑ Hydrant butt ❑ Open pipe
	Lead-ins flushed according to _____ standard by (company) If no, explain	❑ Yes ❑ No
	How flushing flow was obtained ❑ Public water ❑ Tank or reservoir ❑ Fire pump	Through what type opening ❑ Y connection to flange and spigot ❑ Open pipe

© 2012 National Fire Protection Association NFPA 24 (p. 1 of 2)

FIGURE 10.10.1 Sample of Contractor's Material and Test Certificate for Underground Piping.

Copyright 2013 National Fire Protection Association (NFPA). Licensed, by agreement, for individual use and single download via NFCSS All Access on June 6, 2013 to GATEWAY TECH COLLEGE for designated user 0171780. No other reproduction or transmission in any form permitted without written permission of NFPA. For inquires or to report unauthorized use, contact licensing@nfpa.org. This NFCSS All Access subscription expires on 12/31/2013.

Hydrostatic test	All new underground piping hydrostatically tested at _____ psi for _____ hours		Joints covered ❑ Yes ❑ No
Leakage test	Total amount of leakage measured _____ gallons _____ hours		
	Allowable leakage _____ gallons _____ hours		
Forward flow test of backflow preventer	Foward flow test performed in accordance with 10.10.2.5.2:		❑ Yes ❑ No
Hydrants	Number installed	Type and make	All operate satisfactorily ❑ Yes ❑ No
Control valves	Water control valves left wide open If no, state reason		❑ Yes ❑ No
	Hose threads of fire department connections and hydrants interchangeable with those of fire department answering alarm		❑ Yes ❑ No
Remarks	Date left in service		
Signatures	Name of installing contractor		
	Tests witnessed by		
	For property owner (signed)	Title	Date
	For installing contractor (signed)	Title	Date

Additional explanation and notes

© 2012 National Fire Protection Association NFPA 24 (p. 2 of 2)

FIGURE 10.10.1 *Continued*

Copyright 2013 National Fire Protection Association (NFPA). Licensed, by agreement, for individual use and single download via NFCSS All Access on June 6, 2013 to GATEWAY TECH COLLEGE for designated user 0171780. No other reproduction or transmission in any form permitted without written permission of NFPA. For inquires or to report unauthorized use, contact licensing@nfpa.org. This NFCSS All Access subscription expires on 12/31/2013.

Table 10.10.2.1.3 Flow Required to Produce Velocity of 10 ft/sec (3 m/sec) in Pipes

Nominal Pipe Size		Flow Rate	
in.	mm	gpm	L/min
2	51	100	379
2½	63	150	568
3	76	220	833
4	102	390	1,476
5	127	610	2,309
6	152	880	3,331
8	204	1,560	5,905
10	254	2,440	9,235
12	305	3,520	13,323

Table 10.10.2.2.6 Hydrostatic Testing Allowance at 200 psi (gph/100 ft of Pipe)

Nominal Pipe Diameter (in.)	Testing Allowance
2	0.019
4	0.038
6	0.057
8	0.076
10	0.096
12	0.115
14	0.134
16	0.153
18	0.172
20	0.191
24	0.229

Notes:
(1) For other length, diameters, and pressures, utilize Equation 10.10.2.2.6(a) or 10.10.2.2.6(b) to determine the appropriate testing allowance.
(2) For test sections that contain various sizes and sections of pipe, the testing allowance is the sum of the testing allowances for each size and section.

▲ Chapter 11 Hydraulic Calculations

11.1* Calculations in U.S. Customary Units. Pipe friction losses shall be determined based on the Hazen–Williams formula, as follows:

$$p = \frac{4.52Q^{1.85}}{C^{1.85}d^{4.87}}$$

where:
p = frictional resistance (psi/ft of pipe)
Q = flow (gpm)
C = friction loss coefficient
d = actual internal diameter of pipe (in.)

11.2 Calculations in SI Units. Pipe friction losses shall be determined based on the Hazen–Williams formula in SI units, as follows:

$$p_m = 6.05\left(\frac{Q_m^{1.85}}{C^{1.85}d_m^{4.87}}\right)10^5$$

where:
p_m = frictional resistance (bar/m of pipe)
Q_m = flow (L/min)
C = friction loss coefficient
d_m = actual internal diameter of pipe (mm)

Chapter 12 Aboveground Pipe and Fittings

12.1 General. Aboveground pipe and fittings shall comply with the applicable sections of Chapters 6 and 8 of NFPA 13 that address pipe, fittings, joining methods, hangers, and installation.

12.2 Protection of Piping.

12.2.1 Aboveground piping for private fire service mains shall not pass through hazardous areas and shall be located so that it is protected from mechanical and fire damage.

12.2.2 Aboveground piping shall be permitted to be located in hazardous areas protected by an automatic sprinkler system.

12.2.3 Where aboveground water-filled supply pipes, risers, system risers, or feed mains pass through open areas, cold rooms, passageways, or other areas exposed to freezing temperatures, the pipe shall be protected against freezing by the following:

(1) Insulating coverings
(2) Frostproof casings
(3) Other reliable means capable of maintaining a minimum temperature between 40°F and 120°F (4°C and 48.9°C)

12.2.4 Where corrosive conditions exist or piping is exposed to the weather, corrosion-resistant types of pipe, fittings, and hangers or protective corrosion-resistant coatings shall be used.

12.2.5 To minimize or prevent pipe breakage where subject to earthquakes, aboveground pipe shall be protected in accordance with the seismic requirements of NFPA 13.

12.2.6 Mains that pass through walls, floors, and ceilings shall be provided with clearances in accordance with NFPA 13.

Chapter 13 Sizes of Aboveground and Buried Pipe

13.1 Private Service Mains. Pipe smaller than 6 in. (152 mm) in diameter shall not be installed as a private service main supplying hydrants.

13.2 Mains Not Supplying Hydrants. For mains that do not supply hydrants, sizes smaller than 6 in. (152 mm) shall be permitted to be used, subject to the following restrictions:

(1) The main shall supply only the following types of systems:
  (a) Automatic sprinkler systems
  (b) Open sprinkler systems
  (c) Water spray fixed systems
  (d) Foam systems
  (e) Class II standpipe systems

Copyright 2013 National Fire Protection Association (NFPA). Licensed, by agreement, for individual use and single download via NFCSS All Access on June 6, 2013 to GATEWAY TECH COLLEGE for designated user 0171780. No other reproduction or transmission in any form permitted without written permission of NFPA. For inquires or to report unauthorized use, contact licensing@nfpa.org. This NFCSS All Access subscription expires on 12/31/2013.

(2) Hydraulic calculations shall show that the main is able to supply the total demand at the appropriate pressure.
(3) Systems that are not hydraulically calculated shall have a main at least as large as the riser.

13.3 Mains Supplying Fire Protection Systems. The size of private fire service mains supplying fire protection systems shall be approved by the authority having jurisdiction, and the following factors shall be considered:

(1) Construction and occupancy of the plant
(2) Fire flow and pressure of the water required
(3) Adequacy of the water supply

Chapter 14 System Inspection, Testing, and Maintenance

14.1 General. A private fire service main and its appurtenances installed in accordance with this standard shall be properly inspected, tested, and maintained in accordance with NFPA 25 to provide at least the same level of performance and protection as designed.

Annex A Explanatory Material

Annex A is not a part of the requirements of this NFPA document but is included for informational purposes only. This annex contains explanatory material, numbered to correspond with the applicable text paragraphs.

A.3.2.1 Approved. The National Fire Protection Association does not approve, inspect, or certify any installations, procedures, equipment, or materials; nor does it approve or evaluate testing laboratories. In determining the acceptability of installations, procedures, equipment, or materials, the authority having jurisdiction may base acceptance on compliance with NFPA or other appropriate standards. In the absence of such standards, said authority may require evidence of proper installation, procedure, or use. The authority having jurisdiction may also refer to the listings or labeling practices of an organization that is concerned with product evaluations and is thus in a position to determine compliance with appropriate standards for the current production of listed items.

▲ **A.3.2.2 Authority Having Jurisdiction (AHJ).** The phrase "authority having jurisdiction," or its acronym AHJ, is used in NFPA documents in a broad manner, since jurisdictions and approval agencies vary, as do their responsibilities. Where public safety is primary, the authority having jurisdiction may be a federal, state, local, or other regional department or individual such as a fire chief; fire marshal; chief of a fire prevention bureau, labor department, or health department; building official; electrical inspector; or others having statutory authority. For insurance purposes, an insurance inspection department, rating bureau, or other insurance company representative may be the authority having jurisdiction. In many circumstances, the property owner or his or her designated agent assumes the role of the authority having jurisdiction; at government installations, the commanding officer or departmental official may be the authority having jurisdiction.

A.3.2.4 Listed. The means for identifying listed equipment may vary for each organization concerned with product evaluation; some organizations do not recognize equipment as listed unless it is also labeled. The authority having jurisdiction should utilize the system employed by the listing organization to identify a listed product.

A.3.3.10 Pressure-Regulating Device. Examples include pressure-reducing valves, pressure-control valves, and pressure-restricting devices.

▲ **A.3.3.11 Private Fire Service Main.** See Figure A.3.3.11.

A.3.4.1.1 Dry Barrel Hydrant. A drain is located at the bottom of the barrel above the control valve seat for proper drainage after operation.

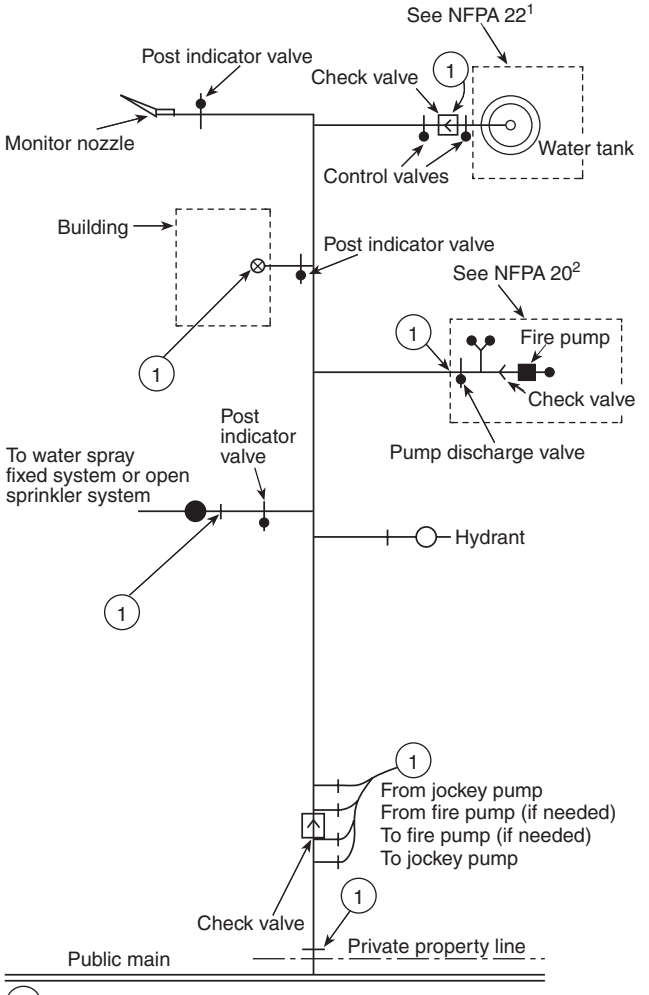

(1) End of private fire service main

Note: The piping (aboveground or buried) shown is specific as to the end of the private fire service main, and this schematic is only for illustrative purposes beyond the end of the fire service main. Details of valves and their location requirements are covered in the specific standard involved.

1. See NFPA 22, *Standard for Water Tanks for Private Fire Protection,* 2008.
2. See NFPA 20, *Standard for the Installation of Stationary Pumps for Fire Protection,* 2013.

FIGURE A.3.3.11 Typical Private Fire Service Main.

Copyright 2013 National Fire Protection Association (NFPA). Licensed, by agreement, for individual use and single download via NFCSS All Access on June 6, 2013 to GATEWAY TECH COLLEGE for designated user 0171780. No other reproduction or transmission in any form permitted without written permission of NFPA. For inquires or to report unauthorized use, contact licensing@nfpa.org. This NFCSS All Access subscription expires on 12/31/2013.

A.3.4.1.3 Private Fire Hydrant. Where connected to a public water system, the private hydrants are supplied by a private service main that begins at the point of service designated by the authority having jurisdiction, usually at a manually operated valve near the property line.

▲ **A.4.1** Underground mains should be designed so that the system can be extended with a minimum of expense. Possible future plant expansion should also be considered and the piping designed so that it is not covered by buildings.

A.5.1 If possible, dead-end mains should be avoided by arranging for mains to be supplied from both directions. Where private fire service mains are connected to dead-end public mains, each situation should be examined to determine if it is practical to request the water utility to loop the mains to obtain a more reliable supply.

▲ **A.5.1.2** An adjustment to the waterflow test data to account for the following should be made, as appropriate:

(1) Daily and seasonal fluctuations
(2) Possible interruption by flood or ice conditions
(3) Large simultaneous industrial use
(4) Future demand on the water supply system
(5) Other conditions that could affect the water supply

A.5.4 Where connections are made from public waterworks systems, such systems should be guarded against possible contamination as follows *(see AWWA M14 or local plumbing code)*:

(1) For private fire service mains with direct connections from public waterworks mains only or with fire pumps installed in the connections from the street mains, no tanks or reservoirs, no physical connection from other water supplies, no antifreeze or other additives of any kind, and with all drains discharging to atmosphere, dry well, or other safe outlets, an approved double check valve assembly is recommended.
(2) For private fire service mains with direct connections from the public water supply main plus one or more elevated storage tanks or fire pumps taking suction from aboveground covered reservoirs or tanks (all storage facilities are filled or connected to public water only, and the water in the tanks is to be maintained in a potable condition), an approved double check valve assembly is recommended.
(3) For private fire service mains directly supplied from public mains with an auxiliary water supply, such as a pond or river on or available to the premises and dedicated to fire department use; or for systems supplied from public mains and interconnected with auxiliary supplies, such as pumps taking suction from reservoirs exposed to contamination or rivers and ponds; driven wells, mills, or other industrial water systems; or for systems or portions of systems where antifreeze or other solutions are used, an approved reduced-pressure zone-type backflow preventer is recommended.

A.5.6 A fire pump installation consisting of pump, driver, and suction supply, when of adequate capacity and reliability and properly located, makes a good supply. An automatically controlled fire pump taking water from a water main of adequate capacity, or taking draft under a head from a reliable storage of adequate capacity, is permitted to be, under certain conditions, accepted by the authority having jurisdiction as a single supply.

A.5.9 The fire department connection should be located not less than 18 in. (457 mm) and not more than 4 ft (1.2 m) above the level of the adjacent grade or access level. Typical fire department connections are shown in Figure A.5.9(a) and Figure A.5.9(b). Where a hydrant is not available, other water supply sources such as a natural body of water, a tank, or a reservoir should be utilized. The water authority should be consulted when a nonpotable water supply is proposed as a suction source for the fire department.

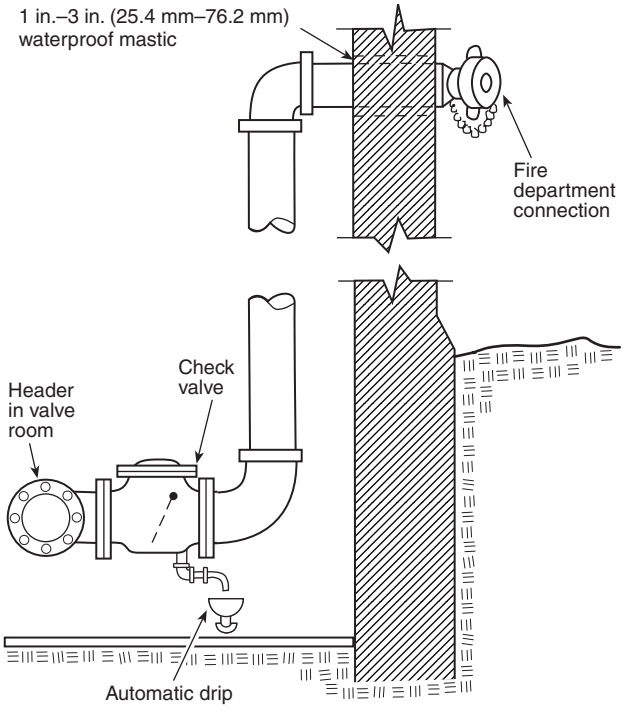

FIGURE A.5.9(a) Typical Fire Department Connection.

A.5.9.5.1 The requirement in 5.9.5.1 applies to fire department connections attached to underground piping. If the fire department connection is attached directly to a system riser, the requirements of the appropriate installation standard apply.

A.5.9.5.2 Obstructions to fire department connections include, but are not limited to, buildings, fences, posts, landscaping, other fire department connections, gas meters, and electrical equipment.

A.5.9.5.3 Where a fire department connection services multiple buildings, structures, or locations, a sign should be provided indicating the buildings, structures, or locations served.

▲ **A.5.9.5.3(2)** Examples for wording of signs are:

AUTOSPKR

OPEN SPKR
AND STANDPIPE

A.6.1.5 A valve wrench with a long handle should be provided at a convenient location on the premises.

A.6.2.5 See Figure A.6.2.5. For additional information on controlling valves, see NFPA 22.

A.6.2.7 For additional information on controlling valves, see NFPA 22.

Copyright 2013 National Fire Protection Association (NFPA). Licensed, by agreement, for individual use and single download via NFCSS All Access on June 6, 2013 to GATEWAY TECH COLLEGE for designated user 0171780. No other reproduction or transmission in any form permitted without written permission of NFPA. For inquires or to report unauthorized use, contact licensing@nfpa.org. This NFCSS All Access subscription expires on 12/31/2013.

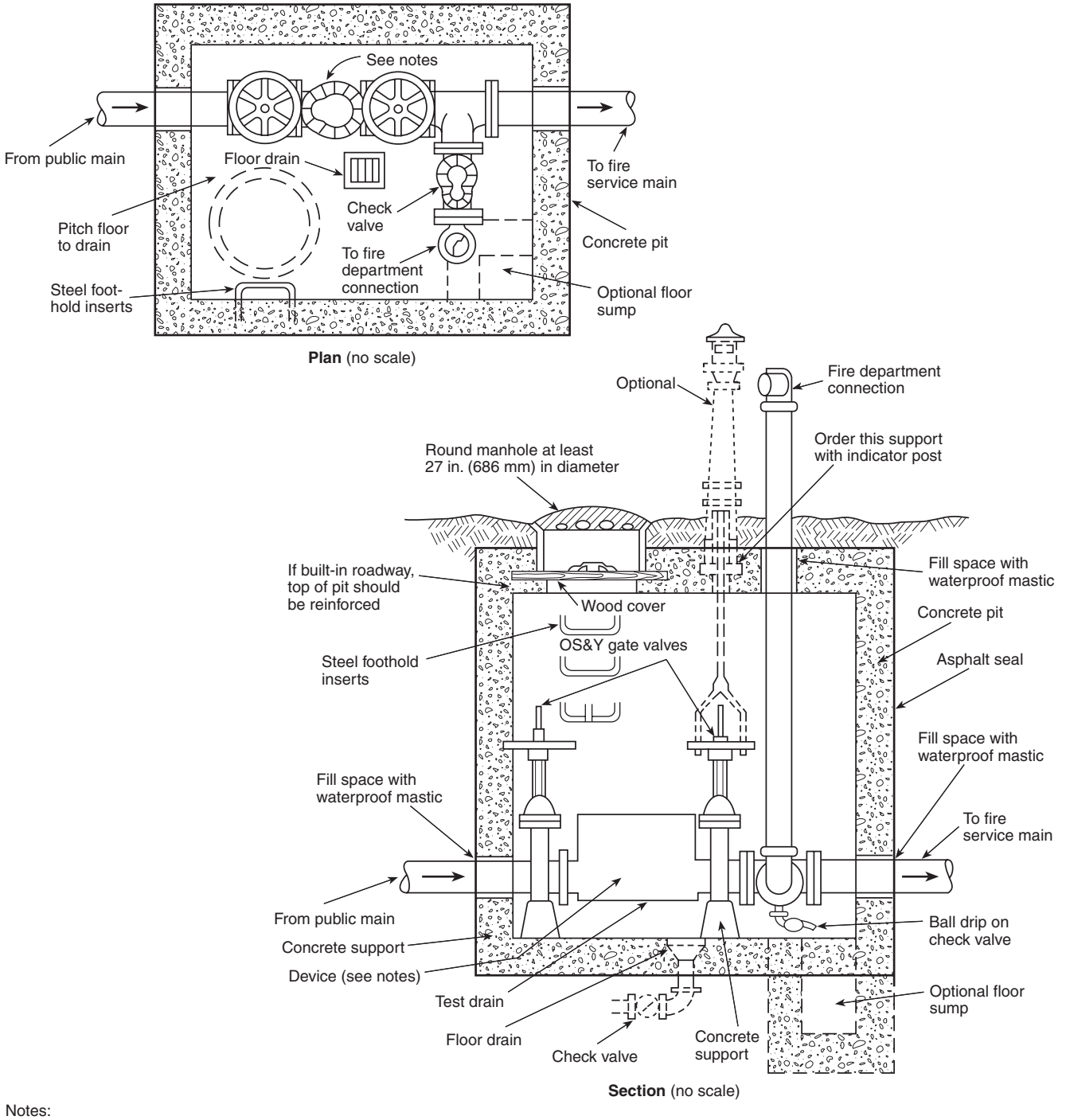

Notes:

1. Various backflow prevention regulations accept different devices at the connection between public water mains and private fire service mains.
2. The device shown in the pit could be any or a combination of the following:
   (a) Gravity check valve
   (b) Detector check valve
   (c) Double check valve assembly
   (d) Reduced-pressure zone (RPZ) device
   (e) Vacuum breaker
3. Some backflow prevention regulations prohibit these devices from being installed in a pit.
4. In all cases, the device(s) in the pit should be approved or listed as necessary. The requirements of the local or municipal water department should be reviewed prior to design or installation of the connection.
5. Pressure drop should be considered prior to the installation of any backflow prevention device.

FIGURE A.5.9(b) Typical City Water Pit — Valve Arrangement.

Copyright 2013 National Fire Protection Association (NFPA). Licensed, by agreement, for individual use and single download via NFCSS All Access on June 6, 2013 to GATEWAY TECH COLLEGE for designated user 0171780. No other reproduction or transmission in any form permitted without written permission of NFPA. For inquires or to report unauthorized use, contact licensing@nfpa.org. This NFCSS All Access subscription expires on 12/31/2013.

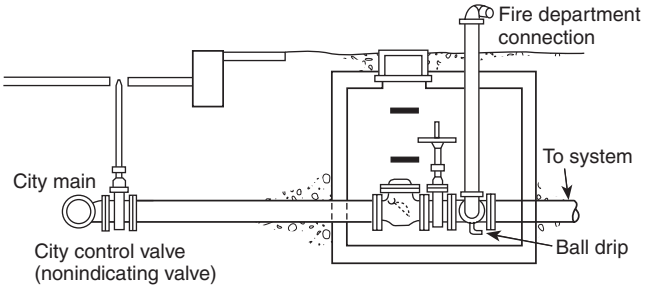

FIGURE A.6.2.5 Pit for Gate Valve, Check Valve, and Fire Department Connection.

A.6.2.8 For additional information on controlling valves, see NFPA 22.

A.6.2.9(1) Where located underground, check valves on tank or pump connections can be placed inside of buildings and at a safe distance from the tank riser or pump, except in cases where the building is entirely of one fire area. Where the building is one fire area, it is ordinarily considered satisfactory to locate the check valve overhead in the lowest level.

A.6.2.10 It might be necessary to provide valves located in pits with an indicator post extending above grade or other means so that the valve can be operated without entering the pit.

A.6.2.11(1) Distances greater than 40 ft (12 m) are not required but can be permitted regardless of the building height.

A.6.2.11(4) Distances greater than 40 ft (12 m) are not required but can be permitted regardless of the building height.

A.6.2.11(5) Distances greater than 40 ft (12 m) are not required but can be permitted regardless of the building height.

A.6.6.1 Sectional valves are necessary to allow isolation of piping sections to limit the number of fire protection connections impaired in event of a break or to make repairs or extensions to the system. Fire protection connections can consist of sprinkler system lead-ins, hydrants, or other fire protection connections.

A.6.7.2 See Annex B.

A.7.1 For information regarding identification and marking of hydrants, see Annex D.

A.7.1.1.2 The flows required for private fire protection service mains are determined by system installation standards or fire codes. The impact of the number and size of hydrant outlets on the fire protection system demand is not addressed in this standard. The appropriate code or standard should be consulted for the requirements for calculating system demand.

A.7.2.1 Fire department pumpers will normally be required to augment the pressure available from public hydrants.

A.7.2.3 Where wall hydrants are used, the authority having jurisdiction should be consulted regarding the necessary water supply and arrangement of control valves at the point of supply in each individual case. *(See Figure A.7.2.3.)*

A.7.3.1 See Figure A.7.3.1(a) and Figure A.7.3.1(b).

A.7.3.3 When setting hydrants, due regard should be given to the final grade line.

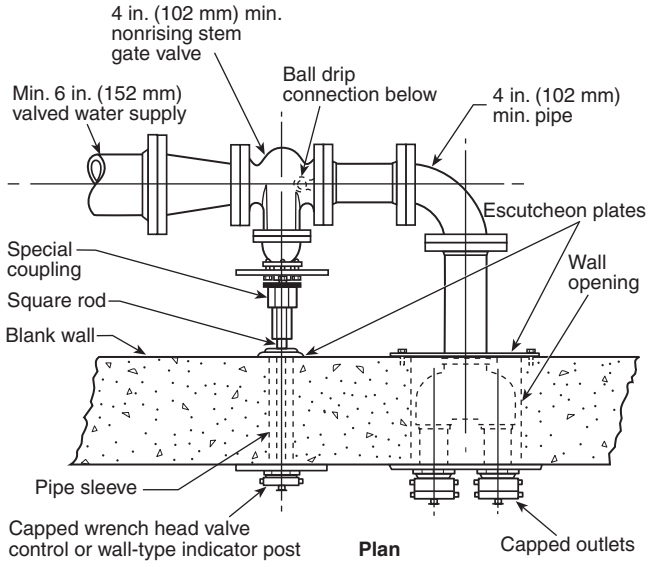

FIGURE A.7.2.3 Typical Wall Fire Hydrant Installation.

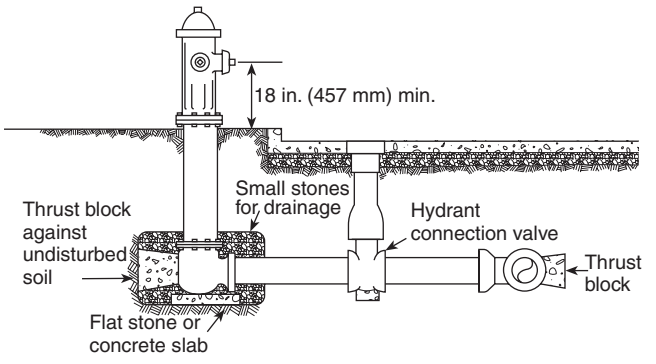

FIGURE A.7.3.1(a) Typical Hydrant Connection with Minimum Height Requirement.

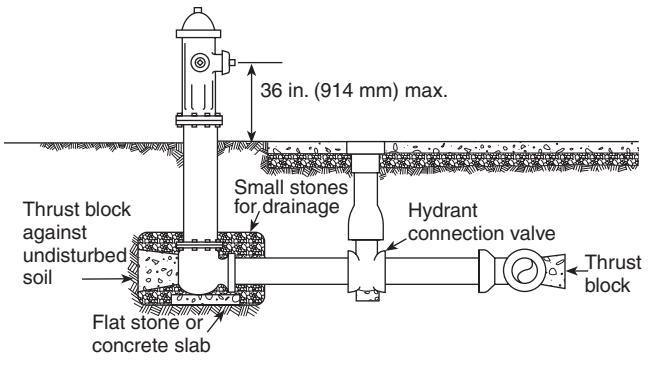

FIGURE A.7.3.1(b) Typical Hydrant Connection with Maximum Height Requirement.

Copyright 2013 National Fire Protection Association (NFPA). Licensed, by agreement, for individual use and single download via NFCSS All Access on June 6, 2013 to GATEWAY TECH COLLEGE for designated user 0171780. No other reproduction or transmission in any form permitted without written permission of NFPA. For inquires or to report unauthorized use, contact licensing@nfpa.org. This NFCSS All Access subscription expires on 12/31/2013.

A.8.1.1 All hose should not be removed from a hose house for testing at the same time, since the time taken to return the hose in case of fire could allow a fire to spread beyond control. *(See NFPA 1962.)*

A.8.1.3 Where hose will be subjected to acids, acid fumes, or other corrosive materials, as in chemical plants, the purchase of approved rubber-covered, rubber-lined hose is advised. For hose used in plant yards containing rough surfaces that cause heavy wear or used where working pressures are above 150 psi (10.3 bar), double-jacketed hose should be considered.

A.8.4 Typical hose houses are shown in Figure A.8.4(a) through Figure A.8.4(c).

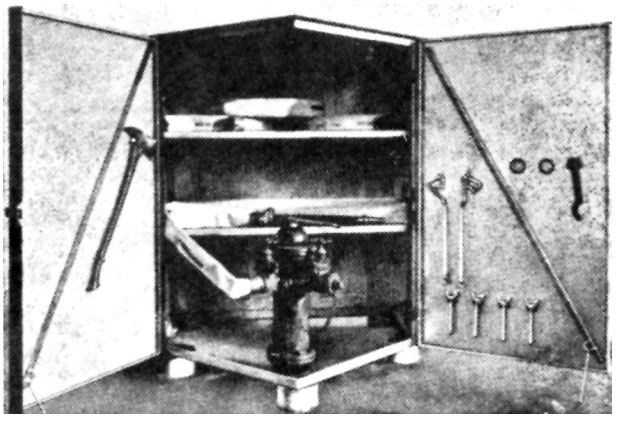

FIGURE A.8.4(a) Hose House of Five-Sided Design for Installation over Private Hydrant.

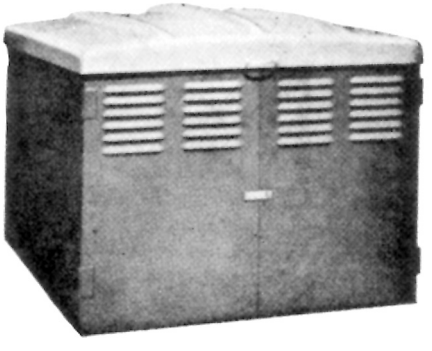

FIGURE A.8.4(b) Closed Steel Hose House of Compact Dimensions for Installation over Private Hydrant, in Which Top Lifts Up and Doors on Front Open for Complete Accessibility.

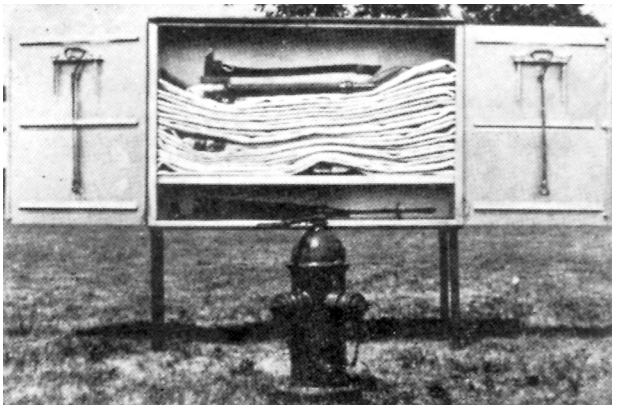

FIGURE A.8.4(c) Hose House That Can Be Installed on Legs, or Installed on Wall Near, but Not Directly Over, Private Hydrant.

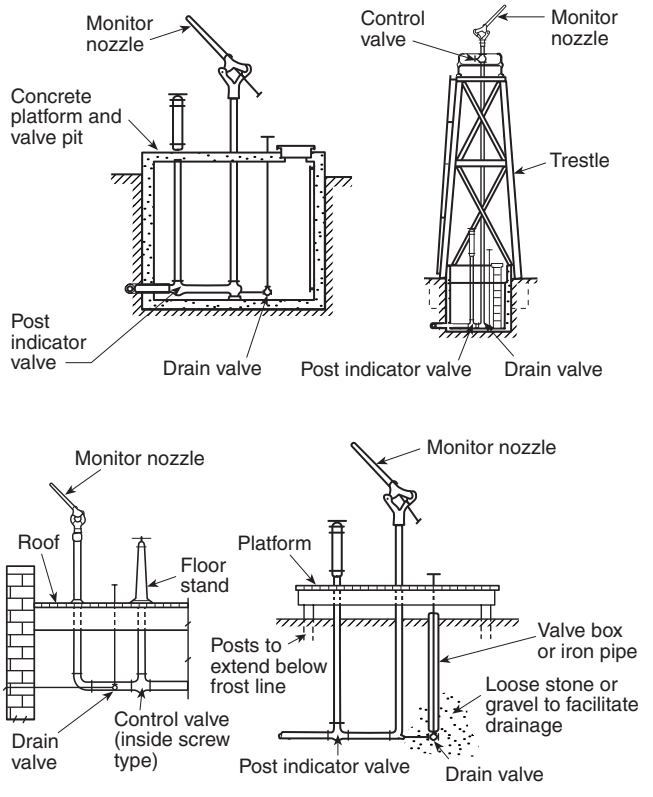

FIGURE A.9.1(a) Standard Monitor Nozzles.

A.8.6.1 All hose should not be removed from a hose house for testing at the same time, since the time taken to return the hose in case of fire could allow a fire to spread beyond control. *(See NFPA 1962.)*

A.9.1 For typical master stream devices, see Figure A.9.1(a) and Figure A.9.1(b). Gear control nozzles are acceptable for use as monitor nozzles.

A.10.1 The term *underground* is intended to mean direct buried piping. For example, piping installed in trenches and tunnels but exposed should be treated as aboveground piping. Loop systems for yard piping are recommended for increased reliability and improved hydraulics. Loop systems should be sectionalized by placing valves at branches and at strategic locations to minimize the extent of impairments.

▲ **A.10.1.1** Copper tubing (Type K) with brazed joints conforming to Table 10.1.1 and Table 10.2.2.1 is acceptable for underground service. Listing and labeling information, along with applicable publications for reference, is as follows:

Copyright 2013 National Fire Protection Association (NFPA). Licensed, by agreement, for individual use and single download via NFCSS All Access on June 6, 2013 to GATEWAY TECH COLLEGE for designated user 0171780. No other reproduction or transmission in any form permitted without written permission of NFPA. For inquires or to report unauthorized use, contact licensing@nfpa.org. This NFCSS All Access subscription expires on 12/31/2013.

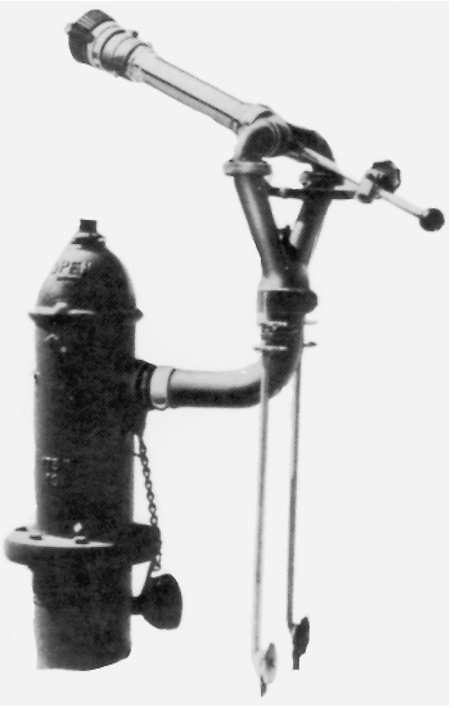

FIGURE A.9.1(b) Typical Hydrant-Mounted Monitor Nozzle.

(1) *Listing and Labeling.* Testing laboratories list or label the following:
   (a) Cast iron and ductile iron pipe (cement-lined and unlined, coated and uncoated)
   (b) Asbestos-cement pipe and couplings
   (c) Steel pipe
   (d) Copper pipe
   (e) Fiberglass filament-wound epoxy pipe and couplings
   (f) Polyethylene pipe
   (g) Polyvinyl chloride (PVC) pipe and couplings
   (h) Underwriters Laboratories Inc. lists, under re-examination service, reinforced concrete pipe (cylinder pipe, nonprestressed and prestressed)

(2) *Pipe Standards.* The various types of pipe are usually manufactured to one of the following standards:
   (a) ASTM C 296, *Standard Specification for Asbestos-Cement Pressure Pipe*
   (b) AWWA C151, *Ductile Iron Pipe, Centrifugally Cast for Water*
   (c) AWWA C300, *Reinforced Concrete Pressure Pipe, Steel-Cylinder Type*
   (d) AWWA C301, *Prestressed Concrete Pressure Pipe, Steel-Cylinder Type*
   (e) AWWA C302, *Reinforced Concrete Pressure Pipe, Non-Cylinder Type*
   (f) AWWA C303, *Reinforced Concrete Pressure Pipe, Steel-Cylinder Type, Pretensioned*
   (g) AWWA C400, *Standard for Asbestos-Cement Distribution Pipe, 4 in. Through 16 in. (100 mm through 400 mm), for Water Distribution Systems*
   (h) AWWA C900, *Polyvinyl Chloride (PVC) Pressure Pipe, 4 in. Through 12 in., for Water Distribution*

A.10.1.4 The following pipe design manuals and standards can be used as guides:

(1) AWWA C150, *Thickness Design of Ductile Iron Pipe*
(2) AWWA C401, *Standard Practice for the Selection of Asbestos-Cement Water Pipe*
(3) AWWA C900, *Polyvinyl Chloride (PVC) Pressure Pipe, 4 in. Through 12 in. for Water Distribution*
(4) AWWA C905, *AWWA Standard for Polyvinyl Chloride (PVC) Pressure Pipe and Fabricated Fittings, 14 in. through 48 in. (350 mm through 1,200 mm)*
(5) AWWA C906, *Standard for Polyethylene (PE) Pressure Pipe and Fittings, 4 in. (100 mm) through 68 in. (1,600 mm), for Water Distribution and Transmission*
(6) AWWA M41, *Ductile Iron Pipe and Fittings*
(7) *Concrete Pipe Handbook*, American Concrete Pipe Association

A.10.1.5 For underground system components, a minimum system pressure rating of 150 psi (10 bar) is specified in 10.1.5, based on satisfactory historical performance. Also, this pressure rating reflects that of the components typically used underground, such as piping, valves, and fittings. Where system pressures are expected to exceed pressures of 150 psi (10.3 bar), system components and materials manufactured and listed for higher pressures should be used. Systems that do not incorporate a fire pump or are not part of a combined standpipe system do not typically experience pressures exceeding 150 psi (10.3 bar) in underground piping. However, each system should be evaluated on an individual basis, because the presence of a fire department connection introduces the possibility of high pressures being applied by fire department apparatus. It is not the intent of this section to include the pressures generated through fire department connections as part of the maximum working pressure.

A.10.1.6 The following standards apply to the application of coating and linings:

(1) AWWA C104, *Cement Mortar Lining for Ductile Iron Pipe and Fittings for Water*
(2) AWWA C105, *Polyethylene Encasement for Ductile Iron Pipe Systems*
(3) AWWA C203, *Coal-Tar Protective Coatings and Linings for Steel Water Pipelines Enamel and Tape — Hot Applied*
(4) AWWA C205, *Cement-Mortar Protective Lining and Coating for Steel Water Pipe 4 in. and Larger — Shop Applied*
(5) AWWA C602, *Cement-Mortar Lining of Water Pipe Lines 4 in. and Larger — in Place*
(6) AWWA C116, *Protective Fusion-Bonded Epoxy Coatings for the Interior and Exterior Surfaces of Ductile-Iron and Gray-Iron Fittings for Water Supply Service*

For internal diameters of cement-lined ductile iron pipe, see Table A.10.1.6.

A.10.2.1 Fittings generally used are cast iron with joints made to the specifications of the manufacturer of the particular type of pipe *(see the standards listed in A.10.3.1)*. Steel fittings also have some applications. The following standards apply to fittings:

(1) ASME B16.1, *Cast Iron Pipe Flanges and Flanged Fittings*
(2) AWWA C110, *Ductile Iron and Gray Iron Fittings, 3-in. Through 48-in., for Water and Other Liquids*
(3) AWWA C153, *Ductile Iron Compact Fittings, 3 in. through 24 in. and 54 in. through 64 in. for Water Service*
(4) AWWA C208, *Dimensions for Fabricated Steel Water Pipe Fittings*

Copyright 2013 National Fire Protection Association (NFPA). Licensed, by agreement, for individual use and single download via NFCSS All Access on June 6, 2013 to GATEWAY TECH COLLEGE for designated user 0171780. No other reproduction or transmission in any form permitted without written permission of NFPA. For inquires or to report unauthorized use, contact licensing@nfpa.org. This NFCSS All Access subscription expires on 12/31/2013.

Table A.10.1.6 Internal Diameters (IDs) for Cement-Lined Ductile Iron Pipe

Pipe Size (in.)	OD (in.)	Pressure Class	Thickness Class	Wall Thickness	Minimum Lining Thickness*	ID (in.) with Lining
3	3.96	350		0.25	1/16	3.34
3	3.96		51	0.25	1/16	3.34
3	3.96		52	0.28	1/16	3.28
3	3.96		53	0.31	1/16	3.22
3	3.96		54	0.34	1/16	3.16
3	3.96		55	0.37	1/16	3.10
3	3.96		56	0.40	1/16	3.04
4	4.80	350		0.25	1/16	4.18
4	4.80		51	0.26	1/16	4.16
4	4.80		52	0.29	1/16	4.10
4	4.80		53	0.32	1/16	4.04
4	4.80		54	0.35	1/16	3.98
4	4.80		55	0.38	1/16	3.92
4	4.80		56	0.41	1/16	3.86
6	6.90	350		0.25	1/16	6.28
6	6.90		50	0.25	1/16	6.28
6	6.90		51	0.28	1/16	6.22
6	6.90		52	0.31	1/16	6.16
6	6.90		53	0.34	1/16	6.10
6	6.90		54	0.37	1/16	6.04
6	6.90		55	0.40	1/16	5.98
6	6.90		56	0.43	1/16	5.92
8	9.05	350		0.25	1/16	8.43
8	9.05		50	0.27	1/16	8.39
8	9.05		51	0.30	1/16	8.33
8	9.05		52	0.33	1/16	8.27
8	9.05		53	0.36	1/16	8.21
8	9.05		54	0.39	1/16	8.15
8	9.05		55	0.42	1/16	8.09
8	9.05		56	0.45	1/16	8.03
10	11.10	350		0.26	1/16	10.46
10	11.10		50	0.29	1/16	10.40
10	11.10		51	0.32	1/16	10.34
10	11.10		52	0.35	1/16	10.28
10	11.10		53	0.38	1/16	10.22
10	11.10		54	0.41	1/16	10.16
10	11.10		55	0.44	1/16	10.10
10	11.10		56	0.47	1/16	10.04
12	13.20	350		0.28	1/16	12.52
12	13.20		50	0.31	1/16	12.46
12	13.20		51	0.34	1/16	12.40
12	13.20		52	0.37	1/16	12.34
12	13.20		53	0.40	1/16	12.28
12	13.20		54	0.43	1/16	12.22
12	13.20		55	0.46	1/16	12.16
12	13.20		56	0.49	1/16	12.10
14	15.30	250		0.28	3/32	14.55
14	15.30	300		0.30	3/32	14.51
14	15.30	350		0.31	3/32	14.49
14	15.30		50	0.33	3/32	14.45
14	15.30		51	0.36	3/32	14.39
14	15.30		52	0.39	3/32	14.33
14	15.30		53	0.42	3/32	14.27

(continues)

Copyright 2013 National Fire Protection Association (NFPA). Licensed, by agreement, for individual use and single download via NFCSS All Access on June 6, 2013 to GATEWAY TECH COLLEGE for designated user 0171780. No other reproduction or transmission in any form permitted without written permission of NFPA. For inquires or to report unauthorized use, contact licensing@nfpa.org. This NFCSS All Access subscription expires on 12/31/2013.

Table A.10.1.6 *Continued*

Pipe Size (in.)	OD (in.)	Pressure Class	Thickness Class	Wall Thickness	Minimum Lining Thickness*	ID (in.) with Lining
14	15.30		54	0.45	3/32	14.21
14	15.30		55	0.48	3/32	14.15
14	15.30		56	0.51	3/32	14.09
16	17.40	250		0.30	3/32	16.61
16	17.40	300		0.32	3/32	16.57
16	17.40	350		0.34	3/32	16.53
16	17.40		50	0.34	3/32	16.53
16	17.40		51	0.37	3/32	16.47
16	17.40		52	0.40	3/32	16.41
16	17.40		53	0.43	3/32	16.35
16	17.40		54	0.46	3/32	16.29
16	17.40		55	0.49	3/32	16.23
16	17.40		56	0.52	3/32	16.17
18	19.50	250		0.31	3/32	18.69
18	19.50	300		0.34	3/32	18.63
18	19.50	350		0.36	3/32	18.59
18	19.50		50	0.35	3/32	18.61
18	19.50		51	0.35	3/32	18.61
18	19.50		52	0.41	3/32	18.49
18	19.50		53	0.44	3/32	18.43
18	19.50		54	0.47	3/32	18.37
18	19.50		55	0.50	3/32	18.31
18	19.50		56	0.53	3/32	18.25
20	21.60	250		0.33	3/32	20.75
20	21.60	300		0.36	3/32	20.69
20	21.60	350		0.38	3/32	20.65
20	21.60		50	0.36	3/32	20.69
20	21.60		51	0.39	3/32	20.63
20	21.60		52	0.42	3/32	20.57
20	21.60		53	0.45	3/32	20.51
20	21.60		54	0.48	3/32	20.45
20	21.60		55	0.51	3/32	20.39
20	21.60		56	0.54	3/32	20.33
24	25.80	200		0.33	3/32	24.95
24	25.80	250		0.37	3/32	24.87
24	25.80	300		0.40	3/32	24.81
24	25.80	350		0.43	3/32	24.75
24	25.80		50	0.38	3/32	24.85
24	25.80		51	0.41	3/32	24.79
24	25.80		52	0.44	3/32	24.73
24	25.80		53	0.47	3/32	24.67
24	25.80		54	0.50	3/32	24.61
24	25.80		55	0.53	3/32	24.55
24	25.80		56	0.56	3/32	24.49

ID: Internal diameter; OD: Outside diameter.

*Note: This table is appropriate for single lining thickness only. The actual lining thickness should be obtained from the manufacturer.

Copyright 2013 National Fire Protection Association (NFPA). Licensed, by agreement, for individual use and single download via NFCSS All Access on June 6, 2013 to GATEWAY TECH COLLEGE for designated user 0171780. No other reproduction or transmission in any form permitted without written permission of NFPA. For inquires or to report unauthorized use, contact licensing@nfpa.org. This NFCSS All Access subscription expires on 12/31/2013.

A.10.3.1 The following standards apply to joints used with the various types of pipe:

(1) ASME B16.1, *Cast Iron Pipe Flanges and Flanged Fittings*
(2) AWWA C111, *Rubber-Gasket Joints for Ductile Iron Pressure Pipe and Fittings*
(3) AWWA C115, *Flanged Ductile Iron Pipe with Ductile Iron or Gray Iron Threaded Flanges*
(4) AWWA C206, *Field Welding of Steel Water Pipe*
(5) AWWA C606, *Grooved and Shouldered Joints*

A.10.3.3 Fittings and couplings are listed for specific pipe materials that can be installed underground. Fittings and couplings do not necessarily indicate that they are listed specifically for underground use.

A.10.3.6.2 It is not necessary to coat mechanical joint fittings or epoxy-coated valves and glands.

A.10.4.1 The following documents apply to the installation of pipe and fittings:

(1) AWWA C603, *Standard for the Installation of Asbestos-Cement Pressure Pipe*
(2) AWWA C600, *Standard for the Installation of Ductile-Iron Water Mains and Their Appurtenances*
(3) AWWA M11, *A Guide for Steel Pipe Design and Installation*
(4) AWWA M41, *Ductile Iron Pipe and Fittings*
(5) *Concrete Pipe Handbook*, American Concrete Pipe Association
(6) *Handbook of PVC Pipe*, Uni-Bell PVC Pipe Association
(7) *Installation Guide for Ductile Iron Pipe*, Ductile Iron Pipe Research Association
(8) *Thrust Restraint Design for Ductile Iron Pipe*, Ductile Iron Pipe Research Association

As there is normally no circulation of water in private fire mains, they require greater depth of covering than do public mains. Greater depth is required in a loose gravelly soil (or in rock) than in compact soil containing large quantities of clay. The recommended depth of cover above the top of underground yard mains is shown in Figure A.10.4.1.

A.10.5.1 In determining the need to protect aboveground piping from freezing, the lowest mean temperature should be considered as shown in Figure A.10.5.1.

A.10.6.3.1 Items such as sidewalks or patios should not be included as they are no different from roadways. See Figure A.10.6.3.1.

A.10.6.4 The individual piping standards should be followed for load and bury depth, accounting for the load and stresses imposed by the building foundation.

Figure A.10.6.4 shows location where pipe joints would be prohibited.

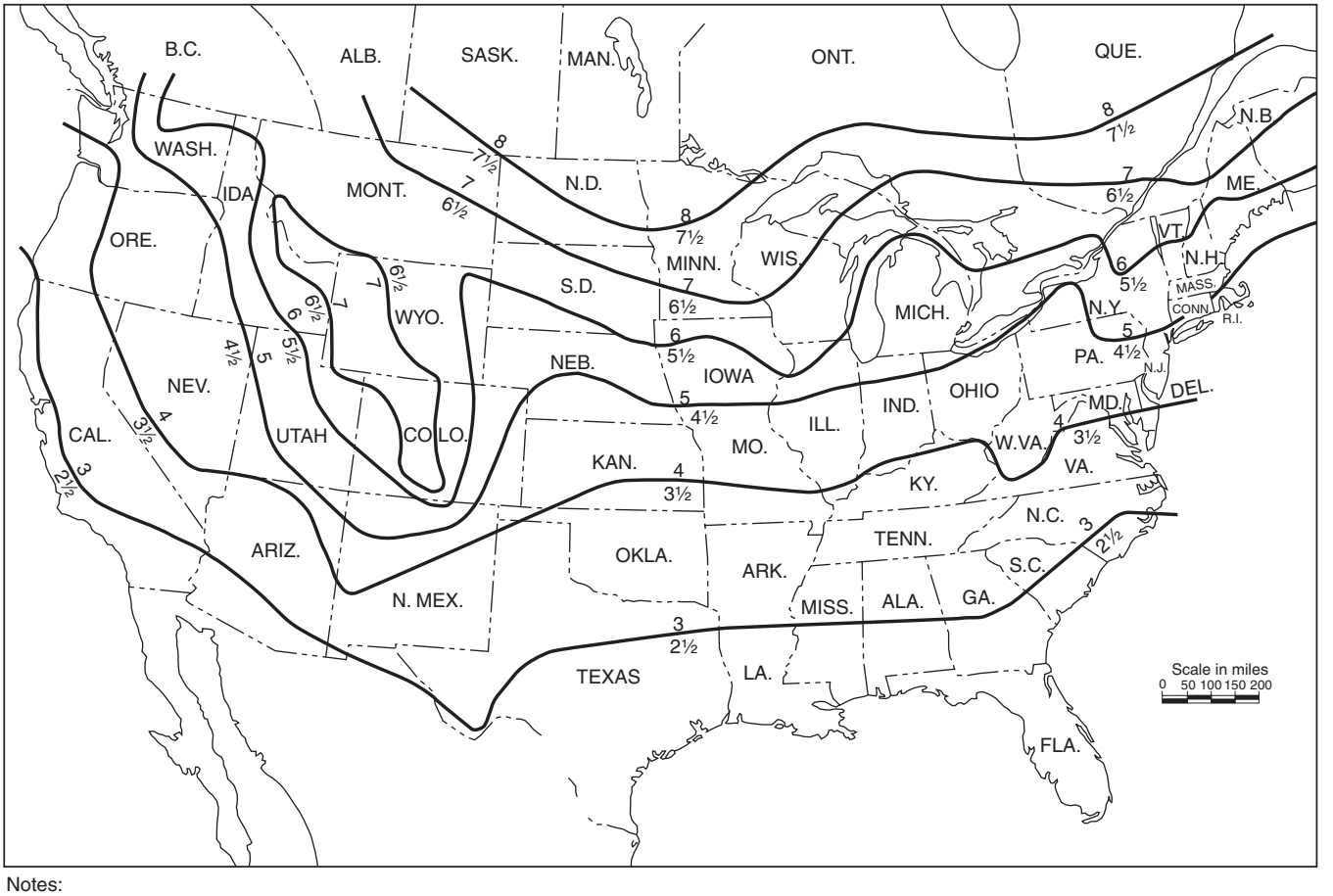

Notes:
1. For SI Units, 1 in. = 25.4 mm; 1 ft = 0.304 m.
2. Where frost penetration is a factor, the depth of cover shown averages 6 in. greater than that usually provided by the municipal waterworks. Greater depth is needed because of the absence of flow in yard mains.

FIGURE A.10.4.1 Recommended Depth of Cover (in feet) Above Top of Underground Yard Mains.

Copyright 2013 National Fire Protection Association (NFPA). Licensed, by agreement, for individual use and single download via NFCSS All Access on June 6, 2013 to GATEWAY TECH COLLEGE for designated user 0171780. No other reproduction or transmission in any form permitted without written permission of NFPA. For inquires or to report unauthorized use, contact licensing@nfpa.org. This NFCSS All Access subscription expires on 12/31/2013.

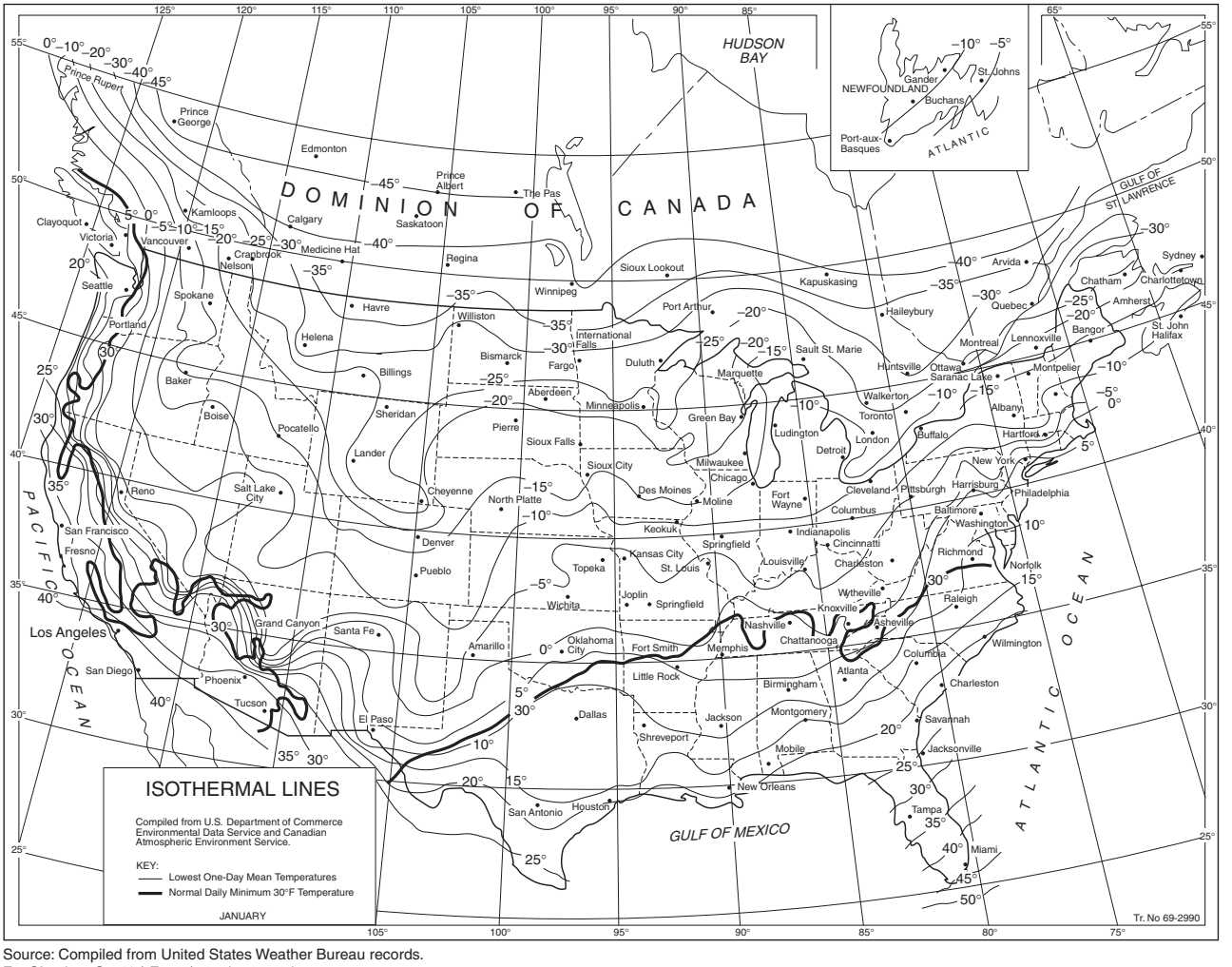

Source: Compiled from United States Weather Bureau records.
For SI units, °C = ⅝ (°F −32); 1 mi = 1.609 km.

FIGURE A.10.5.1 Isothermal Lines — Lowest One-Day Mean Temperature (°F).

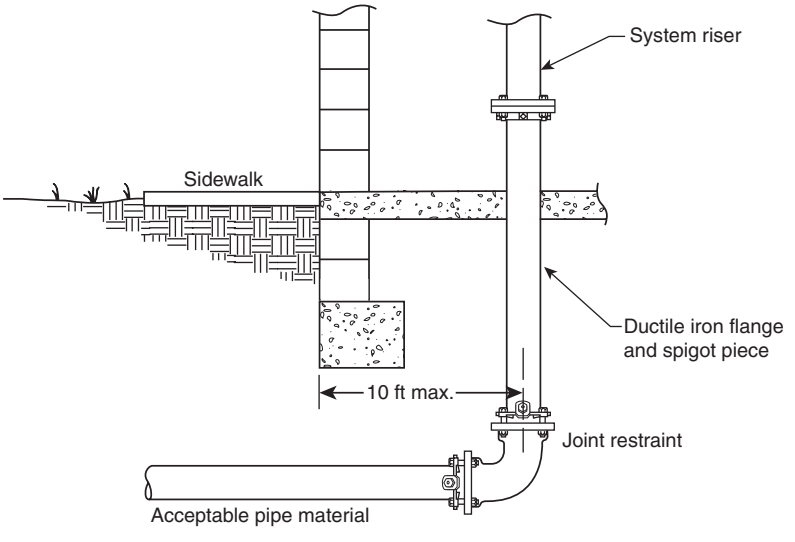

FIGURE A.10.6.3.1 Riser Entrance Location.

Copyright 2013 National Fire Protection Association (NFPA). Licensed, by agreement, for individual use and single download via NFCSS All Access on June 6, 2013 to GATEWAY TECH COLLEGE for designated user 0171780. No other reproduction or transmission in any form permitted without written permission of NFPA. For inquires or to report unauthorized use, contact licensing@nfpa.org. This NFCSS All Access subscription expires on 12/31/2013.

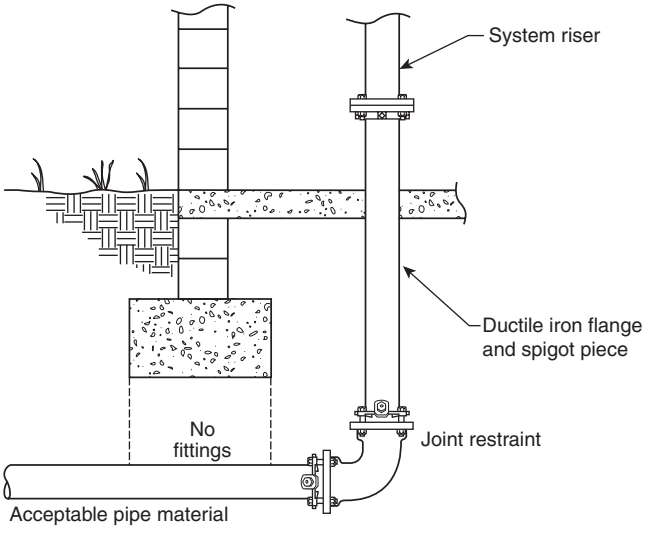

FIGURE A.10.6.4 Pipe Joint Location in Relation to Foundation Footings.

A.10.6.5 Sufficient clearance should be provided when piping passes beneath foundations or footers. See Figure A.10.6.5.

A.10.6.7 Gray cast iron is not considered galvanically dissimilar to ductile iron. Rubber gasket joints (unrestrained push-on or mechanical joints) are not considered connected electrically. Metal thickness should not be considered a protection against corrosive environments. In the case of cast iron or ductile iron pipe for soil evaluation and external protection systems, see Appendix A of AWWA C105.

A.10.6.8 Where lightning protection is provided for a structure, NFPA 780, Section 4.14, requires that all grounding media, including underground metallic piping systems, be interconnected to provide common ground potential. These underground piping systems are not permitted to be substituted for grounding electrodes but must be bonded to the lightning protection grounding system. Where galvanic corrosion is of concern, this bond can be made via a spark gap or gas discharge tube.

A.10.6.8.1 While the use of the underground fire protection piping as the grounding electrode for the building is prohibited, *NFPA 70* requires that all metallic piping systems be bonded and grounded to disperse stray electrical currents. Therefore, the fire protection piping will be bonded to other metallic systems and grounded, but the electrical system will need an additional ground for its operation.

A.10.8.1.1 It is a fundamental design principle of fluid mechanics that dynamic and static pressures, acting at changes in size or direction of a pipe, produce unbalanced thrust forces at locations such as bends, tees, wyes, dead ends, and reducer offsets. This design principle includes consideration of lateral soil pressure and pipe/soil friction, variables that can be reliably determined using current soil engineering knowledge. Refer to A.10.8.3 for a list of references for use in calculating and determining joint restraint systems.

Except for the case of welded joints and approved special restrained joints, such as is provided by approved mechanical joint retainer glands or locked mechanical and push-on joints, the usual joints for underground pipe are expected to be held in place by the soil in which the pipe is buried. Gasketed push-on and mechanical joints without special locking devices have limited ability to resist separation due to movement of the pipe.

A.10.8.1.2 Solvent-cemented and heat-fused joints such as those used with CPVC piping and fittings are considered restrained. They do not require thrust blocks.

▲ **A.10.8.2** Concrete thrust blocks are one of the methods of restraint now in use, provided that stable soil conditions prevail and space requirements permit placement. Successful blocking is dependent upon factors such as location, availability and placement of concrete, and possibility of disturbance by future excavations.

Resistance is provided by transferring the thrust force to the soil through the larger bearing area of the block such that the resultant pressure against the soil does not exceed the horizontal bearing strength of the soil. The design of thrust

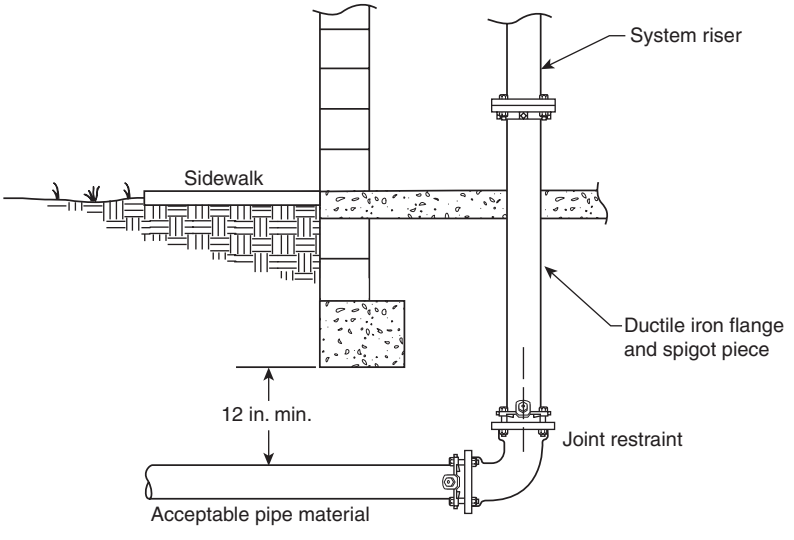

FIGURE A.10.6.5 Piping Clearance from Foundation.

Copyright 2013 National Fire Protection Association (NFPA). Licensed, by agreement, for individual use and single download via NFCSS All Access on June 6, 2013 to GATEWAY TECH COLLEGE for designated user 0171780. No other reproduction or transmission in any form permitted without written permission of NFPA. For inquires or to report unauthorized use, contact licensing@nfpa.org. This NFCSS All Access subscription expires on 12/31/2013.

blocks consists of determining the appropriate bearing area of the block for a particular set of conditions. The parameters involved in the design include pipe size, design pressure, angle of the bend (or configuration of the fitting involved), and the horizontal bearing strength of the soil.

Table A.10.8.2(a) gives the nominal thrust at fittings for various sizes of ductile iron and PVC piping. Figure A.10.8.2(a) shows an example of how thrust forces act on a piping bend.

Thrust blocks are generally categorized into two groups — bearing and gravity blocks. Figure A.10.8.2(b) depicts a typical bearing thrust block on a horizontal bend.

The following are general criteria for bearing block design:

(1) The bearing surface should, where possible, be placed against undisturbed soil.
(2) Where it is not possible to place the bearing surface against undisturbed soil, the fill between the bearing surface and undisturbed soil must be compacted to at least 90 percent Standard Proctor density.
(3) Block height (h) should be equal to or less than one-half the total depth to the bottom of the block (H_t) but not less than the pipe diameter (D).
(4) Block height (h) should be chosen such that the calculated block width (b) varies between one and two times the height.
(5) Gravity thrust blocks can be used to resist thrust at vertical down bends. In a gravity thrust block, the weight of the block is the force providing equilibrium with the thrust force. The design problem is then to calculate the required volume of the thrust block of a known density. The vertical component of the thrust force in Figure A.10.8.2(c) is balanced by the weight of the block. For required horizontal bearing block areas, see Table A.10.8.2(b).

The required block area (A_b) is as follows:

$$A_b = (h)(b) = \frac{T(S_f)}{S_b}$$

where:
A_b = required block area (ft^2)
h = block height (ft)
b = calculated block width (ft)
T = thrust force (lbf)
S_f = safety factor (usually 1.5)
S_b = bearing strength (lb/ft^2)

Then, for a horizontal bend, the following formula is used:

$$b = \frac{2(S_f)(P)(A)\sin\left(\frac{\theta}{2}\right)}{(h)(S_b)}$$

where:
b = calculated block width (ft)
S_f = safety factor (usually 1.5 for thrust block design)
P = water pressure (lb/in.^{2})
A = cross-sectional area of pipe based on outside diameter
h = block height (ft)
S_b = horizontal bearing strength of soil (lb/ft^2) (in.^{2})

A similar approach can be used to design bearing blocks to resist the thrust forces at locations such as tees and dead ends. Typical values for conservative horizontal bearing strengths of various soil types are listed in Table A.10.8.2(c).

In lieu of the values for soil bearing strength shown in Table A.10.8.2(c), a designer might choose to use calculated Rankine passive pressure (P_p) or other determination of soil bearing strength based on actual soil properties.

Table A.10.8.2(a) Thrust at Fittings at 100 psi (6.9 bar) Water Pressure for Ductile Iron and PVC Pipe

Nominal Pipe Diameter (in.)	Total Pounds					
	Dead End	90-Degree Bend	45-Degree Bend	22½-Degree Bend	11¼-Degree Bend	5⅛-Degree Bend
4	1,810	2,559	1,385	706	355	162
6	3,739	5,288	2,862	1,459	733	334
8	6,433	9,097	4,923	2,510	1,261	575
10	9,677	13,685	7,406	3,776	1,897	865
12	13,685	19,353	10,474	5,340	2,683	1,224
14	18,385	26,001	14,072	7,174	3,604	1,644
16	23,779	33,628	18,199	9,278	4,661	2,126
18	29,865	42,235	22,858	11,653	5,855	2,670
20	36,644	51,822	28,046	14,298	7,183	3,277
24	52,279	73,934	40,013	20,398	10,249	4,675
30	80,425	113,738	61,554	31,380	15,766	7,191
36	115,209	162,931	88,177	44,952	22,585	10,302
42	155,528	219,950	119,036	60,684	30,489	13,907
48	202,683	286,637	155,127	79,083	39,733	18,124

Notes:
(1) For SI units, 1 lb = 0.454 kg; 1 in. = 25.4 mm.
(2) To determine thrust at pressure other than 100 psi (6.9 bar), multiply the thrust obtained in the table by the ratio of the pressure to 100 psi (6.9 bar). For example, the thrust on a 12 in. (305 mm), 90-degree bend at 125 psi (8.6 bar) is 19,353 × 125/100 = 24,191 lb (10,973 kg).

Copyright 2013 National Fire Protection Association (NFPA). Licensed, by agreement, for individual use and single download via NFCSS All Access on June 6, 2013 to GATEWAY TECH COLLEGE for designated user 0171780. No other reproduction or transmission in any form permitted without written permission of NFPA. For inquires or to report unauthorized use, contact licensing@nfpa.org. This NFCSS All Access subscription expires on 12/31/2013.

Table A.10.8.2(b) Required Horizontal Bearing Block Area

Nominal Pipe Diameter (in.)	Bearing Block Area (ft^2)	Nominal Pipe Diameter (in.)	Bearing Block Area (ft^2)	Nominal Pipe Diameter (in.)	Bearing Block Area (ft^2)
3	2.6	12	29.0	24	110.9
4	3.8	14	39.0	30	170.6
6	7.9	16	50.4	36	244.4
8	13.6	18	63.3	42	329.9
10	20.5	20	77.7	48	430.0

Notes:

(1) Although the bearing strength values in this table have been used successfully in the design of thrust blocks and are considered to be conservative, their accuracy is totally dependent on accurate soil identification and evaluation. The ultimate responsibility for selecting the proper bearing strength of a particular soil type must rest with the design engineer.

(2) Values listed are based on a 90-degree horizontal bend, an internal pressure of 100 psi, a soil horizontal bearing strength of 1000 lb/ft^2, a safety factor of 1.5, and ductile iron pipe outside diameters.

(a) For other horizontal bends, multiply by the following coefficients: for 45 degrees, 0.541; for 22½ degrees, 0.276; for 11¼ degrees, 0.139.

(b) For other internal pressures, multiply by ratio to 100 psi.

(c) For other soil horizontal bearing strengths, divide by ratio to 1000 lb/ft^2.

(d) For other safety factors, multiply by ratio to 1.5.

Example: Using Table A.10.8.2(b), find the horizontal bearing block area for a 6 in. diameter, 45–degree bend with an internal pressure of 150 psi. The soil bearing strength is 3000 lb/ft^2, and the safety factor is 1.5.

From Table A.10.8.2(b), the required bearing block area for a 6 in. diameter, 90-degree bend with an internal pressure of 100 psi and a soil horizontal bearing strength of 1000 psi is 7.9 ft^2.

For example:

$$Area = \frac{7.9\ ft^2\,(0.541)\left(\frac{150}{100}\right)}{\left(\frac{3000}{1000}\right)} = 2.1\ ft^2$$

Table A.10.8.2(c) Horizontal Bearing Strengths

Soil	Bearing Strength (S_b) lb/ft^2	Bearing Strength (S_b) kN/m^2
Muck	0	0
Soft clay	1000	47.9
Silt	1500	71.8
Sandy silt	3000	143.6
Sand	4000	191.5
Sand clay	6000	287.3
Hard clay	9000	430.9

Note: Although the bearing strength values in this table have been used successfully in the design of thrust blocks and are considered to be conservative, their accuracy is totally dependent on accurate soil identification and evaluation. The ultimate responsibility for selecting the proper bearing strength of a particular soil type must rest with the design engineer.

It can be easily shown that $T_y = PA \sin \theta$. The required volume of the block is as follows:

$$V_g = \frac{S_f PA \sin \theta}{W_m}$$

where:

V_g = block volume (ft^3)
S_f = safety factor
P = water pressure (psi)
A = cross-sectional area of pipe interior
W_m = density of block material (lb/ft^3)

In a case such as the one shown, the horizontal component of thrust force is calculated as follows:

$$T_x = PA(1 - \cos \theta)$$

where:

T_x = horizontal component of thrust force
P = water pressure (psi)
A = cross-sectional area of pipe interior

The horizontal component of thrust force must be resisted by the bearing of the right side of the block against the soil. Analysis of this aspect follows the same principles as the previous section on bearing blocks.

A.10.8.3 A method for providing thrust restraint is the use of restrained joints. A restrained joint is a special type of joint that is designed to provide longitudinal restraint. Restrained joint systems function in a manner similar to that of thrust blocks, insofar as the reaction of the entire restrained unit of piping with the soil balances the thrust forces.

Copyright 2013 National Fire Protection Association (NFPA). Licensed, by agreement, for individual use and single download via NFCSS All Access on June 6, 2013 to GATEWAY TECH COLLEGE for designated user 0171780. No other reproduction or transmission in any form permitted without written permission of NFPA. For inquires or to report unauthorized use, contact licensing@nfpa.org. This NFCSS All Access subscription expires on 12/31/2013.

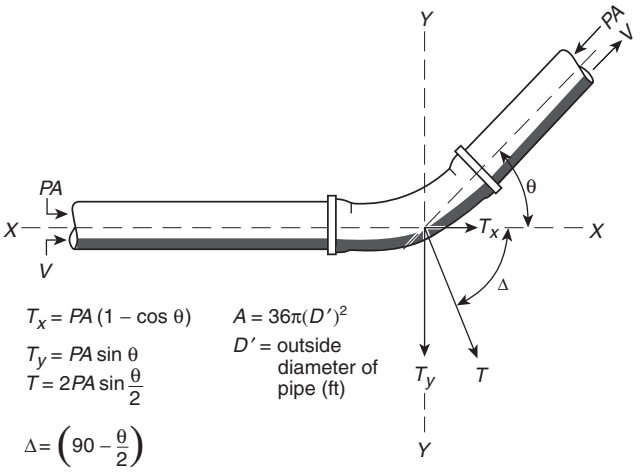

T = thrust force resulting from change in direction of flow (lbf)
T_x = component of thrust force acting parallel to original direction of flow (lbf)
T_y = component of thrust force acting perpendicular to original direction of flow (lbf)
P = water pressure (psi^2)
A = cross-sectional area of pipe based on outside diameter (in.^{2})
V = velocity in direction of flow

FIGURE A.10.8.2(a) Thrust Forces Acting on Bend.

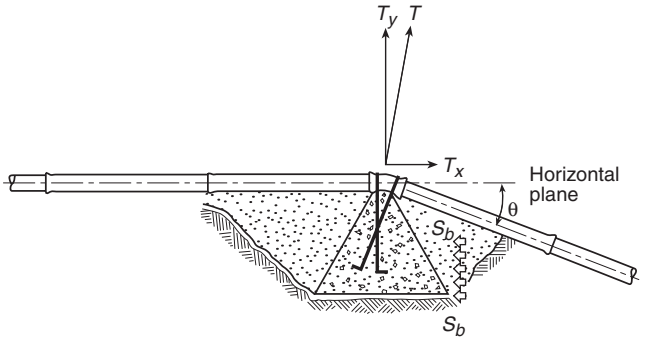

T = thrust force resulting from change of direction of flow
T_x = horizontal component of thrust force
T_y = vertical component of thrust force
S_b = horizontal bearing strength of soil

FIGURE A.10.8.2(c) Gravity Thrust Block.

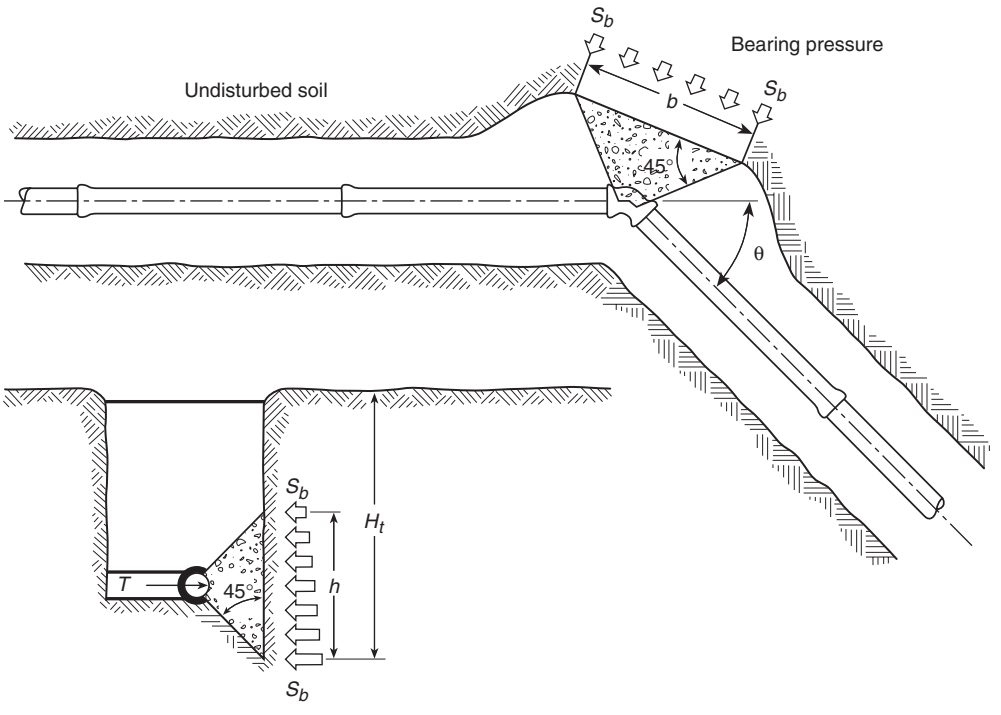

T = thrust force resulting from change in direction of flow
S_b = horizontal bearing strength of soil
h = block height
H_t = total depth to bottom of block

FIGURE A.10.8.2(b) Bearing Thrust Block.

Copyright 2013 National Fire Protection Association (NFPA). Licensed, by agreement, for individual use and single download via NFCSS All Access on June 6, 2013 to GATEWAY TECH COLLEGE for designated user 0171780. No other reproduction or transmission in any form permitted without written permission of NFPA. For inquires or to report unauthorized use, contact licensing@nfpa.org. This NFCSS All Access subscription expires on 12/31/2013.

The objective in designing a restrained joint thrust restraint system is to determine the length of pipe that must be restrained on each side of the focus of the thrust force. This will be a function of the pipe size, the internal pressure, the depth of cover, and the characteristics of the solid surrounding the pipe.

The following documents apply to the design, calculation, and determination of restrained joint systems:

(1) *Thrust Restraint Design for Ductile Iron Pipe*, Ductile Iron Pipe Research Association
(2) AWWA M41, *Ductile Iron Pipe and Fittings*
(3) AWWA M9, *Concrete Pressure Pipe*
(4) AWWA M11, *A Guide for Steel Pipe Design and Installation*
(5) *Thrust Restraint Design Equations and Tables for Ductile Iron and PVC Pipe*, EBAA Iron, Inc.

Figure A.10.8.3 shows an example of a typical connection to a fire protection system riser utilizing restrained joint pipe.

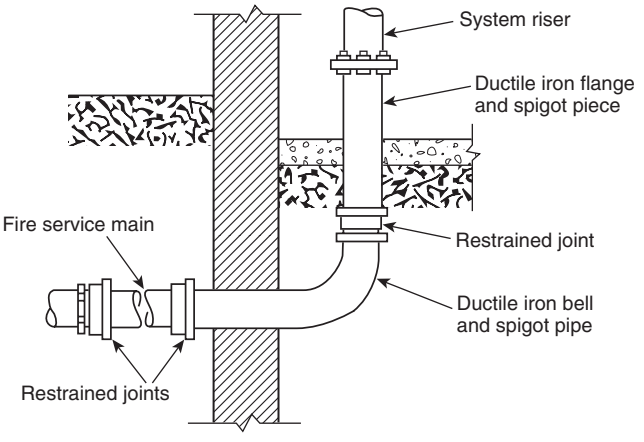

FIGURE A.10.8.3 Typical Connection to Fire Protection System Riser Illustrating Restrained Joints.

A.10.8.3.5 Examples of materials and the standards covering these materials are as follows:

(1) Clamps, steel *(see discussion on steel in the following paragraph)*
(2) Rods, steel *(see discussion on steel in the following paragraph)*
(3) Bolts, steel (ASTM A 307)
(4) Washers, steel *(see discussion on steel in the following paragraph)*; cast iron (Class A cast iron as defined by ASTM A 126)
(5) Anchor straps and plug straps, steel *(see discussion on steel in the following paragraph)*
(6) Rod couplings or turnbuckles, malleable iron (ASTM A 197)

Steel of modified range merchant quality as defined in U.S. Federal Standard No. 66C, April 18, 1967, change notice No. 2, April 16, 1970, as promulgated by the U.S. Federal Government General Services Administration.

The materials specified in A.10.8.3.5(1) through (6) do not preclude the use of other materials that also satisfy the requirements of this section.

A.10.10.2.1 Underground mains and lead-in connections to system risers should be flushed through hydrants at dead ends of the system or through accessible aboveground flushing outlets allowing the water to run until clear. Figure A.10.10.2.1 shows acceptable examples of flushing the system. If water is supplied from more than one source or from a looped system, divisional valves should be closed to produce a high-velocity flow through each single line. The flows specified in Table 10.10.2.1.3 will produce a velocity of at least 10 ft/sec (3 m/sec), which is necessary for cleaning the pipe and for lifting foreign material to an aboveground flushing outlet.

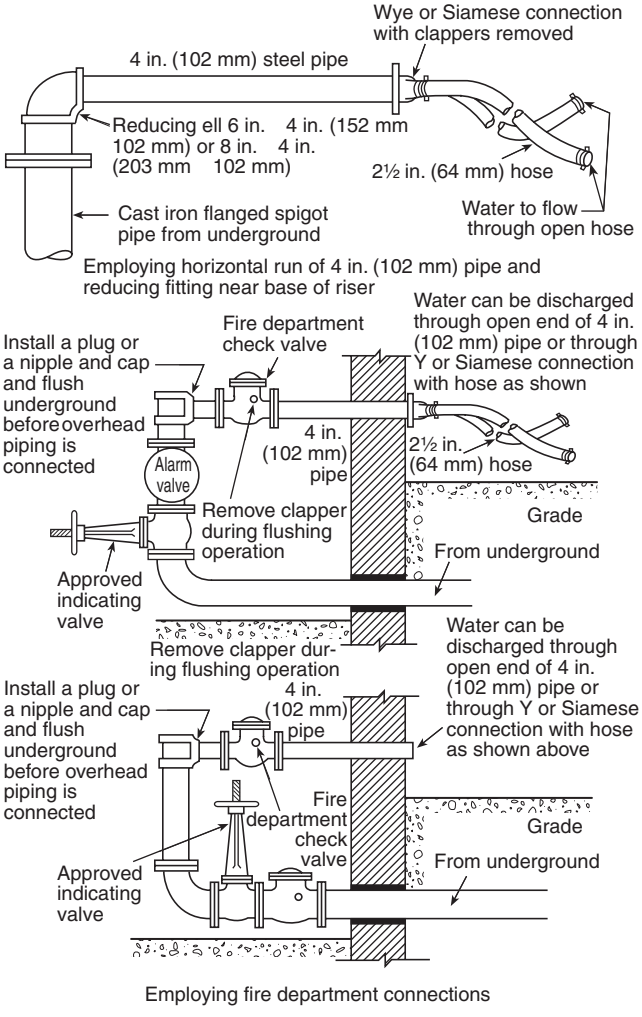

FIGURE A.10.10.2.1 Methods of Flushing Water Supply Connections.

A.10.10.2.1.3(2) The velocity of approximately 10 ft/sec (3.1 m/sec) was used to develop Table 10.10.2.1.3 because this velocity has been shown to be sufficient for moving obstructive material out of the pipes. It is not important that the velocity equal exactly 10 ft/sec (3.1 m/sec), so there is no reason to increase the flow during the test for slightly different internal pipe dimensions. Note that where underground pipe serves as suction pipe for a fire pump, NFPA 20 requires greater flows for flushing the pipe.

A.10.10.2.2.1 A sprinkler system has for its water supply a connection to a public water service main. A 100 psi (6.9 bar) rated pump is installed in the connection. With a maximum

Copyright 2013 National Fire Protection Association (NFPA). Licensed, by agreement, for individual use and single download via NFCSS All Access on June 6, 2013 to GATEWAY TECH COLLEGE for designated user 0171780. No other reproduction or transmission in any form permitted without written permission of NFPA. For inquires or to report unauthorized use, contact licensing@nfpa.org. This NFCSS All Access subscription expires on 12/31/2013.

normal public water supply of 70 psi (4.8 bar), at the low elevation point of the individual system or portion of the system being tested and a 120 psi (8.3 bar) pump (churn) pressure, the hydrostatic test pressure is 70 psi (4.8 bar) + 120 psi (8.3 bar) + 50 psi (3.5 bar), or 240 psi (16.5 bar).

To reduce the possibility of serious water damage in case of a break, pressure can be maintained by a small pump, the main controlling gate meanwhile being kept shut during the test.

Polybutylene pipe will undergo expansion during initial pressurization. In this case, a reduction in gauge pressure might not necessarily indicate a leak. The pressure reduction should not exceed the manufacturer's specifications and listing criteria.

When systems having rigid thermoplastic piping such as CPVC are pressure tested, the sprinkler system should be filled with water. The air should be bled from the highest and farthest sprinklers. Compressed air or compressed gas should never be used to test systems with rigid thermoplastic pipe.

A recommended test procedure is as follows: The water pressure is to be increased in 50 psi (3.5 bar) increments until the test pressure described in 10.10.2.2.1 is attained. After each increase in pressure, observations are to be made of the stability of the joints. These observations are to include such items as protrusion or extrusion of the gasket, leakage, or other factors likely to affect the continued use of a pipe in service. During the test, the pressure is not to be increased by the next increment until the joint has become stable. This applies particularly to movement of the gasket. After the pressure has been increased to the required maximum value and held for 1 hour, the pressure is to be decreased to 0 psi while observations are made for leakage. The pressure is again to be slowly increased to the value specified in 10.10.2.2.1 and held for 1 more hour while observations are made for leakage and the leakage measurement is made.

A.10.10.2.2.4 Hydrostatic tests should be made before the joints are covered, so that any leaks can be detected. Thrust blocks should be sufficiently hardened before hydrostatic testing is begun. If the joints are covered with backfill prior to testing, the contractor remains responsible for locating and correcting any leakage in excess of that permitted.

A.10.10.2.2.6 One acceptable means of completing this test is to utilize a pressure pump that draws its water supply from a full container. At the completion of the 2-hour test, the amount of water to refill the container can be measured to determine the amount of makeup water. In order to minimize pressure loss, the piping should be flushed to remove any trapped air. Additionally, the piping should be pressurized for 1 day prior to the hydrostatic test to account for expansion, absorption, entrapped air, and so on.

The use of a blind flange or skillet is preferred for hydrostatically testing segments of new work. Metal-seated valves are susceptible to developing slight imperfections during transport, installation, and operation and thus can be likely to leak more than 1 fl oz/in. (1.2 mL/mm) of valve diameter per hour. For this reason, the blind flange should be used when hydrostatically testing.

A.11.1 When calculating the actual inside diameter of cement mortar–lined pipe, twice the thickness of the pipe wall and twice the thickness of the lining need to be subtracted from the outside diameter of the pipe. The actual lining thickness should be obtained from the manufacturer.

Table A.11.1(a) and Table A.11.1(b) indicate the minimum lining thickness.

Table A.11.1(a) Minimum Thickness of Lining for Ductile Iron Pipe and Fittings

Pipe and Fitting Size		Thickness of Lining	
in.	mm	in.	mm
3–12	76–305	1/16	1.6
14–24	356–610	3/32	2.4
30–64	762–1600	1/8	3.2

Source: AWWA C104.

Table A.11.1(b) Minimum Thickness of Lining for Steel Pipe

Nominal Pipe Size		Thickness of Lining		Tolerance	
in.	mm	in.	mm	in.	mm
4–10	100–250	1/4	6	−1/16, +1/8	−1.6, +3.2
11–23	280–580	5/16	8	−1/16, +1/8	−1.6, +3.2
24–36	600–900	3/8	10	−1/16, +1/8	−1.6, +3.2
>36	>900	1/2	13	−1/16, +3/16	−1.6, +4.8

Source: AWWA C205.

Annex B Valve Supervision Issues

This annex is not a part of the requirements of this NFPA document but is included for informational purposes only.

B.1 Responsibility. The management is responsible for the supervision of valves controlling the water supply for fire protection and should exert every effort to see that the valves are maintained in the normally open position. This effort includes special precautions to ensure that protection is promptly restored by completely opening valves that are necessarily closed during repairs or alterations. The precautions apply equally to the following:

(1) Valves controlling sprinklers and other fixed water-based fire suppression systems
(2) Hydrants
(3) Tanks
(4) Standpipes
(5) Pumps
(6) Street connections
(7) Sectional valves

Central station supervisory service systems or proprietary supervisory service systems, or a combination of these methods of valve supervision, as described in the following paragraphs, are considered essential to ensure that the valves controlling fire protection systems are in the normally open position. The methods described are intended as an aid to the person responsible for developing a systematic method of determining that the valves controlling sprinkler systems and other fire protection devices are open.

Continual vigilance is necessary if valves are to be kept in the open position. Responsible day and night employees should be familiar with the location of all valves and their proper use.

Copyright 2013 National Fire Protection Association (NFPA). Licensed, by agreement, for individual use and single download via NFCSS All Access on June 6, 2013 to GATEWAY TECH COLLEGE for designated user 0171780. No other reproduction or transmission in any form permitted without written permission of NFPA. For inquires or to report unauthorized use, contact licensing@nfpa.org. This NFCSS All Access subscription expires on 12/31/2013.

The authority having jurisdiction should be consulted as to the type of valve supervision required. Contracts for equipment should specify that all details are to be subject to the approval of the authority having jurisdiction.

B.2 Central Station Supervisory Service Systems. Central station supervisory service systems involve complete, constant, and automatic supervision of valves by electrically operated devices and circuits. The devices and circuits are continually under test and operate through an approved outside central station in compliance with *NFPA 72*. It is understood that only the portions of *NFPA 72* that relate to valve supervision should apply.

B.3 Proprietary Supervisory Service Systems. Proprietary supervisory service systems include systems in which the operation of a valve produces some form of signal and record at a common point by electrically operated devices and circuits. The device and circuits are continually under test and operate through a central supervising station at the protected property in compliance with the standards for the installation, maintenance, and use of local protective, auxiliary protective, remote-station protective, and proprietary signaling systems. It is understood that only the portions of the standards that relate to valve supervision should apply.

B.4 Locking and Sealing. The standard method of locking, sealing, and tagging valves to prevent, as far as possible, their unnecessary closing, to obtain notification of such closing, and to aid in restoring the valve to normal condition is a satisfactory alternative to valve supervision. The authority having jurisdiction should be consulted for details for specific cases.

Where electrical supervision is not provided, locks or seals should be provided on all valves and should be of a type acceptable to the authority having jurisdiction.

Seals can be marked to indicate the organization under whose jurisdiction the sealing is conducted. All seals should be attached to the valve in such a manner that the valves cannot be operated without breaking the seals. Seals should be of a character that prevents injury in handling and that prevents reassembly when broken. Where seals are used, valves should be inspected weekly. The authority having jurisdiction can require a valve tag to be used in conjunction with the sealing.

A padlock, with a chain where necessary, is especially desirable to prevent unauthorized closing of valves in areas where valves are subject to tampering. Where such locks are employed, valves should be inspected monthly.

If valves are locked, any distribution of keys should be restricted to only those directly responsible for the fire protection system. Multiple valves should not be locked together; they should be individually locked.

The individual performing inspections should determine that each valve is in the normal position and properly locked or sealed, and so noted on an appropriate record form while still at the valve. The authority having jurisdiction should be consulted for assistance in preparing a suitable report form for this activity.

Identification signs should be provided at each valve to indicate its function and what it controls.

The position of the spindle of OS&Y valves or the target on the indicator valves cannot be accepted as conclusive proof that the valve is fully open. The opening of the valve should be followed by a test to determine that the operating parts have functioned properly.

The test consists of opening the main drain valve and allowing a free flow of water until the gauge reading becomes stationary. If the pressure drop is excessive for the water supply involved, the cause should be determined immediately and the proper remedies taken. Where sectional valves or other special conditions are encountered, other methods of testing should be used.

If it becomes necessary to break a seal for emergency reasons, the valve, following the emergency, should be opened by the individual responsible for the fire protection of the plant or his or her designated representative. The responsible individual should apply a seal at the time of the valve opening. The seal should be maintained in place until such time as the authority having jurisdiction can replace it with a seal of its own.

Seals or locks should not be applied to valves that have been reopened after closure until such time as the inspection procedure is carried out.

Where water is shut off to the sprinkler or other fixed water-based fire suppression systems, a guard or other qualified person should be placed on duty and required to continuously patrol the affected sections of the premises until such time as protection is restored.

During specific critical situations, a responsible individual should be stationed at the valve so that the valve can be reopened promptly if necessary. It is the intent of this recommendation that the individual remain within sight of the valve and have no additional duties. This recommendation is considered imperative when fire protection is shut off immediately following a fire.

An inspection of all other fire protection equipment should be made prior to shutting off water in order to ensure that it is in operative condition.

Where changes to fire protection equipment are to be made, as much work as possible should be done in advance of shutting off the water, so that final connections can be made quickly and protection restored promptly. With careful planning, open outlets often can be plugged and protection can be restored on a portion of the equipment while the alterations are being made.

Where changes are to be made in underground piping, as much piping as possible should be laid before shutting off the water for final connections. Where possible, temporary feed lines, such as temporary piping for reconnection of risers by hose lines, should be used to afford maximum protection. The plant, public fire department, and other authorities having jurisdiction should be notified of all impairments to fire protection equipment.

▲ Annex C Recommended Practice for Fire Flow Testing

This annex is not a part of the requirements of this NFPA document but is included for informational purposes only.

C.1 Annex C was developed based upon the procedures contained in the 2010 edition of NFPA 291. For additional information on fire flow testing, see NFPA 291, 2010 edition, Chapter 4, "Flow Testing."

C.1.1 Scope. The scope of this annex is to provide guidance on fire flow testing of hydrants.

Copyright 2013 National Fire Protection Association (NFPA). Licensed, by agreement, for individual use and single download via NFCSS All Access on June 6, 2013 to GATEWAY TECH COLLEGE for designated user 0171780. No other reproduction or transmission in any form permitted without written permission of NFPA. For inquires or to report unauthorized use, contact licensing@nfpa.org. This NFCSS All Access subscription expires on 12/31/2013.

C.1.2 Purpose. Fire flow tests are conducted on water distribution systems to determine the rate of flow available at various locations for fire-fighting purposes.

C.1.3 Application.

C.1.3.1 A certain residual pressure in the mains is specified at which the rate of flow should be available.

C.1.3.2 Additional benefit is derived from fire flow tests by the indication of possible deficiencies, such as tuberculation of piping or closed valves or both, which could be corrected to ensure adequate fire flows as needed.

C.1.4 Units. Metric units of measurement in this recommended practice are in accordance with the modernized metric system known as the International System of Units (SI). Two units (liter and bar), outside of but recognized by SI, are commonly used in international fire protection. These units are listed in Table C.1.4 with conversion factors.

Table C.1.4 SI Units and Conversion Factors

Unit Name	Unit Symbol	Conversion Factor
Liter	L	1 gal = 3.785 L
Liter per minute per square meter	$(L/min)/m^2$	1 gpm ft^2 = (40.746 $L/min)/m^2$
Cubic decimeter	dm^3	1 gal = 3.785 dm^3
Pascal	Pa	1 psi = 6894.757 Pa
Bar	bar	1 psi = 0.0689 bar
Bar	bar	1 bar = 10^5 Pa

Note: For additional conversions and information, see IEEE/ASTM-SI-10.

C.1.4.1 If a value for measurement as given in this recommended practice is followed by an equivalent value in other units, the first value stated is to be regarded as the recommendation. A given equivalent value might be approximate.

C.2 Referenced Publications.

C.2.1 The documents or portions thereof listed in this annex are referenced within this annex and should be considered part of the recommendations of this document.

C.2.2 NFPA Publications. (Reserved)

C.2.3 Other Publications.

C.2.3.1 ASTM Publications. ASTM International, 100 Barr Harbor Drive, P.O. Box C700, West Conshohocken, PA 19428-2959.

IEEE/ASTM-SI-10, *Standard for Use of the International System of Units (SI): The Modern Metric System*, 2002.

C.3 Definitions.

C.3.1 The definitions contained in this annex apply to the terms used in this annex practice. Where terms are not included, common usage of the terms applies.

C.3.2 NFPA Official Definitions.

C.3.2.1 Authority Having Jurisdiction (AHJ). An organization, office, or individual responsible for enforcing the requirements of a code or standard, or for approving equipment, materials, an installation, or a procedure. *(See A.3.2.2.)*

C.3.2.2 Listed. Equipment, materials, or services included in a list published by an organization that is acceptable to the authority having jurisdiction and concerned with evaluation of products or services, that maintains periodic inspection of production of listed equipment or materials or periodic evaluation of services, and whose listing states that either the equipment, material, or service meets appropriate designated standards or has been tested and found suitable for a specified purpose. *(See A.3.2.4.)*

C.3.2.3 Should. Indicates a recommendation or that which is advised but not required.

C.3.3 General Definitions.

C.3.3.1 Rated Capacity. The flow available from a hydrant at the designated residual pressure (rated pressure) either measured or calculated.

C.3.3.2 Residual Pressure. The pressure that exists in the distribution system, measured at the residual hydrant at the time the flow readings are taken at the flow hydrants.

C.3.3.3 Static Pressure. The pressure that exists at a given point under normal distribution system conditions measured at the residual hydrant with no hydrants flowing.

C.4 Flow Testing.

C.4.1 Rating Pressure.

C.4.1.1 For the purpose of uniform marking of fire hydrants, the ratings should be based on a residual pressure of 20 psi (1.4 bar) for all hydrants having a static pressure in excess of 40 psi (2.8 bar).

C.4.1.2 Hydrants having a static pressure of less than 40 psi (2.8 bar) should be rated at one-half of the static pressure.

▲ **C.4.1.3** It is generally recommended that a minimum residual pressure of 20 psi (1.4 bar) should be maintained at hydrants when delivering the fire flow. Fire department pumpers can be operated where hydrant pressures are less, but with difficulty.

C.4.1.4 Where hydrants are well distributed and of the proper size and type (so that friction losses in the hydrant and suction line are not excessive), it might be possible to set a lesser pressure as the minimum pressure.

C.4.1.5 A primary concern should be the ability to maintain sufficient residual pressure to prevent developing a negative pressure at any point in the street mains, which could result in the collapse of the mains or other water system components or back-siphonage of polluted water from some other interconnected source.

C.4.1.6 It should be noted that the use of residual pressures of less than 20 psi (1.4 bar) is not permitted by many state health departments.

C.4.2 Test Procedure.

▲ **C.4.2.1** Tests should be made during a period of ordinary demand.

C.4.2.2 The procedure consists of discharging water at a measured rate of flow from the system at a given location and observing the corresponding pressure drop in the mains.

C.4.3 Test Layout.

C.4.3.1 After the location where the test is to be run has been determined, a group of test hydrants in the vicinity is selected.

Copyright 2013 National Fire Protection Association (NFPA). Licensed, by agreement, for individual use and single download via NFCSS All Access on June 6, 2013 to GATEWAY TECH COLLEGE for designated user 0171780. No other reproduction or transmission in any form permitted without written permission of NFPA. For inquires or to report unauthorized use, contact licensing@nfpa.org. This NFCSS All Access subscription expires on 12/31/2013.

▲ **C.4.3.2** Once selected, due consideration should be given to potential interference with traffic flow patterns, damage to surroundings (e.g., roadways, sidewalks, landscapes, vehicles, and pedestrians), and potential flooding problems both local and remote from the test site.

▲ **C.4.3.3** One hydrant, designated the residual hydrant, is chosen to be the hydrant where the normal static pressure will be observed with the other hydrants in the group closed, and where the residual pressure will be observed with the other hydrants flowing.

▲ **C.4.3.4** This hydrant is chosen so it will be located between the hydrant to be flowed and the large mains that constitute the immediate sources of water supply in the area. In Figure C.4.3.4, test layouts are indicated showing the residual hydrant designated with the letter R and hydrants to be flowed with the letter F.

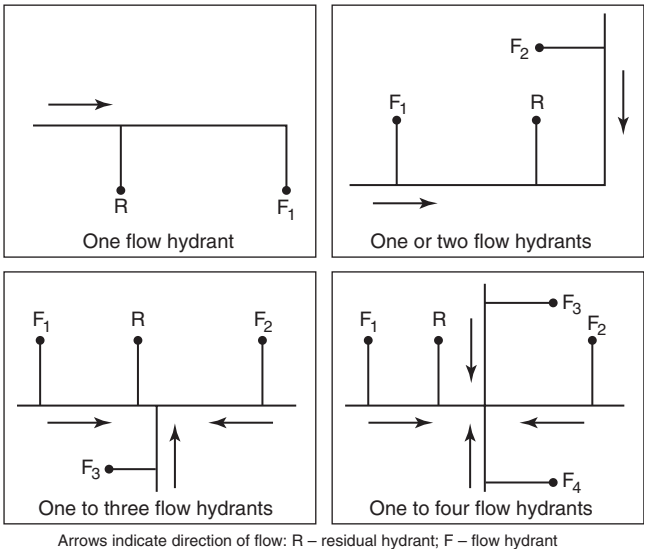

Arrows indicate direction of flow: R – residual hydrant; F – flow hydrant

FIGURE C.4.3.4 Suggested Test Layout for Hydrants.

C.4.3.5 The number of hydrants to be used in any test depends upon the strength of the distribution system in the vicinity of the test location.

▲ **C.4.3.6** To obtain satisfactory test results of theoretical calculation of expected flows or rated capacities, sufficient discharge should be achieved to cause a drop in pressure at the residual hydrant of at least 25 percent, or to flow the total demand necessary for fire-fighting purposes.

C.4.3.7 If the mains are small and the system weak, only one or two hydrants need to be flowed.

C.4.3.8 If, on the other hand, the mains are large and the system strong, it might be necessary to flow as many as seven or eight hydrants.

C.4.4 Equipment.

C.4.4.1 The equipment necessary for field work consists of the following:

(1) A single 200 psi (14 bar) bourdon pressure gauge with 1 psi (0.0689 bar) graduations
(2) A number of pitot tubes
(3) Hydrant wrenches
(4) 50 or 60 psi (3.5 or 4.0 bar) bourdon pressure gauges with 1 psi (0.0689 bar) graduations, and scales with 1/16 in. (1.6 mm) graduations [One pitot tube, a 50 or 60 psi (3.5 or 4.0 bar) gauge, a hydrant wrench, a scale for each hydrant to be flowed]
(5) A special hydrant cap tapped with a hole into which a short length of ¼ in. (6.35 mm) brass pipe is fitted; this pipe is provided with a T connection for the 200 psi (14 bar) gauge and a cock at the end for relieving air pressure

▲ **C.4.4.2** All pressure gauges should be calibrated at least every 12 months, or more frequently depending on use.

▲ **C.4.4.3** When more than one hydrant is flowed, it is desirable and could be necessary to use portable radios to facilitate communication between team members.

▲ **C.4.4.4** It is preferred to use stream straightener with a known coefficient of discharge when testing hydrants due to a more streamlined flow and more accurate pitot reading.

C.4.5 Test Procedure.

C.4.5.1 In a typical test, the 200 psi (14 bar) gauge is attached to one of the 2½ in. (64 mm) outlets of the residual hydrant using the special cap.

C.4.5.2 The cock on the gauge piping is opened, and the hydrant valve is opened full.

C.4.5.3 As soon as the air is exhausted from the barrel, the cock is closed.

▲ **C.4.5.4** A reading (static pressure) is taken when the needle comes to rest.

C.4.5.5 At a given signal, each of the other hydrants is opened in succession, with discharge taking place directly from the open hydrant butts.

C.4.5.6 Hydrants should be opened one at a time.

C.4.5.7 With all hydrants flowing, water should be allowed to flow for a sufficient time to clear all debris and foreign substances from the stream(s).

C.4.5.8 At that time, a signal is given to the people at the hydrants to read the pitot pressure of the streams simultaneously while the residual pressure is being read.

C.4.5.9 The final magnitude of the pressure drop can be controlled by the number of hydrants used and the number of outlets opened on each.

▲ **C.4.5.10** After the readings have been taken, hydrants should be shut down slowly, one at a time, to prevent undue surges in the system.

C.4.6 Pitot Readings.

C.4.6.1 When measuring discharge from open hydrant butts, it is always preferable from the standpoint of accuracy to use 2½ in. (64 mm) outlets rather than pumper outlets.

C.4.6.2 In practically all cases, the 2½ in. (64 mm) outlets are filled across the entire cross section during flow, while in the case of the larger outlets there is very frequently a void near the bottom.

C.4.6.3 When measuring the pitot pressure of a stream of practically uniform velocity, the orifice in the pitot tube is held downstream approximately one-half the diameter of the hydrant outlet or nozzle opening, and in the center of the stream.

Copyright 2013 National Fire Protection Association (NFPA). Licensed, by agreement, for individual use and single download via NFCSS All Access on June 6, 2013 to GATEWAY TECH COLLEGE for designated user 0171780. No other reproduction or transmission in any form permitted without written permission of NFPA. For inquires or to report unauthorized use, contact licensing@nfpa.org. This NFCSS All Access subscription expires on 12/31/2013.

▲ **C.4.6.4** The center line of the orifice should be at right angles to the plane of the face of the hydrant outlet.

C.4.6.5 The air chamber on the pitot tube should be kept elevated.

▲ **C.4.6.6** Pitot readings of less than 10 psi (0.7 bar) and more than 30 psi (2.0 bar) should be avoided, if possible.

C.4.6.7 Opening additional hydrant outlets will aid in controlling the pitot reading.

C.4.6.8 With dry barrel hydrants, the hydrant valve should be wide open to minimize problems with underground drain valves.

C.4.6.9 With wet barrel hydrants, the valve for the flowing outlet should be wide open to give a more streamlined flow and a more accurate pitot reading. *(See Figure C.4.6.9.)*

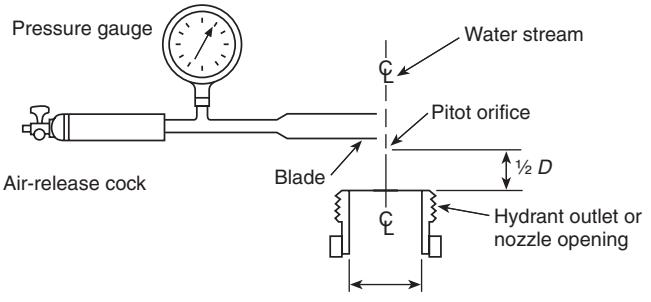

FIGURE C.4.6.9 Pitot Tube Position.

C.4.7 Determination of Discharge.

▲ **C.4.7.1** At the hydrants used for flow during the test, the discharges from the open butts are determined from measurements of the diameter of the outlets flowed, the pitot pressure (velocity head) of the streams as indicated by the pitot gauge readings, and the coefficient of the outlet being flowed as determined from Figure C.4.7.1.

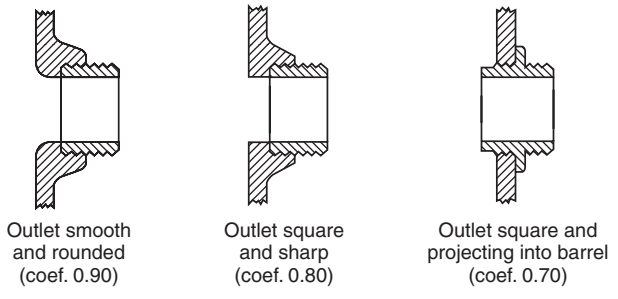

FIGURE C.4.7.1 Three General Types of Hydrant Outlets and Their Coefficients of Discharge.

C.4.7.2 If flow tubes (stream straighteners) are being utilized, a coefficient of 0.95 is suggested unless the coefficient of the tube is known.

C.4.7.3 The formula used to compute the discharge, Q, in gpm from these measurements is as follows:

$$Q = 29.84cd^2\sqrt{p} \qquad \textbf{(C.4.7.3)}$$

where:
c = coefficient of discharge *(see Figure C.4.7.1)*
d = diameter of the outlet in inches
p = pitot pressure (velocity head) in psi

C.4.8 Use of Pumper Outlets.

C.4.8.1 If it is necessary to use a pumper outlet, and flow tubes (stream straighteners) are not available, the best results are obtained with the pitot pressure (velocity head) maintained between 5 psi and 10 psi (0.3 bar and 0.7 bar).

C.4.8.2 For pumper outlets, the approximate discharge can be computed from Equation C.4.7.3 using the pitot pressure (velocity head) at the center of the stream and multiplying the result by one of the coefficients in Table C.4.8.2, depending upon the pitot pressure (velocity head).

Table C.4.8.2 Pumper Outlet Coefficients Pitot Pressure

Velocity Head		
psi	**bar**	**Coefficient**
2	0.14	0.97
3	0.21	0.92
4	0.28	0.89
5	0.35	0.86
6	0.41	0.84
7 and over	0.48 and over	0.83

C.4.8.3 These coefficients are applied in addition to the coefficient in Equation C.4.7.3 and are for average-type hydrants.

C.4.9 Determination of Discharge Without a Pitot.

C.4.9.1 If a pitot tube is not available for use to measure the hydrant discharge, a 50 or 60 psi (3.5 or 4.0 bar) gauge tapped into a hydrant cap can be used.

C.4.9.2 The hydrant cap with gauge attached is placed on one outlet, and the flow is allowed to take place through the other outlet at the same elevation.

C.4.9.3 The readings obtained from a gauge so located, and the readings obtained from a gauge on a pitot tube held in the stream, are approximately the same.

C.4.10 Calculation Results.

▲ **C.4.10.1** The discharge in L/min (gpm) for each outlet flowed is obtained from Table C.4.10.1(a) and Table C.4.10.1(b) or by the use of Equation C.4.7.3.

C.4.10.1.1 If more than one outlet is used, the discharges from all are added to obtain the total discharge.

▲ **C.4.10.1.2** The formula that is generally used to compute the discharge at the specified residual pressure or for any desired pressure drop is Equation C.4.10.1.2:

$$Q_R = Q_F \times \frac{h_r^{0.54}}{h_f^{0.54}} \qquad \textbf{(C.4.10.1.2)}$$

where:
Q_R = flow predicted at desired residual pressure
Q_F = total flow measured during test
h_r = pressure drop to desired residual pressure
h_f = pressure drop measured during test

Copyright 2013 National Fire Protection Association (NFPA). Licensed, by agreement, for individual use and single download via NFCSS All Access on June 6, 2013 to GATEWAY TECH COLLEGE for designated user 0171780. No other reproduction or transmission in any form permitted without written permission of NFPA. For inquires or to report unauthorized use, contact licensing@nfpa.org. This NFCSS All Access subscription expires on 12/31/2013.

Table C.4.10.1(a) Theoretical Discharge Through Circular Orifices (U.S. Gallons of Water per Minute)

Pitot Pressure*		Velocity Discharge	Orifice Size (in.)											
(psi)	Feet†	(ft/sec)	2	2.25	2.375	2.5	2.625	2.75	3	3.25	3.5	3.75	4	4.5
1	2.31	12.2	119	151	168	187	206	226	269	315	366	420	477	604
2	4.61	17.25	169	214	238	264	291	319	380	446	517	593	675	855
3	6.92	21.13	207	262	292	323	356	391	465	546	633	727	827	1047
4	9.23	24.39	239	302	337	373	411	451	537	630	731	839	955	1209
5	11.54	27.26	267	338	376	417	460	505	601	705	817	938	1068	1351
6	13.84	29.87	292	370	412	457	504	553	658	772	895	1028	1169	1480
7	16.15	32.26	316	400	445	493	544	597	711	834	967	1110	1263	1599
8	18.46	34.49	338	427	476	528	582	638	760	891	1034	1187	1350	1709
9	20.76	36.58	358	453	505	560	617	677	806	946	1097	1259	1432	1813
10	23.07	38.56	377	478	532	590	650	714	849	997	1156	1327	1510	1911
11	25.38	40.45	396	501	558	619	682	748	891	1045	1212	1392	1583	2004
12	27.68	42.24	413	523	583	646	712	782	930	1092	1266	1454	1654	2093
13	29.99	43.97	430	545	607	672	741	814	968	1136	1318	1513	1721	2179
14	32.3	45.63	447	565	630	698	769	844	1005	1179	1368	1570	1786	2261
15	34.61	47.22	462	585	652	722	796	874	1040	1221	1416	1625	1849	2340
16	36.91	48.78	477	604	673	746	822	903	1074	1261	1462	1679	1910	2417
17	39.22	50.28	492	623	694	769	848	930	1107	1300	1507	1730	1969	2491
18	41.53	51.73	506	641	714	791	872	957	1139	1337	1551	1780	2026	2564
19	43.83	53.15	520	658	734	813	896	984	1171	1374	1593	1829	2081	2634
20	46.14	54.54	534	676	753	834	920	1009	1201	1410	1635	1877	2135	2702
22	50.75	57.19	560	709	789	875	964	1058	1260	1478	1715	1968	2239	2834
24	55.37	59.74	585	740	825	914	1007	1106	1316	1544	1791	2056	2339	2960
26	59.98	62.18	609	770	858	951	1048	1151	1369	1607	1864	2140	2434	3081
28	64.6	64.52	632	799	891	987	1088	1194	1421	1668	1934	2220	2526	3197
30	69.21	66.79	654	827	922	1022	1126	1236	1471	1726	2002	2298	2615	3310
32	73.82	68.98	675	855	952	1055	1163	1277	1519	1783	2068	2374	2701	3418
34	78.44	71.1	696	881	981	1087	1199	1316	1566	1838	2131	2447	2784	3523
36	83.05	73.16	716	906	1010	1119	1234	1354	1611	1891	2193	2518	2865	3626
38	87.67	75.17	736	931	1038	1150	1268	1391	1656	1943	2253	2587	2943	3725
40	92.28	77.11	755	955	1065	1180	1300	1427	1699	1993	2312	2654	3020	3822
42	96.89	79.03	774	979	1091	1209	1333	1462	1740	2043	2369	2719	3094	3916
44	101.51	80.88	792	1002	1116	1237	1364	1497	1781	2091	2425	2783	3167	4008
46	106.12	82.7	810	1025	1142	1265	1395	1531	1821	2138	2479	2846	3238	4098
48	110.74	84.48	827	1047	1166	1292	1425	1563	1861	2184	2533	2907	3308	4186
50	115.35	86.22	844	1068	1190	1319	1454	1596	1899	2229	2585	2967	3376	4273
52	119.96	87.93	861	1089	1214	1345	1483	1627	1937	2273	2636	3026	3443	4357
54	124.58	89.61	877	1110	1237	1370	1511	1658	1974	2316	2686	3084	3508	4440
56	129.19	91.2	893	1130	1260	1396	1539	1689	2010	2359	2735	3140	3573	4522
58	133.81	92.87	909	1150	1282	1420	1566	1719	2045	2400	2784	3196	3636	4602
60	138.42	94.45	925	1170	1304	1445	1593	1748	2080	2441	2831	3250	3698	4681
62	143.03	96.01	940	1189	1325	1469	1619	1777	2115	2482	2878	3304	3759	4758
64	147.65	97.55	955	1209	1347	1492	1645	1805	2148	2521	2924	3357	3820	4834
66	152.26	99.07	970	1227	1367	1515	1670	1833	2182	2561	2970	3409	3879	4909
68	156.88	100.55	984	1246	1388	1538	1696	1861	2215	2599	3014	3460	3937	4983
70	161.49	102.03	999	1264	1408	1560	1720	1888	2247	2637	3058	3511	3995	5056
72	166.1	103.47	1013	1282	1428	1583	1745	1915	2279	2674	3102	3561	4051	5127
74	170.72	104.9	1027	1300	1448	1604	1769	1941	2310	2711	3144	3610	4107	5198
76	175.33	106.3	1041	1317	1467	1626	1793	1967	2341	2748	3187	3658	4162	5268
78	179.95	107.69	1054	1334	1487	1647	1816	1993	2372	2784	3228	3706	4217	5337
80	184.56	109.08	1068	1351	1505	1668	1839	2018	2402	2819	3269	3753	4270	5405

(continues)

Copyright 2013 National Fire Protection Association (NFPA). Licensed, by agreement, for individual use and single download via NFCSS All Access on June 6, 2013 to GATEWAY TECH COLLEGE for designated user 0171780. No other reproduction or transmission in any form permitted without written permission of NFPA. For inquires or to report unauthorized use, contact licensing@nfpa.org. This NFCSS All Access subscription expires on 12/31/2013.

Table C.4.10.1(a) *Continued*

Pitot Pressure* (psi)	Feet†	Velocity Discharge (ft/sec)	Orifice Size (in.) 2	2.25	2.375	2.5	2.625	2.75	3	3.25	3.5	3.75	4	4.5
82	189.17	110.42	1081	1368	1524	1689	1862	2043	2432	2854	3310	3800	4323	5472
84	193.79	111.76	1094	1385	1543	1709	1885	2068	2461	2889	3350	3846	4376	5538
86	198.4	113.08	1107	1401	1561	1730	1907	2093	2491	2923	3390	3891	4428	5604
88	203.02	114.39	1120	1417	1579	1750	1929	2117	2519	2957	3429	3936	4479	5668
90	207.63	115.68	1132	1433	1597	1769	1951	2141	2548	2990	3468	3981	4529	5733
92	212.24	116.96	1145	1449	1614	1789	1972	2165	2576	3023	3506	4025	4579	5796
94	216.86	118.23	1157	1465	1632	1808	1994	2188	2604	3056	3544	4068	4629	5859
96	221.47	119.48	1169	1480	1649	1827	2015	2211	2631	3088	3582	4111	4678	5921
98	226.09	120.71	1182	1495	1666	1846	2035	2234	2659	3120	3619	4154	4726	5982
100	230.7	121.94	1194	1511	1683	1865	2056	2257	2686	3152	3655	4196	4774	6043
102	235.31	123.15	1205	1526	1700	1884	2077	2279	2712	3183	3692	4238	4822	6103
104	239.93	124.35	1217	1541	1716	1902	2097	2301	2739	3214	3728	4279	4869	6162
106	244.54	125.55	1229	1555	1733	1920	2117	2323	2765	3245	3763	4320	4916	6221
108	249.16	126.73	1240	1570	1749	1938	2137	2345	2791	3275	3799	4361	4962	6280
110	253.77	127.89	1252	1584	1765	1956	2157	2367	2817	3306	3834	4401	5007	6338
112	258.38	129.05	1263	1599	1781	1974	2176	2388	2842	3336	3869	4441	5053	6395
114	263	130.2	1274	1613	1797	1991	2195	2409	2867	3365	3903	4480	5098	6452
116	267.61	131.33	1286	1627	1813	2009	2215	2430	2892	3395	3937	4519	5142	6508
118	272.23	132.46	1297	1641	1828	2026	2234	2451	2917	3424	3971	4558	5186	6564
120	276.84	133.57	1308	1655	1844	2043	2252	2472	2942	3453	4004	4597	5230	6619
122	281.45	134.69	1318	1669	1859	2060	2271	2493	2966	3481	4038	4635	5273	6674
124	286.07	135.79	1329	1682	1874	2077	2290	2513	2991	3510	4070	4673	5317	6729
126	290.68	136.88	1340	1696	1889	2093	2308	2533	3015	3538	4103	4710	5359	6783
128	295.3	137.96	1350	1709	1904	2110	2326	2553	3038	3566	4136	4748	5402	6836
130	299.91	139.03	1361	1722	1919	2126	2344	2573	3062	3594	4168	4784	5444	6890
132	304.52	140.1	1371	1736	1934	2143	2362	2593	3086	3621	4200	4821	5485	6942
134	309.14	141.16	1382	1749	1948	2159	2380	2612	3109	3649	4231	4858	5527	6995
136	313.75	142.21	1392	1762	1963	2175	2398	2632	3132	3676	4263	4894	5568	7047

Notes:

(1) This table is computed from the formula: $Q = 29.84cd^2\sqrt{p}$ with $c = 1.00$. The theoretical discharge of seawater, as from fireboat nozzles, can be found by subtracting 1 percent from the figures in Table C.4.10.2.1, or from the formula:

$$Q = 29.84cd^2\sqrt{p}$$

(2) Appropriate coefficient should be applied where it is read from hydrant outlet. Where more accurate results are required, a coefficient appropriate on the particular nozzle must be selected and applied to the figures of the table. The discharge from circular openings of sizes other than those in the table can readily be computed by applying the principle that quantity discharged under a given head varies as the square of the diameter of the opening.

*This pressure corresponds to velocity head.

†1 psi = 2.307 ft of water. For pressure in bar, multiply by 0.01.

Copyright 2013 National Fire Protection Association (NFPA). Licensed, by agreement, for individual use and single download via NFCSS All Access on June 6, 2013 to GATEWAY TECH COLLEGE for designated user 0171780. No other reproduction or transmission in any form permitted without written permission of NFPA. For inquires or to report unauthorized use, contact licensing@nfpa.org. This NFCSS All Access subscription expires on 12/31/2013.

Table C.4.10.1(b) Theoretical Discharge Through Circular Orifices (Liters of Water per Minute)

Pitot Pressure*		Velocity Discharge	Orifice Size (mm)											
(kPa)	Meters†	(m/sec)	51	57	60	64	67	70	76	83	89	95	101	114
6.89	0.7	3.72	455	568	629	716	785	857	1010	1204	1385	1578	1783	2272
13.8	1.41	5.26	644	804	891	1013	1111	1212	1429	1704	1960	2233	2524	3215
20.7	2.11	6.44	788	984	1091	1241	1360	1485	1750	2087	2400	2735	3091	3938
27.6	2.81	7.43	910	1137	1260	1433	1571	1714	2021	2410	2771	3158	3569	4547
34.5	3.52	8.31	1017	1271	1408	1602	1756	1917	2259	2695	3099	3530	3990	5084
41.4	4.22	9.1	1115	1392	1543	1755	1924	2100	2475	2952	3394	3867	4371	5569
48.3	4.92	9.83	1204	1504	1666	1896	2078	2268	2673	3189	3666	4177	4722	6015
55.2	5.63	10.51	1287	1608	1781	2027	2221	2425	2858	3409	3919	4466	5048	6431
62	6.33	11.15	1364	1704	1888	2148	2354	2570	3029	3613	4154	4733	5349	6815
68.9	7.03	11.75	1438	1796	1990	2264	2482	2709	3193	3808	4379	4989	5639	7184
75.8	7.73	12.33	1508	1884	2087	2375	2603	2841	3349	3995	4593	5233	5915	7536
82.7	8.44	12.87	1575	1968	2180	2481	2719	2968	3498	4172	4797	5466	6178	7871
89.6	9.14	13.4	1640	2048	2270	2582	2830	3089	3641	4343	4994	5690	6431	8193
96.5	9.84	13.91	1702	2126	2355	2680	2937	3206	3779	4507	5182	5905	6674	8503
103	10.55	14.39	1758	2196	2433	2769	3034	3312	3904	4656	5354	6100	6895	8784
110	11.25	14.87	1817	2269	2515	2861	3136	3423	4035	4812	5533	6304	7125	9078
117	11.95	15.33	1874	2341	2593	2951	3234	3530	4161	4963	5706	6502	7349	9362
124	12.66	15.77	1929	2410	2670	3038	3329	3634	4284	5109	5874	6693	7565	9638
131	13.36	16.2	1983	2477	2744	3122	3422	3735	4403	5251	6038	6880	7776	9906
138	14.06	16.62	2035	2542	2817	3205	3512	3834	4519	5390	6197	7061	7981	10168
152	15.47	17.43	2136	2668	2956	3363	3686	4023	4743	5657	6504	7410	8376	10671
165	16.88	18.21	2225	2779	3080	3504	3840	4192	4941	5893	6776	7721	8727	11118
179	18.28	18.95	2318	2895	3208	3650	4000	4366	5147	6138	7058	8042	9090	11580
193	19.69	19.67	2407	3006	3331	3790	4153	4534	5344	6374	7329	8350	9438	12024
207	21.1	20.36	2492	3113	3450	3925	4301	4695	5535	6601	7590	8648	9775	12453
221	22.5	21.03	2575	3217	3564	4055	4444	4851	5719	6821	7842	8935	10100	12867
234	23.91	21.67	2650	3310	3668	4173	4573	4992	5884	7018	8070	9195	10393	13240
248	25.31	22.3	2728	3408	3776	4296	4708	5139	6058	7225	8308	9466	10699	13630
262	26.72	22.91	2804	3502	3881	4416	4839	5282	6227	7426	8539	9729	10997	14010
276	28.13	23.5	2878	3595	3983	4532	4967	5422	6391	7622	8764	9986	11287	14379
290	29.53	24.09	2950	3685	4083	4646	5091	5557	6551	7813	8984	10236	11570	14740
303	30.94	24.65	3015	3767	4173	4748	5204	5681	6696	7986	9183	10463	11826	15066
317	32.35	25.21	3084	3853	4269	4857	5323	5810	6849	8169	9393	10702	12096	15410
331	33.75	25.75	3152	3937	4362	4963	5439	5937	6999	8347	9598	10935	12360	15747
345	35.16	26.28	3218	4019	4453	5067	5553	6061	7145	8522	9799	11164	12619	16077
358	36.57	26.8	3278	4094	4536	5161	5657	6175	7279	8681	9981	11373	12855	16377
372	37.97	27.31	3341	4173	4624	5261	5766	6294	7419	8849	10175	11593	13104	16694
386	39.38	27.8	3403	4251	4711	5360	5874	6412	7558	9014	10364	11809	13348	17005
400	40.78	28.31	3465	4328	4795	5456	5979	6527	7694	9176	10551	12021	13588	17311
414	42.19	28.79	3525	4403	4878	5551	6083	6640	7827	9335	10734	12230	13823	17611
427	43.6	29.26	3580	4471	4954	5637	6178	6743	7949	9481	10901	12420	14039	17885
441	45	29.73	3638	4544	5035	5729	6278	6853	8078	9635	11078	12622	14267	18176
455	46.41	30.2	3695	4616	5114	5819	6377	6961	8206	9787	11253	12821	14492	18462
469	47.82	30.65	3751	4686	5192	5908	6475	7067	8331	9936	11425	13017	14713	18744
483	49.22	31.1	3807	4756	5269	5995	6570	7172	8454	10083	11594	13210	14931	19022
496	50.63	31.54	3858	4819	5340	6075	6658	7268	8567	10218	11749	13386	15131	19276
510	52.03	31.97	3912	4887	5415	6161	6752	7370	8687	10361	11913	13574	15343	19547
524	53.44	32.71	3965	4953	5488	6245	6844	7470	8806	10503	12076	13759	15552	19813
538	54.85	32.82	4018	5019	5561	6327	6934	7569	8923	10642	12236	13942	15758	20076
552	56.25	33.25	4070	5084	5633	6409	7024	7667	9038	10780	12394	14122	15962	20335

(continues)

Copyright 2013 National Fire Protection Association (NFPA). Licensed, by agreement, for individual use and single download via NFCSS All Access on June 6, 2013 to GATEWAY TECH COLLEGE for designated user 0171780. No other reproduction or transmission in any form permitted without written permission of NFPA. For inquires or to report unauthorized use, contact licensing@nfpa.org. This NFCSS All Access subscription expires on 12/31/2013.

Table C.4.10.1(b) *Continued*

Pitot Pressure*		Velocity Discharge	Orifice Size (mm)											
(kPa)	Meters†	(m/sec)	51	57	60	64	67	70	76	83	89	95	101	114
565	57.66	33.66	4118	5143	5699	6484	7106	7757	9144	10906	12539	14287	16149	20573
579	59.07	34.06	4168	5207	5769	6564	7194	7853	9256	11040	12694	14463	16348	20827
593	60.47	34.47	4218	5269	5839	6643	7280	7947	9368	11173	12846	14637	16544	21077
607	61.88	34.87	4268	5331	5907	6721	7366	8040	9478	11304	12997	14809	16738	21324
620	63.29	35.26	4313	5388	5970	6793	7444	8126	9578	11424	13136	14966	16917	21552
634	64.69	35.65	4362	5448	6037	6869	7528	8217	9686	11552	13283	15134	17107	21794
648	66.1	36.04	4410	5508	6103	6944	7610	8307	9792	11679	13429	15301	17294	22033
662	67.5	36.42	4457	5567	6169	7019	7692	8397	9898	11805	13573	15465	17480	22270
676	68.91	36.79	4504	5626	6234	7093	7773	8485	10002	11929	13716	15628	17664	22504
689	70.32	37.17	4547	5680	6293	7161	7848	8566	10097	12043	13847	15777	17833	22719
703	71.72	37.54	4593	5737	6357	7233	7927	8653	10200	12165	13987	15937	18013	22949
717	73.13	37.9	4638	5794	6420	7305	8005	8738	10301	12285	14126	16095	18192	23176
731	74.54	38.27	4684	5850	6482	7376	8083	8823	10401	12405	14263	16251	18369	23401
745	75.94	38.63	4728	5906	6544	7446	8160	8907	10500	12523	14399	16406	18544	23624
758	77.35	38.98	4769	5957	6601	7510	8231	8985	10591	12632	14524	16548	18705	23830
772	78.76	39.33	4813	6012	6662	7580	8307	9067	10688	12748	14658	16701	18877	24049
786	80.16	39.68	4857	6066	6722	7648	8382	9149	10785	12863	14790	16851	19047	24266
800	81.57	40.03	4900	6120	6781	7716	8456	9230	10880	12977	14921	17001	19216	24481
813	82.97	40.37	4939	6170	6836	7778	8525	9305	10968	13082	15042	17138	19371	24679
827	84.38	40.71	4982	6223	6895	7845	8598	9385	11063	13194	15171	17285	19538	24891
841	85.79	41.05	5024	6275	6953	7911	8670	9464	11156	13305	15299	17431	19702	25100
855	87.19	41.39	5065	6327	7011	7977	8742	9542	11248	13416	15425	17575	19866	25309
869	88.6	41.72	5107	6379	7068	8042	8813	9620	11340	13525	15551	17719	20028	25515
882	90.01	42.05	5145	6426	7121	8102	8879	9692	11424	13626	15667	17851	20177	25705
896	91.41	42.38	5185	6477	7177	8166	8949	9768	11515	13734	15791	17992	20336	25908
910	92.82	42.7	5226	6527	7233	8229	9019	9844	11604	13840	15914	18132	20495	26110
924	94.23	43.03	5266	6577	7288	8292	9088	9920	11693	13947	16036	18271	20652	26310
938	95.63	43.35	5305	6627	7343	8355	9156	9995	11782	14052	16157	18409	20807	26509

Notes:

(1) This table is computed from the formula $Q_m = 0.0666cd^2\sqrt{P_m}$ with $c = 1.00$. The theoretical discharge of seawater, as from fireboat nozzles, can be found by subtracting 1 percent from the figures in Table C.4.10.2.1, or from the formula:

$$Q_m = 0.065cd^2m\sqrt{P_m}$$

(2) Appropriate coefficient should be applied where it is read from hydrant outlet. Where more accurate results are required, a coefficient appropriate on the particular nozzle must be selected and applied to the figures of the table. The discharge from circular openings of sizes other than those in the table can readily be computed by applying the principle that quantity discharged under a given head varies as the square of the diameter of the opening.

*This pressure corresponds to velocity head.

†1 kPa = 0.102 m of water. For pressure in bar, multiply by 0.01.

Copyright 2013 National Fire Protection Association (NFPA). Licensed, by agreement, for individual use and single download via NFCSS All Access on June 6, 2013 to GATEWAY TECH COLLEGE for designated user 0171780. No other reproduction or transmission in any form permitted without written permission of NFPA. For inquires or to report unauthorized use, contact licensing@nfpa.org. This NFCSS All Access subscription expires on 12/31/2013.

C.4.10.1.3 In Equation C.4.10.1.2, any units of discharge or pressure drop can be used as long as the same units are used for each value of the same variable.

C.4.10.1.4 In other words, if Q_R is expressed in gpm, Q_F must be in gpm, and if h_r is expressed in psi, h_f must be expressed in psi.

C.4.10.1.5 These are the units that are normally used in applying Equation C.4.10.1.2 to fire flow test computations.

C.4.10.2 Discharge Calculations from Table.

C.4.10.2.1 One means of solving this equation without the use of logarithms is by using Table C.4.10.2.1, which gives the values of the 0.54 power of the numbers from 1 to 175.

C.4.10.2.2 Knowing the values of h_f, h_r, and Q_F, the values of $h_f^{0.54}$ and $h_r^{0.54}$ can be read from the table and Equation C.4.10.1.2 solved for Q_R.

C.4.10.2.3 Results are usually carried to the nearest 100 gpm (380 L/min) for discharges of 1000 gpm (3800 L/min) or more, and to the nearest 50 gpm (190 L/min) for smaller discharges, which is as close as can be justified by the degree of accuracy of the field observations.

C.4.10.2.4 Insert in Equation C.4.10.1.2 the values of $h_r^{0.54}$ and $h_f^{0.54}$ determined from the table and the value of Q_F, and solve the equation for Q_R.

C.4.11 Data Sheet.

C.4.11.1 The data secured during the testing of hydrants for uniform marking can be valuable for other purposes.

C.4.11.2 With this in mind, it is suggested that the form shown in Figure C.4.11.2 be used to record information that is taken.

Table C.4.10.2.1 Values of *h* to the 0.54 Power

h	$h^{0.54}$	h	$h^{0.54}$	h	$h^{0.54}$	h	$h^{0.54}$	h	$h^{0.54}$
1	1.00	36	6.93	71	9.99	106	12.41	141	14.47
2	1.45	37	7.03	72	10.07	107	12.47	142	14.53
3	1.81	38	7.13	73	10.14	108	12.53	143	14.58
4	2.11	39	7.23	74	10.22	109	12.60	144	14.64
5	2.39	40	7.33	75	10.29	110	12.66	145	14.69
6	2.63	41	7.43	76	10.37	111	12.72	146	14.75
7	2.86	42	7.53	77	10.44	112	12.78	147	14.80
8	3.07	43	7.62	78	10.51	113	12.84	148	14.86
9	3.28	44	7.72	79	10.59	114	12.90	149	14.91
10	3.47	45	7.81	80	10.66	115	12.96	150	14.97
11	3.65	46	7.91	81	10.73	116	13.03	151	15.02
12	3.83	47	8.00	82	10.80	117	13.09	152	15.07
13	4.00	48	8.09	83	10.87	118	13.15	153	15.13
14	4.16	49	8.18	84	10.94	119	13.21	154	15.18
15	4.32	50	8.27	85	11.01	120	13.27	155	15.23
16	4.48	51	8.36	86	11.08	121	13.33	156	15.29
17	4.62	52	8.44	87	11.15	122	13.39	157	15.34
18	4.76	53	8.53	88	11.22	123	13.44	158	15.39
19	4.90	54	8.62	89	11.29	124	13.50	159	15.44
20	5.04	55	8.71	90	11.36	125	13.56	160	15.50
21	5.18	56	8.79	91	11.43	126	13.62	161	15.55
22	5.31	57	8.88	92	11.49	127	13.68	162	15.60
23	5.44	58	8.96	93	11.56	128	13.74	163	15.65
24	5.56	59	9.04	94	11.63	129	13.80	164	15.70
25	5.69	60	9.12	95	11.69	130	13.85	165	15.76
26	5.81	61	9.21	96	11.76	131	13.91	166	15.81
27	5.93	62	9.29	97	11.83	132	13.97	167	15.86
28	6.05	63	9.37	98	11.89	133	14.02	168	15.91
29	6.16	64	9.45	99	11.96	134	14.08	169	15.96
30	6.28	65	9.53	100	12.02	135	14.14	170	16.01
31	6.39	66	9.61	101	12.09	136	14.19	171	16.06
32	6.50	67	9.69	102	12.15	137	14.25	172	16.11
33	6.61	68	9.76	103	12.22	138	14.31	173	16.16
34	6.71	69	9.84	104	12.28	139	14.36	174	16.21
35	6.82	70	9.92	105	12.34	140	14.42	175	16.26

Copyright 2013 National Fire Protection Association (NFPA). Licensed, by agreement, for individual use and single download via NFCSS All Access on June 6, 2013 to GATEWAY TECH COLLEGE for designated user 0171780. No other reproduction or transmission in any form permitted without written permission of NFPA. For inquires or to report unauthorized use, contact licensing@nfpa.org. This NFCSS All Access subscription expires on 12/31/2013.

Hydrant Flow Test Report

Location _____ Date _____

Test made by _____ Time _____

Representative of _____

Witness _____

State purpose of test _____

_____

Consumption rate during test _____

If pumps affect test, indicate pumps operating _____

Flow hydrants: A_1 A_2 A_3 A_4

Size nozzle _____

Pitot reading _____

Discharge coefficient _____ Total GPM

GPM _____

Static B _____ psi Residual B _____ psi

Projected results @20 psi Residual ____ gpm; or @___ psi Residual ___ gpm

Remarks: _____

_____

_____

_____

Location map: Show line sizes and distance to next cross-connected line. Show valves and hydrant branch size. Indicate north. Show flowing hydrants – Label A_1, A_2, A_3, A_4. Show location of static and residual – Label B.

Indicate B Hydrant _____ Sprinkler _____ Other (identify) _____

© 2012 National Fire Protection Association NFPA 24

FIGURE C.4.11.2 Sample Report of Hydrant Flow Test.

C.4.11.3 The back of the form should include a location sketch.

C.4.11.4 Results of the flow test should be indicated on a hydraulic graph, such as the one shown in Figure C.4.11.4.

▲ **C.4.11.5** When the tests are complete, the forms should be filed for future reference by interested parties.

C.4.12 System Corrections.

C.4.12.1 It must be remembered that flow test results show the strength of the distribution system and do not necessarily indicate the degree of adequacy of the entire waterworks system.

C.4.12.2 Consider a system supplied by pumps at one location and having no elevated storage.

C.4.12.3 If the pressure at the pump station drops during the test, it is an indication that the distribution system is capable of delivering more than the pumps can deliver at their normal operating pressure.

C.4.12.4 It is necessary to use a value for the drop in pressure for the test that is equal to the actual drop obtained in the field during the test, minus the drop in discharge pressure at the pumping station.

C.4.12.5 If sufficient pumping capacity is available at the station and the discharge pressure could be maintained by operating additional pumps, the water system as a whole could deliver the computed quantity.

C.4.12.6 If, however, additional pumping units are not available, the distribution system would be capable of delivering

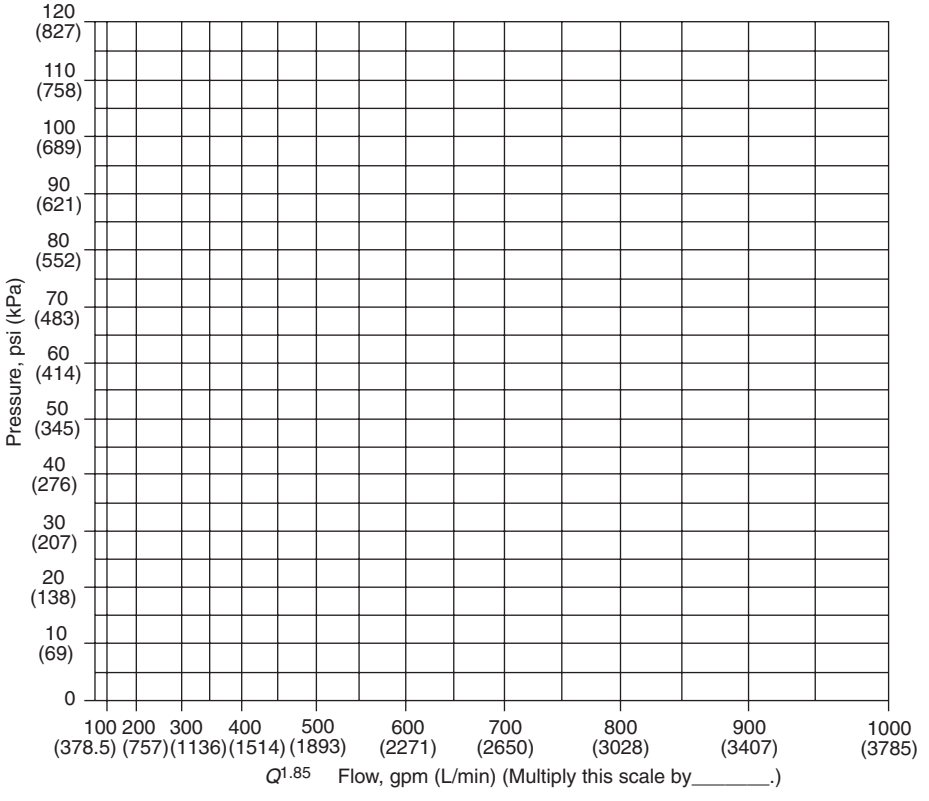

FIGURE C.4.11.4 Sample Graph Sheet.

Copyright 2013 National Fire Protection Association (NFPA). Licensed, by agreement, for individual use and single download via NFCSS All Access on June 6, 2013 to GATEWAY TECH COLLEGE for designated user 0171780. No other reproduction or transmission in any form permitted without written permission of NFPA. For inquires or to report unauthorized use, contact licensing@nfpa.org. This NFCSS All Access subscription expires on 12/31/2013.

the computed quantity, but the water system as a whole would be limited by the pumping capacity.

C.4.12.7 The portion of the pressure drop for which a correction can be made for tests on systems with storage is generally estimated upon the basis of a study of all the tests made and the pressure drops observed on the recording gauge at the station for each.

C.4.12.8 The corrections could vary from very substantial portions of the observed pressure drops for tests near the pumping station, to zero for tests remote from the station.

Annex D Recommended Practice for Marking of Hydrants

This annex is not a part of the requirements of this NFPA document but is included for informational purposes only.

D.1 Annex D was developed based upon the procedures contained in NFPA 291. For additional information on marking of hydrants, see NFPA 291, 2010 Edition, Chapter 5, "Marking of Hydrants."

D.1.1 Scope. The scope of this annex is to provide guidance on marking of hydrants.

D.1.2 Purpose. Fire flow tests are conducted on water distribution systems to determine the rate of flow available at various locations for fire-fighting purposes.

D.1.3 Application.

D.1.3.1 A certain residual pressure in the mains is specified at which the rate of flow should be available.

D.1.3.2 Additional benefit is derived from fire flow tests by the indication of possible deficiencies, such as tuberculation of piping or closed valves or both, which could be corrected to ensure adequate fire flows as needed.

D.1.4 Units. Metric units of measurement in this recommended practice are in accordance with the modernized metric system known as the International System of Units (SI). Two units (liter and bar), outside of but recognized by SI, are commonly used in international fire protection. These units are listed in Table D.1.4 with conversion factors.

Table D.1.4 SI Units and Conversion Factors

Unit Name	Unit Symbol	Conversion Factor
Liter	L	1 gal = 3.785 L
Liter per minute per square meter	(L/min)/m^2	1 gpm ft^2 = (40.746 L/min)/m^2
Cubic decimeter	dm^3	1 gal = 3.785 dm^3
Pascal	Pa	1 psi = 6894.757 Pa
Bar	bar	1 psi = 0.0689 bar
Bar	bar	1 bar = 10^5 Pa

Note: For additional conversions and information, see IEEE/ASTM-SI-10.

D.1.4.1 If a value for measurement as given in this recommended practice is followed by an equivalent value in other units, the first value stated is to be regarded as the recommendation. A given equivalent value might be approximate.

D.2 Referenced Publications.

D.2.1 General. The documents or portions thereof listed in this section are referenced within this annex and should be considered part of the recommendations of this document.

D.2.2 NFPA Publications. (Reserved)

D.2.3 Other Publications.

D.2.3.1 ASTM Publications. ASTM International, 100 Barr Harbor Drive, P.O. Box C700, West Conshohocken, PA 19428-2959.

IEEE/ASTM-SI-10, *Standard for Use of the International System of Units (SI): The Modern Metric System*, 1997.

D.3 Definitions.

D.3.1 General. The definitions contained in this annex apply to the terms used in this annex practice. Where terms are not included, common usage of the terms applies.

D.3.2 NFPA Official Definitions.

D.3.2.1 Authority Having Jurisdiction (AHJ). An organization, office, or individual responsible for enforcing the requirements of a code or standard, or for approving equipment, materials, an installation, or a procedure. *(See A.3.2.2.)*

D.3.2.2 Listed. Equipment, materials, or services included in a list published by an organization that is acceptable to the authority having jurisdiction and concerned with evaluation of products or services, that maintains periodic inspection of production of listed equipment or materials or periodic evaluation of services, and whose listing states that either the equipment, material, or service meets appropriate designated standards or has been tested and found suitable for a specified purpose. *(See A.3.2.4.)*

D.3.2.3 Should. Indicates a recommendation or that which is advised but not required.

D.3.3 General Definitions.

D.3.3.1 Rated Capacity. The flow available from a hydrant at the designated residual pressure (rated pressure), either measured or calculated.

▲ **D.4 Classification of Hydrants.** Hydrants should be classified in accordance with their rated capacities [at 20 psi (1.4 bar) residual pressure or other designated value] as follows:

(1) Class AA — Rated capacity of 1500 gpm (5680 L/min) or greater
(2) Class A — Rated capacity of 1000 to 1499 gpm (3785 to 5675 L/min)
(3) Class B — Rated capacity of 500 to 999 gpm (1900 to 3780 L/min)
(4) Class C — Rated capacity of less than 500 gpm (1900 L/min)

D.5 Marking of Hydrants.

D.5.1 Recommended Hydrant Color Schemes.

D.5.1.1 All barrels are to be chrome yellow except in cases where another color has already been adopted.

▲ **D.5.1.2** The tops and nozzle caps should be painted with the following capacity-indicating color scheme to provide simplicity and consistency with colors used in signal work for safety, danger, and intermediate condition:

Copyright 2013 National Fire Protection Association (NFPA). Licensed, by agreement, for individual use and single download via NFCSS All Access on June 6, 2013 to GATEWAY TECH COLLEGE for designated user 0171780. No other reproduction or transmission in any form permitted without written permission of NFPA. For inquires or to report unauthorized use, contact licensing@nfpa.org. This NFCSS All Access subscription expires on 12/31/2013.

(1) Class AA — light blue
(2) Class A — green
(3) Class B — orange
(4) Class C — red

D.5.1.3 For rapid identification at night, it is recommended that the capacity colors be of a reflective-type paint.

D.5.1.4 Hydrants rated at less than 20 psi (1.4 bar) should have the rated pressure stenciled in black on the hydrant top.

D.5.1.5 In addition to the painted top and nozzle caps, it can be advantageous to stencil the rated capacity of high-volume hydrants on the top.

D.5.1.6 The classification and marking of hydrants provided for in this chapter anticipate determination based on individual flow test.

D.5.1.7 Where a group of hydrants can be used at the time of a fire, some special marking designating group-flow capacity might be desirable.

D.5.1.8 Marking on private hydrants within private enclosures is to be done at the owner's discretion.

D.5.1.9 When private hydrants are located on public streets, they should be painted red, or another color that distinguishes them from public hydrants.

D.5.2 Permanently Inoperative Hydrants. Fire hydrants that are permanently inoperative or unusable should be removed.

D.5.3 Temporarily Inoperative Hydrants. Fire hydrants that are temporarily inoperative or unusable should be wrapped or otherwise provided with temporary indication of their condition.

D.5.4 Flush Hydrants. Location markers for flush hydrants should carry the same background color as stated above for class indication, with such other data stenciled thereon as deemed necessary.

D.5.5 Marking of Hydrants Within Private Enclosures.

D.5.5.1 When private hydrants are located on public streets, they should be marked in accordance with the requirements of the authority having jurisdiction.

Annex E Informational References

E.1 Referenced Publications. The documents or portions thereof listed in this annex are referenced within the informational sections of this standard and are not part of the requirements of this document unless also listed in Chapter 2 for other reasons.

E.1.1 NFPA Publications. National Fire Protection Association, 1 Batterymarch Park, Quincy, MA 02169-7471.

NFPA 20, *Standard for the Installation of Stationary Pumps for Fire Protection*, 2013 edition.

NFPA 22, *Standard for Water Tanks for Private Fire Protection*, 2008 edition.

NFPA 70®, *National Electrical Code®*, 2011 edition.

NFPA 72®, *National Fire Alarm and Signaling Code*, 2013 edition.

NFPA 291, *Recommended Practice for Fire Flow Testing and Marking of Hydrants*, 2010 edition.

NFPA 780, *Standard for the Installation of Lightning Protection Systems*, 2011 edition.

NFPA 1962, *Standard for the Inspection, Care, and Use of Fire Hose, Couplings, and Nozzles and the Service Testing of Fire Hose*, 2008 edition.

E.1.2 Other Publications.

E.1.2.1 ACPA Publications. American Concrete Pipe Association, 1303 West Walnut Hill Lane, Suite 305, Irving, TX 75038-3008.

Concrete Pipe Handbook.

E.1.2.2 ASME Publications. American Society of Mechanical Engineers, Three Park Avenue, New York, NY 10016-5990.

ASME B16.1, *Cast Iron Pipe Flanges and Flanged Fittings*, 1989.

E.1.2.3 ASTM Publications. ASTM International, 100 Barr Harbor Drive, P.O. Box C700, West Conshohocken, PA 19428-2959.

ASTM A 126, *Standard Specification for Gray Iron Castings for Valves, Flanges and Pipe Fittings*, 1993.

ASTM A 197, *Standard Specification for Cupola Malleable Iron*, 1987.

ASTM A 307, *Standard Specification for Carbon Steel Bolts and Studs*, 1994.

ASTM C 296, *Standard Specification for Asbestos-Cement Pressure Pipe*, 1988.

IEEE/ASTM-SI-10, *Standard for Use of the International System of Units (SI): The Modern Metric System*, 1997.

E.1.2.4 AWWA Publications. American Water Works Association, 6666 West Quincy Avenue, Denver, CO 80235.

AWWA C104, *Cement Mortar Lining for Ductile Iron Pipe and Fittings for Water*, 2008.

AWWA C105, *Polyethylene Encasement for Ductile Iron Pipe Systems*, 2005.

AWWA C110, *Ductile Iron and Gray Iron Fittings*, 2008.

AWWA C111, *Rubber-Gasket Joints for Ductile Iron Pressure Pipe and Fittings*, 2000.

AWWA C115, *Flanged Ductile Iron Pipe with Ductile Iron or Gray Iron Threaded Flanges*, 2005.

AWWA C116, *Protective Fusion-Bonded Epoxy Coatings for the Interior and Exterior Surfaces of Ductile-Iron and Gray-Iron Fittings for Water Supply Service*, 2003.

AWWA C150, *Thickness Design of Ductile Iron Pipe*, 2008.

AWWA C151, *Ductile Iron Pipe, Centrifugally Cast for Water*, 2002.

AWWA C153, *Ductile Iron Compact Fittings, 3 in. through 24 in. and 54 in. through 64 in. for Water Service*, 2006.

AWWA C203, *Coal-Tar Protective Coatings and Linings for Steel Water Pipelines Enamel and Tape — Hot Applied*, 2002.

AWWA C205, *Cement-Mortar Protective Lining and Coating for Steel Water Pipe 4 in. and Larger — Shop Applied*, 2007.

AWWA C206, *Field Welding of Steel Water Pipe*, 2003.

AWWA C208, *Dimensions for Fabricated Steel Water Pipe Fittings*, 2007.

AWWA C300, *Reinforced Concrete Pressure Pipe, Steel-Cylinder Type*, 2004.

AWWA C301, *Prestressed Concrete Pressure Pipe, Steel-Cylinder Type*, 2007.

AWWA C302, *Reinforced Concrete Pressure Pipe, Non-Cylinder Type*, 2004.

AWWA C303, *Reinforced Concrete Pressure Pipe, Steel-Cylinder Type, Pretensioned*, 2002.

Copyright 2013 National Fire Protection Association (NFPA). Licensed, by agreement, for individual use and single download via NFCSS All Access on June 6, 2013 to GATEWAY TECH COLLEGE for designated user 0171780. No other reproduction or transmission in any form permitted without written permission of NFPA. For inquires or to report unauthorized use, contact licensing@nfpa.org. This NFCSS All Access subscription expires on 12/31/2013.

AWWA C400, *Standard for Asbestos-Cement Distribution Pipe, 4 in. Through 16 in. (100 mm through 400 mm) for Water Distribution Systems*, 2003.

AWWA C401, *Standard for the Selection of Asbestos-Cement Pressure Pipe 4 in. through 16 in. (100 mm through 400 mm)*, 2003.

AWWA C600, *Standard for the Installation of Ductile-Iron Water Mains and Their Appurtenances*, 2005.

AWWA C602, *Cement-Mortar Lining of Water Pipe Lines 4 in. and Larger — in Place*, 2006.

AWWA C603, *Standard for the Installation of Asbestos-Cement Pressure Pipe*, 2005.

AWWA C606, *Grooved and Shouldered Joints*, 1997.

AWWA C900, *Polyvinyl Chloride (PVC) Pressure Pipe, 4 in. Through 12 in., for Water Distribution*, 2007.

AWWA C905, *AWWA Standard for Polyvinyl Chloride (PVC) Pressure Pipe and Fabricated Fittings 14 in. Through 48 in. (350 mm Through 1,200 mm)*, 2010.

AWWA C906, *Standard for Polyethylene (PE) Pressure Pipe and Fittings, 4 in. (100 mm) Through 63 in. (1,600 mm), for Water Distribution and Transmission*, 2007.

AWWA M9, *Concrete Pressure Pipe*, 2008.

AWWA M11, *A Guide for Steel Pipe Design and Installation*, 4th edition, 2004.

AWWA M14, *Recommended Practice for Backflow Prevention and Cross Connection Control*, 2004.

AWWA M41, *Ductile Iron Pipe and Fittings*, 2003.

E.1.2.5 DIPRA Publications. Ductile Iron Pipe Research Association, 245 Riverchase Parkway East, Suite O, Birmingham, AL 35244.

Installation Guide for Ductile Iron Pipe.

Thrust Restraint Design for Ductile Iron Pipe.

E.1.2.6 EBAA Iron Publications. EBAA Iron, Inc., P.O. Box 857, Eastland, TX 76448.

Thrust Restraint Design Equations and Tables for Ductile Iron and PVC Pipe.

E.1.2.7 UBPPA Publications. Uni-Bell PVC Pipe Association, 2655 Villa Creek Drive, Dallas, TX 75234.

Handbook of PVC Pipe.

E.1.2.8 U.S. Government Publications. U.S. Government Printing Office, Washington, DC 20402.

U.S. Federal Standard No. 66C, *Standard for Steel Chemical Composition and Harden Ability*, April 18, 1967 change notice No. 2, April 16, 1970, as promulgated by the U.S. Federal Government General Services Administration.

E.2 Informational References. The following documents or portions thereof are listed here as informational resources only. They are not a part of the requirements of this document.

AWWA M17, *Installation, Field Testing and Maintenance of Fire Hydrants*, 1989.

E.3 References for Extracts in Informational Sections. (Reserved)

Copyright 2013 National Fire Protection Association (NFPA). Licensed, by agreement, for individual use and single download via NFCSS All Access on June 6, 2013 to GATEWAY TECH COLLEGE for designated user 0171780. No other reproduction or transmission in any form permitted without written permission of NFPA. For inquires or to report unauthorized use, contact licensing@nfpa.org. This NFCSS All Access subscription expires on 12/31/2013.

Index

Copyright © 2012 National Fire Protection Association. All Rights Reserved.

The copyright in this index is separate and distinct from the copyright in the document that it indexes. The licensing provisions set forth for the document are not applicable to this index. This index may not be reproduced in whole or in part by any means without the express written permission of NFPA.

-A-

Aboveground Pipe and Fittings ..... Chap. 12
General 12.1
Protection of Piping 12.2
Administration ..... Chap. 1
Equivalency 1.4
Purpose 1.2
Retroactivity 1.3
Scope 1.1
Units 1.5
Approved
Definition 3.2.1, A.3.2.1
Appurtenance
Definition 3.3.1
Authority Having Jurisdiction (AHJ)
Definition 3.2.2, A.3.2.2

-C-

Corrosion-Resistant Piping
Definition 3.3.2
Corrosion-Retardant Material
Definition 3.3.3

-D-

Definitions ..... Chap. 3

-E-

Explanatory Material ..... Annex A

-F-

Fire Department Connection
Definition 3.3.4
Fire Pump
Definition 3.3.5

-G-

General Requirements ..... Chap. 4
Installation Work 4.2
Plans 4.1, A.4.1

-H-

Hose House
Definition 3.3.6
Hose Houses and Equipment ..... Chap. 8
Construction 8.3
Domestic Service Use Prohibited 8.7
General 8.1
Hose Connections 8.1.4
General Equipment 8.6
Location 8.2
Marking 8.5
Size and Arrangement 8.4, A.8.4
Hydrant
Definition 3.4.1
Dry Barrel Hydrant
Definition 3.4.1.1, A.3.4.1.1
Flow Hydrant
Definition 3.4.1.2
Private Fire Hydrant
Definition 3.4.1.3, A.3.4.1.3
Public Hydrant
Definition 3.4.1.4
Residual Hydrant
Definition 3.4.1.5
Wet Barrel Hydrant
Definition 3.4.1.6
Hydrant Butt
Definition 3.3.7
Hydrants ..... Chap. 7
General 7.1, A.7.1
Installation 7.3
Number and Location 7.2
Hydraulic Calculations ..... Chap. 11
Calculations in SI Units 11.2
Calculations in U.S. Customary Units 11.1, A.11.1
Hydraulically Calculated Water Demand Flow Rate
Definition 3.3.8

-I-

Informational References ..... Annex E

-L-

Labeled
Definition 3.2.3
Listed
Definition 3.2.4, A.3.2.4

-M-

Master Streams ..... Chap. 9
Application and Special Considerations 9.2
Master Streams 9.1, A.9.1

-P-

Pressure
Residual Pressure
Definition 3.3.9.1
Static Pressure
Definition 3.3.9.2
Pressure-Regulating Device
Definition 3.3.10, A.3.3.10
Private Fire Service Main
Definition 3.3.11, A.3.3.11
Pumper Outlet
Definition 3.3.12

-R-

Rated Capacity
Definition 3.3.13
Recommended Practice for Fire Flow Testing ..... Annex C
Recommended Practice for Marking of Hydrants ..... Annex D
Referenced Publications ..... Chap. 2
General 2.1
NFPA Publications 2.2
Other Publications 2.3
References for Extracts in Mandatory Sections 2.4

Copyright 2013 National Fire Protection Association (NFPA). Licensed, by agreement, for individual use and single download via NFCSS All Access on June 6, 2013 to GATEWAY TECH COLLEGE for designated user 0171780. No other reproduction or transmission in any form permitted without written permission of NFPA. For inquires or to report unauthorized use, contact licensing@nfpa.org. This NFCSS All Access subscription expires on 12/31/2013.

-S-

Shall
Definition ... 3.2.5
Should
Definition ... 3.2.6
Sizes of Aboveground and Buried Pipe ... Chap. 13
Mains Not Supplying Hydrants ... 13.2
Mains Supplying Fire Protection Systems ... 13.3
Private Service Mains ... 13.1
Standard
Definition ... 3.2.7
System Inspection, Testing, and Maintenance ... Chap. 14
General ... 14.1

-T-

Test
Flow Test
Definition ... 3.3.14.1
Flushing Test
Definition ... 3.3.14.2
Hydrostatic Test
Definition ... 3.3.14.3

-U-

Underground Piping ... Chap. 10
Backfilling ... 10.9
Depth of Cover ... 10.4
Fittings ... 10.2
Buried Fittings ... 10.2.1, A.10.2.1
Pressure Limits ... 10.2.4
Special Listed Fittings ... 10.2.3
Standard Fittings ... 10.2.2
Joining of Pipe and Fittings ... 10.3
Brazed and Pressure Fitting Methods ... 10.3.4
Buried Joints ... 10.3.1, A.10.3.1
Groove Joining Methods ... 10.3.3, A.10.3.3
Other Joining Methods ... 10.3.5
Pipe Joint Assembly ... 10.3.6
Threaded Pipe and Fittings ... 10.3.2
Joint Restraint ... 10.8
General ... 10.8.1
Steep Grades ... 10.8.1.3
Restrained Joint Systems ... 10.8.3, A.10.8.3
Corrosion Resistance ... 10.8.3.5, A.10.8.3.5
Material ... 10.8.3.4
Sizes of Plug Strap for Bell End of Pipe ... 10.8.3.3
Sizes of Restraint Straps for Tees ... 10.8.3.2
Sizing Clamps, Rods, Bolts, and Washers ... 10.8.3.1
Clamp Bolts ... 10.8.3.1.3
Clamps ... 10.8.3.1.1
Rods ... 10.8.3.1.2
Washers ... 10.8.3.1.4
Thrust Blocks ... 10.8.2, A.10.8.2
Piping Materials ... 10.1, A.10.1
Lining of Buried Pipe ... 10.1.6, A.10.1.6
Listing ... 10.1.1, A.10.1.1
Pipe Type and Class ... 10.1.4, A.10.1.4
Steel Pipe ... 10.1.2
Steel Pipe Used with Fire Department Connections ... 10.1.3
Working Pressure ... 10.1.5, A.10.1.5
Protection Against Damage ... 10.6
Protection Against Freezing ... 10.5
Requirement for Laying Pipe ... 10.7
Testing and Acceptance ... 10.10
Acceptance Requirements ... 10.10.2
Backflow Prevention Assemblies ... 10.10.2.5
Flushing of Piping ... 10.10.2.1, A.10.10.2.1
Hydrostatic Test ... 10.10.2.2
Hydrostatic Testing Allowance ... 10.10.2.2.6, A.10.10.2.2.6
Operating Test ... 10.10.2.4
Other Means of Hydrostatic Tests ... 10.10.2.3
Approval of Underground Piping ... 10.10.1

-V-

Valve
Check Valve
Definition ... 3.3.15.1
Indicating Valve
Definition ... 3.3.15.2
Valve Supervision Issues ... Annex B
Valves ... Chap. 6
Backflow Prevention Assemblies ... 6.5
Check Valves ... 6.8
Identifying and Securing Valves ... 6.7
Post Indicator Valves ... 6.3
Sectional Valves ... 6.6
Types of Valves ... 6.1
Valves Controlling Water Supplies ... 6.2
Valves in Pits ... 6.4

-W-

Water Supplies ... Chap. 5
Connection from Waterworks Systems ... 5.4, A.5.4
Connection to Waterworks Systems ... 5.1, A.5.1
Connections to Public Water Systems ... 5.5
Fire Department Connections ... 5.9, A.5.9
Couplings ... 5.9.2
Drainage ... 5.9.4
General ... 5.9.1
Location and Signage ... 5.9.5
Valves ... 5.9.3
Penstocks, Flumes, Rivers, Lakes, or Reservoirs ... 5.8
Pressure-Regulating Devices and Meters ... 5.3
Pumps ... 5.6, A.5.6
Size of Fire Mains ... 5.2
Mains Not Supplying Hydrants ... 5.2.2
Private Fire Service Mains ... 5.2.1
Tanks ... 5.7

Copyright 2013 National Fire Protection Association (NFPA). Licensed, by agreement, for individual use and single download via NFCSS All Access on June 6, 2013 to GATEWAY TECH COLLEGE for designated user 0171780. No other reproduction or transmission in any form permitted without written permission of NFPA. For inquires or to report unauthorized use, contact licensing@nfpa.org. This NFCSS All Access subscription expires on 12/31/2013.

Formal Interpretation

NFPA 24

Standard for the Installation of Private Fire Service Mains and Their Appurtenances

2013 Edition

Reference: 10.1.1
F.I. No.: 24-07-01

Question No. 1: Is it acceptable to use underground pipe that is not referenced in Table 10.1.1, but is specifically listed for Fire protection Service and complies with the applicable AWWA standards for the pipe?

Answer: Yes

Issue Edition: 2007
Reference: 10.1.1
Issue Date: 01/25/2007
Effective Date: 2/14/2007

Copyright © 2012 All Rights Reserved
NATIONAL FIRE PROTECTION ASSOCIATION

Copyright 2013 National Fire Protection Association (NFPA). Licensed, by agreement, for individual use and single download via NFCSS All Access on June 6, 2013 to GATEWAY TECH COLLEGE for designated user 0171780. No other reproduction or transmission in any form permitted without written permission of NFPA. For inquires or to report unauthorized use, contact licensing@nfpa.org. This NFCSS All Access subscription expires on 12/31/2013.

Sequence of Events Leading to Issuance of this NFPA Committee Document

Step 1: Call for Proposals

- Proposed new Document or new edition of an existing Document is entered into one of two yearly revision cycles, and a Call for Proposals is published.

Step 2: Report on Proposals (ROP)

- Committee meets to act on Proposals, to develop its own Proposals, and to prepare its Report.
- Committee votes by written ballot on Proposals. If two-thirds approve, Report goes forward. Lacking two-thirds approval, Report returns to Committee.
- Report on Proposals (ROP) is published for public review and comment.

Step 3: Report on Comments (ROC)

- Committee meets to act on Public Comments to develop its own Comments, and to prepare its report.
- Committee votes by written ballot on Comments. If two-thirds approve, Report goes forward. Lacking two-thirds approval, Report returns to Committee.
- Report on Comments (ROC) is published for public review.

Step 4: Technical Report Session

- "*Notices of intent to make a motion*" are filed, are reviewed, and valid motions are certified for presentation at the Technical Report Session. ("Consent Documents" that have no certified motions bypass the Technical Report Session and proceed to the Standards Council for issuance.)
- NFPA membership meets each June at the Annual Meeting Technical Report Session and acts on Technical Committee Reports (ROP and ROC) for Documents with "certified amending motions."
- Committee(s) vote on any amendments to Report approved at NFPA Annual Membership Meeting.

Step 5: Standards Council Issuance

- Notification of intent to file an appeal to the Standards Council on Association action must be filed within 20 days of the NFPA Annual Membership Meeting.
- Standards Council decides, based on all evidence, whether or not to issue Document or to take other action, including hearing any appeals.

Committee Membership Classifications

The following classifications apply to Technical Committee members and represent their principal interest in the activity of the committee.

M *Manufacturer:* A representative of a maker or marketer of a product, assembly, or system, or portion thereof, that is affected by the standard.

U *User:* A representative of an entity that is subject to the provisions of the standard or that voluntarily uses the standard.

I/M *Installer/Maintainer:* A representative of an entity that is in the business of installing or maintaining a product, assembly, or system affected by the standard.

L *Labor:* A labor representative or employee concerned with safety in the workplace.

R/T *Applied Research/Testing Laboratory:* A representative of an independent testing laboratory or independent applied research organization that promulgates and/or enforces standards.

E *Enforcing Authority:* A representative of an agency or an organization that promulgates and/or enforces standards.

I *Insurance:* A representative of an insurance company, broker, agent, bureau, or inspection agency.

C *Consumer:* A person who is, or represents, the ultimate purchaser of a product, system, or service affected by the standard, but who is not included in the *User* classification.

SE *Special Expert:* A person not representing any of the previous classifications, but who has a special expertise in the scope of the standard or portion thereof.

NOTES:
1. "Standard" connotes code, standard, recommended practice, or guide.
2. A representative includes an employee.
3. While these classifications will be used by the Standards Council to achieve a balance for Technical Committees, the Standards Council may determine that new classifications of members or unique interests need representation in order to foster the best possible committee deliberations on any project. In this connection, the Standards Council may make appointments as it deems appropriate in the public interest, such as the classification of "Utilities" in the National Electrical Code Committee.
4. Representatives of subsidiaries of any group are generally considered to have the same classification as the parent organization.

Copyright 2013 National Fire Protection Association (NFPA). Licensed, by agreement, for individual use and single download via NFCSS All Access on June 6, 2013 to GATEWAY TECH COLLEGE for designated user 0171780. No other reproduction or transmission in any form permitted without written permission of NFPA. For inquires or to report unauthorized use, contact licensing@nfpa.org. This NFCSS All Access subscription expires on 12/31/2013.

Stay Up-To-Date. Join NFPA® Today!

YES Please enroll me as a member of NFPA for the term checked below. Activate all benefits, and ship my *Member Kit* including the *Benefits Guide* and other resources to help me make the most of my NPFA membership.

Please allow three to four weeks for the kit to arrive.

Billing Information:

Name _____ Title _____

Organization _____

Address _____

City _____ State _____ Zip/Postal Code _____

Country _____

Phone _____ E-mail _____

Priority Code: 8J-MIS-1Z

Please Answer The Following Questions:

Job Title *(check one)*

- ❏ Architect, Engineer, Consultant, Contractor (C17)
- ❏ Facilities Safety Officer (F14)
- ❏ Fire Chief, Other Fire Service (A11)
- ❏ Loss Control, Risk Manager (L11)
- ❏ Inspector, Building Official, Fire Marshal (F03)
- ❏ Owner, President, Manager, Administrator (C10)
- ❏ Other (please specify): (G11)_____

Type of Organization *(check one)*

- ❏ Architecture, Engineering, Contracting (A14)
- ❏ Commercial Firm (Office, Retail, Lodging, Restaurant) (G13)
- ❏ Electrical Services, Installation (J11)
- ❏ Fire Service, Public and Private (AA1)
- ❏ Government (C12)
- ❏ Industrial Firm (Factory, Warehouse) (C11)
- ❏ Institutional (Health Care, Education, Detention, Museums) (B11)
- ❏ Insurance, Risk Management (B12)
- ❏ Utilities (G12)
- ❏ Other (please specify): (G11)_____

4 Easy Ways to Join

Fax: 1-800-593-6372, Outside the U.S. +1-508-895-8301
Mail: NFPA Membership Services Center,
11 Tracy Drive, Avon, MA 02322-9908
Online: nfpa.org
Call: 1-800-344-3555
Outside the U.S. call +1-617-770-3000

6/12-D

Terms and Payment:

- ❏ 1 year ($165)
- ❏ 2 years ($300) SAVE $30
- ❏ 3 years ($430) SAVE $65

Annual membership dues include a $45 subscription to *NFPA Journal®*. Regular membership in NFPA is individual and non-transferable. NFPA Journal is a registered trademark of the National Fire Protection Association, Quincy, MA 02169. Voting privileges begin after 180 days of individual membership. Prices subject to change.

Payment Method:

Check One:

- ❏ Payment Enclosed *(Make check payable to NFPA.)*
- ❏ Purchase Order *(Please attach this form to your P.O.)*
- ❏ Bill Me Later *(Not available on International memberships.)*

Charge My: ❏ VISA ❏ MasterCard ❏ AmEx ❏ Discover

Card # _____

Expiration Date _____

Name on Card _____

Signature _____

International members: Please note prepayment is required on all International orders. Be sure to enclose a check or select your preferred credit card option.

100% Money-Back Guarantee

If anytime during your first year you decide membership is not for you, let us know and you'll receive a 100% refund of your dues.

Copyright 2013 National Fire Protection Association (NFPA). Licensed, by agreement, for individual use and single download via NFCSS All Access on June 6, 2013 to GATEWAY TECH COLLEGE for designated user 0171780. No other reproduction or transmission in any form permitted without written permission of NFPA. For inquires or to report unauthorized use, contact licensing@nfpa.org. This NFCSS All Access subscription expires on 12/31/2013.

"Member-Only" Benefits
Keeps You Up-To-Date!

FREE! Technical Support — Technical Support by Phone/Email. Get fast, reliable answers to all code-related questions—from electrical safety for employee workplaces to carbon dioxide extinguishing systems—from NFPA's team of fire protection specialists.

NFPA Journal® — THE journal of record for fire protection, this bi-monthly publication will keep you abreast of the latest fire prevention and safety practices, as well as new technologies and strategies for protecting life and property from fire.

NFPA Update — This easy-to-read monthly e-newsletter will keep you up-to-date on important association programs such as the annual meeting; bring you times of interest from NFPA's regional offices; and alert you to nationwide events and opportunities you won't want to miss.

NFPA News — From new standards for dry cleaning plants to warning equipment for household carbon monoxide, this monthly online update keeps you abreast of additions of changes that could impact how you do you work.

NFPA Standards Directory — The NFPA Standards Directory is your complete guide to NFPA's code-making process. Simply access your online NFPA member profile for document revision guidelines, the revision cycle schedule, and forms for submitting Proposals and Comments. Your online NFPA member profile and access to the NFPA Standards Directory is automatically generated once you join NFPA.

FREE! Section Membership — Share YOUR expertise with others in any of 16 industry-specific sections covering your own field of interest.

Member Kit — Includes Membership Certificate, Pin, Decals, ID Card, and Camera-ready Logo Art. Display the NFPA member logo proudly on your business correspondence, literature, website, and vehicles.

10% Discounts — Save hundreds of dollars each year on the many products and services listed in the NFPA Catalog, including codes and standards publications, handbooks, training videos, and other education materials to increase your knowledge and skills.

Voting Rights — Your chance to help shape the future direction of fire prevention codes and standards. Voting rights go into effect 180 days from the start of individual membership.

Conference Invitation— Invitation to the NFPA Conference and Expo. Attend this important meeting at discounted rates as a member of NFPA.

Join NFPA today!
www.nfpa.org

NFPA® and *NFPA Journal®* are registered trademarks of the National Fire Protection Association, Quincy, MA 02169-7471

Copyright 2013 National Fire Protection Association (NFPA). Licensed, by agreement, for individual use and single download via NFCSS All Access on June 6, 2013 to GATEWAY TECH COLLEGE for designated user 0171780. No other reproduction or transmission in any form permitted without written permission of NFPA. For inquires or to report unauthorized use, contact licensing@nfpa.org. This NFCSS All Access subscription expires on 12/31/2013.

Chapter 1

While there are several ways to provide the necessary water supply to a fire protection system, one of the most common includes private fire service mains. NFPA 24, *Standard for the Installation of Private Fire Service Mains and Their Appurtenances,* covers the requirements for this type of water supply piping, along with additional system components that are typically associated with underground piping. Designing private fire service mains properly is critical, as this is typically the first section of piping to carry water to a sprinkler or standpipe system after it leaves the municipal water mains. This standard covers the design, installation, and acceptance testing of these private service mains along with the fire hydrants that are connected to them.

It is important to note that this standard does not address municipal water supply piping, even if that piping is the source of the fire protection system water supply. For more information on designing and maintaining public service mains, the local plumbing code might need to be consulted. This is also true of public fire hydrants, which are also not covered by NFPA 24. The hydrants addressed in NFPA 24 are hydrants fed directly from private fire service mains. Testing and maintenance of public hydrants is not addressed in this standard.

1.1.1(7)

The scope of this standard establishes the requirements for the installation of private fire service mains, which distinguishes NFPA 24 from other standards that address public service mains, such as those published by the American Water Works Association (AWWA). An important distinction to remember is that NFPA 24 deals with the underground main once that pipe enters private property and becomes the responsibility of the building owner. See the definition of the term *private fire service main* in 3.3.11 and the accompanying annex text and commentary.

1.1.5

The requirements of NFPA 24 do not apply to public mains or to mains owned by private companies that operate as water utilities. The technical committee believes that it is unrealistic and unnecessary to expect some utilities to meet the requirements for listed pipe and 150 psi (10 bar) rated piping. NFPA 13D, *Standard for the Installation of Sprinkler Systems in One- and Two-Family Dwellings and Manufactured Homes,* and NFPA 13R, *Standard for the Installation of Sprinkler Systems in Low-Rise Residential Occupancies,* address underground piping supplying these systems.

1.2

The requirements of NFPA 24 were developed through the application of engineering principles, fire test data, and field experience. During its history of more than 100 years, the technical committees on automatic sprinkler systems have reviewed, analyzed, and evaluated system–related information and presented it in a useful form. As with any specialized subject, a good understanding of the basic principles as well as a continued effort to keep current with developing technologies is essential. NFPA 24 is a design and installation standard and not a how-to manual or a textbook.

1.3

A retroactivity clause appears in many NFPA codes and standards. Its main purpose in NFPA 24 is to reinforce the premise that any private service main and hydrant system installed in accordance with the applicable edition of NFPA 24 at the time of construction is considered to be in compliance with the standard for the system's lifetime, as long as no system modifications are made, the building is not significantly modified or updated, and the fire hazard presented by the occupancy or operational use remains unchanged.

1.4

An equivalency statement is included in many NFPA documents to allow for products and system arrangements that are not specifically covered by the standard to be used. However, the products or arrangements must demonstrate that they do not lower the level of safety provided by the standard or alter the standard's intent. Equivalencies are commonly used for private service mains when new materials or components come on to the market because of enhancements in technology. When a new material used for underground piping is manufactured and listed, it can often happen in between code cycles and the standard is silent on the usage of that material. An equivalency would allow a designer or installer to propose the use of that material to an AHJ, even though it is not explicitly addressed in NFPA 24.

Copyright 2013 National Fire Protection Association (NFPA). Licensed, by agreement, for individual use and single download via NFCSS All Access on June 6, 2013 to GATEWAY TECH COLLEGE for designated user 0171780. No other reproduction or transmission in any form permitted without written permission of NFPA. For inquires or to report unauthorized use, contact licensing@nfpa.org. This NFCSS All Access subscription expires on 12/31/2013.

Chapter 2

References Cited in Annotations

National Fire Protection Association, 1 Batterymarch Park, Quincy, MA 02169-7471.
NFPA 1, *Fire Code,* 2012 edition.
NFPA 13, *Standard for the Installation of Sprinkler Systems,* 2013 edition.
NFPA 13D, *Standard for the Installation of Sprinkler Systems in One- and Two-Family Dwellings and Manufactured Homes,* 2013 edition.
NFPA 13E, *Recommended Practice for Fire Department Operations in Properties Protected by Sprinkler and Standpipe Systems,* 2010 edition.
NFPA 13R, *Standard for the Installation of Sprinkler Systems in Low-Rise Residential Occupancies,* 2013 edition.
NFPA 14, *Standard for the Installation of Standpipe and Hose Systems,* 2010 edition.
NFPA 20, *Standard for the Installation of Stationary Pumps for Fire Protection,* 2013 edition.
NFPA 22, *Standard for Water Tanks for Private Fire Protection,* 2008 edition.
NFPA 70®, National Electrical Code®, 2011 edition.
NFPA 170, *Standard for Fire Safety and Emergency Symbols,* 2012 edition.
NFPA 291, *Recommended Practice for Fire Flow Testing and Marking of Hydrants,* 2013 edition.
NFPA 600, *Standard on Industrial Fire Brigades,* 2010 edition.
NFPA 1963, *Standard for Fire Hose Connections,* 2009 edition.
Cote, A. E., ed., *Fire Protection Handbook®*, 19th edition, 2003.
Hall, John R., Jr., "U.S. Experience with Sprinklers and Other Automatic Fire Extinguishing Equipment," Fire Analysis and Research Division, February 2010.

American Water Works Association, 6666 West Quincy Avenue, Denver, CO 80235.
ANSI/AWWA C104-08, *Standard for Cement–Mortar Lining for Ductile-Iron Pipe and Fittings,* 2008.
ANSI/AWWA C105-10, *Standard for Polyethylene Encasement for Ductile-Iron Pipe Systems,* 2010.
ANSI/AWWA C111-06, *Standard for Rubber-Gasket Joints for Ductile-Iron Pressure Pipe and Fittings,* 2006.
ANSI/AWWA C203-08, *Standard for Coal-Tar Protective Coatings and Linings for Steel Water Pipelines — Enamel and Tape — Hot Applied,* 2008.
ANSI/AWWA C900-07, *Standard for Polyvinyl Chloride (PVC) Pressure Pipe and Fabricated Fittings, 4 in. Through 12 in. (100 mm Through 300 mm), for Water Transmission and Distribution,* 2007.

Underwriters Laboratories Inc., 333 Pfingsten Road, Northbrook, IL 60062-2096.
UL 194, *Standard for Gasketed Joints for Ductile-Iron Pipe and Fittings for Fire Protection Service,* 2005.

U.S. Government Printing Office, Washington, DC 20402.
Title 29, *Code of Federal Regulations,* Part 1910.146, Appendix A.
Title 29, *Code of Federal Regulations,* Part 1926, Subpart P, Appendix F.

3.3.1

As used in NFPA 24, an appurtenance can be a hydrant, valve, monitor nozzle (for master streams), or a fire department connection (FDC).

3.3.2

Galvanized steel piping is corrosion resistant. However, this standard restricts the use of galvanized steel piping to FDCs. In constantly wet environments, such as those that exist in many underground installations, galvanized pipe can corrode and, therefore, is inappropriate for use. Piping intended for underground installation, such as polyvinyl chloride (PVC), high density polyethylene (HDPE), and fiber-reinforced epoxy pipe, is considered corrosion resistant.

3.3.3

Ferrous piping used for underground applications is frequently coated or wrapped with corrosion-resistant materials such as cement mortar lining, paint, epoxy, asphalt, or bituminous coatings. The external coatings can increase the survivability of the piping when buried. Some soil conditions can create a corrosive environment that can exceed the corrosion resistance of these coatings, and alternative materials, such as PVC or HDPE, should be considered.

3.3.4

Fire department connections were traditionally equipped with inlet sizes of 2½ in. (65 mm) for the connection of 2½ in. (65 mm) hose from the fire department pumper. Some fire depart-

Copyright 2013 National Fire Protection Association (NFPA). Licensed, by agreement, for individual use and single download via NFCSS All Access on June 6, 2013 to GATEWAY TECH COLLEGE for designated user 0171780. No other reproduction or transmission in any form permitted without written permission of NFPA. For inquires or to report unauthorized use, contact licensing@nfpa.org. This NFCSS All Access subscription expires on 12/31/2013.

ment connections are now equipped with nonthreaded connections in inlet sizes of 4 in. (102 mm) or 5 in. (125 mm) sizes. These nonthreaded connections are intended to couple hoses of the appropriate size where the hose connections comply with NFPA 1963, *Standard for Fire Hose Connections*.

3.3.5

Where the municipal water supply has insufficient flow or pressure to meet the demand of the fire protection system it is serving, it is not uncommon to use a fire pump to supplement that pressure. Fire pumps are not mandated by NFPA 13 or NFPA 24, but rather they are considered an option in meeting the demand for a system.

3.3.9.1

The residual pressure is measured when the flow hydrant is open and discharging through at least one outlet. This pressure is measured at the pressure or test hydrant when fire flow is occurring. See Exhibit 1.

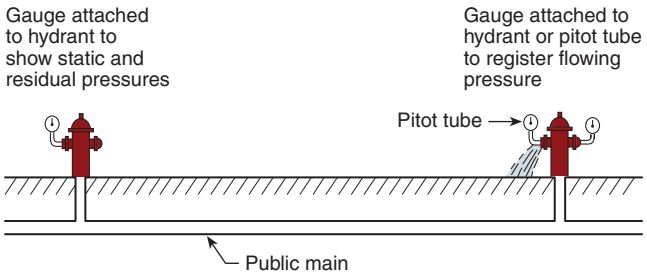

EXHIBIT 1 Method of Conducting Flow Tests. (Source: NFPA 13, 2013, Figure A.24.2.2)

3.3.9.2

Static pressure is the pressure measured at the pressure or test hydrant when no flow is occurring.

3.3.10

Pressure-regulating devices are valves normally used only when pressures in the system exceed those for which the system components are rated [usually 175 psi (12.1 bar)]. The exposure of a private fire service main to such high pressures is unusual, unless the private fire service main is located on the discharge side of a fire pump.

3.3.13

The rated capacity and color code of a hydrant, as covered in Chapter 5 of NFPA 291, *Recommended Practice for Fire Flow Testing and Marking of Hydrants,* are based on the flow available at a residual pressure of 20 psi (1.4 bar). While not restricted in NFPA 24, some jurisdictions restrict the use of pressures below 20 psi (1.4 bar), thus rating the hydrant at that pressure. By restricting the residual pressure to 20 psi (1.4 bar), problems such as drawing a vacuum on the main and inducing a backflow can be avoided. In some cases, a vacuum can cause the main to collapse, thus damaging the pipe.

3.3.14.1

When water supply flow test data are supplied, consideration should be given to the occurrence of changes in the water system since the test was last conducted, as such changes could affect the available waterflow and pressure. Examples of such changes are modifications to the distribution system or increased development in the general area, which would place a higher demand on the system. Evidence of rapid deterioration of the system due to tuberculation, microbiologically influenced corrosion (MIC), or other potential obstruction sources is another condition that could impact the test data. Flow test data must be no older than 1 year for the purposes of fire protection system design, as required by NFPA 13, *Standard for the Installation of Sprinkler Systems*; NFPA 14, *Standard for the Installation of Standpipe and Hose Systems*; and NFPA 20, *Standard for the Installation of Stationary Pumps for Fire Protection*.

Copyright 2013 National Fire Protection Association (NFPA). Licensed, by agreement, for individual use and single download via NFCSS All Access on June 6, 2013 to GATEWAY TECH COLLEGE for designated user 0171780. No other reproduction or transmission in any form permitted without written permission of NFPA. For inquires or to report unauthorized use, contact licensing@nfpa.org. This NFCSS All Access subscription expires on 12/31/2013.

3.3.14.2

Dirt, rocks, and other obstructing material can enter piping during installation, creating a potential obstruction for sprinklers and valves. For this reason, the flushing test is intended to be conducted prior to connecting the underground system to any aboveground system.

3.3.14.3

The hydrostatic test is a "stress" test for the system to reveal leaks prior to placing the system in service.

3.3.15.2

All NFPA installation standards for fire protection systems require that all valves on fire protection systems be indicating valves. Because the leading cause of sprinkler system failure is due to a shut valve (over 35 percent according to the NFPA report, "U.S. Experience with Sprinklers and Other Automatic Fire Extinguishing Equipment"), indicating valves are required for all systems so that an inspector can easily determine whether the valve is open or closed.

3.4.1.1

A dry barrel hydrant is used in climates where freezing weather occurs. As the name suggests, the barrel or body of the hydrant does not contain water. When the operating nut on top of the hydrant is used to open the hydrant, the barrel is flooded with water. A small drain is located at the bottom of the hydrant, and, once the hydrant is closed, it should drain completely of water within 60 minutes. See Exhibit 2 for a typical dry barrel hydrant.

3.4.1.3

A private hydrant may or may not have a 4 in. (100 mm) connection. For most installations, it is not desirable to have a 4 in. (100 mm) connection on a private hydrant, since a large waterflow drawn from hydrants located near a building could have a negative impact on the performance of the building fire protection systems.

EXHIBIT 2 Dry Barrel Hydrant.

Copyright 2013 National Fire Protection Association (NFPA). Licensed, by agreement, for individual use and single download via NFCSS All Access on June 6, 2013 to GATEWAY TECH COLLEGE for designated user 0171780. No other reproduction or transmission in any form permitted without written permission of NFPA. For inquires or to report unauthorized use, contact licensing@nfpa.org. This NFCSS All Access subscription expires on 12/31/2013.

3.4.1.4

Public hydrants are normally found on sidewalks or on the side of public streets or roads. These hydrants can be color coded to indicate their flow capacity at 20 psi (1.4 bar) residual pressure.

3.4.1.6

Sometimes referred to as the "California hydrant," the wet barrel hydrant is used in climates that do not experience freezing temperatures. As the name suggests, the barrel is wet or full of water to the outlet caps. Each outlet has its own valve mechanism and can be independently controlled. See Exhibit 3 for a typical wet barrel hydrant.

EXHIBIT 3 Wet Barrel Hydrant.

4.1.1

By submitting plans before installation, the designer and installing contractor avoid making later modifications to installed equipment based on the review by the authority having jurisdiction (AHJ). A permit to install such equipment is required in most jurisdictions.

4.1.3

The sprinkler system design process, including the underground supply piping and hydrants, is continually changing in response to new technology and market conditions. Generally, plans are prepared primarily by the installing contractor, but more owners and authorities having jurisdiction are now requiring that plans be prepared by licensed fire protection engineers and that the plans be included in the building plan submittal for approval.

The use of building information modeling (BIM) has led to greater coordination of all building elements, including the fire protection systems. This coordination requires more up-front design effort that often results in preparation of sprinkler construction drawings prior to selection of the installing contractor.

Copyright 2013 National Fire Protection Association (NFPA). Licensed, by agreement, for individual use and single download via NFCSS All Access on June 6, 2013 to GATEWAY TECH COLLEGE for designated user 0171780. No other reproduction or transmission in any form permitted without written permission of NFPA. For inquires or to report unauthorized use, contact licensing@nfpa.org. This NFCSS All Access subscription expires on 12/31/2013.

The growing trend toward the design/build delivery method has also impacted the design process. When projects are completed using this method, the general contractor is responsible for both the project design and construction. The design team is selected by the general contractor along with the construction subcontractors. The design professionals work together with the installing contractors to prepare the construction documents.

4.2.2
Most jurisdictions will require a contractor or the owner to pull a permit before conducting work on an existing private service main. However, where such action is not required, it is important to discuss work being done on the system with not only the municipality but also the water purveyor if they are different entities. Work performed on an existing system can lead to unintended backflow into municipal water supplies where there is not appropriate "control" of the system.

5.1.2
Alternative methods of determining pressure at a public water supply could include calculations that modify the effective point of a nearby flow test or the use of modeling. Any alternative methods are required to be approved by the AHJ.

5.2.1
Pipes smaller than 6 in. (152 mm) do not permit the full flow capabilities for the hydrant.

5.2.2
When private fire service mains supply water to a fire pump, the pipe size should be in accordance with Table 4.26(a) and Table 4.26(b) in NFPA 20, *Standard for the Installation of Stationary Pumps for Fire Protection*. The intent of pipe sizing in these tables is to limit water velocity to not more than 15 ft/sec (4.57 m/sec).

Private fire service main piping supplying standpipe systems should be sized in accordance with NFPA 14.

5.3.1
The requirement in 5.3.1 is intended to discourage the use of high pressures in a water supply piping system and permits the use of a pressure regulating device only with the approval of the

Copyright 2013 National Fire Protection Association (NFPA). Licensed, by agreement, for individual use and single download via NFCSS All Access on June 6, 2013 to GATEWAY TECH COLLEGE for designated user 0171780. No other reproduction or transmission in any form permitted without written permission of NFPA. For inquires or to report unauthorized use, contact licensing@nfpa.org. This NFCSS All Access subscription expires on 12/31/2013.

AHJ. See Exhibit 4 for an example of a pressure reducing valve.

The piping and fittings for private fire service mains are required by 10.1.5 to be rated for a pressure of at least 150 psi (10 bar). Pressures in excess of this value in a private fire service main are unusual and should be avoided by the system designer. The 150 psi (10 bar) pressure limitation is allowed to be exceeded when a fire pump is supplying pressure to private fire service mains. In such a case, pipe and fittings rated for the higher pressure are necessary.

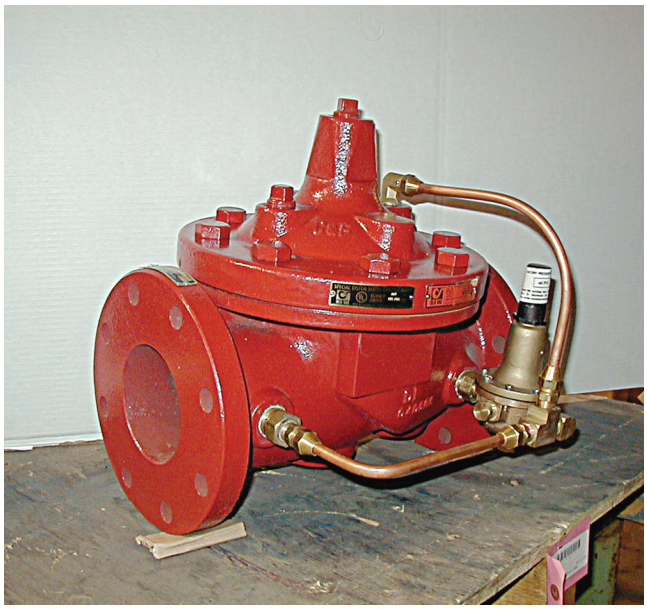

EXHIBIT 4 Pressure Reducing Valve.

5.3.2

As a means for quantifying the amount of water used from a suppression system and fire hydrants, many water purveyors require meters to be installed on private service mains. These meters will impact the flow and pressure of the piping, which must be taken into account in the hydraulic calculations.

5.4.2

The situations that follow illustrate the need for a backflow prevention device. A backflow prevention device (double-check or reduced pressure type) is intended to protect the public water supply at the water user connection for the following situations:

1. The public water system serves water user premises where the fire protection system is directly supplied from the public water system and an auxiliary non-potable water supply is on the premises (tank) or is accessible to the premises (open reservoir) that is not part of the public water system.
2. The public water system serves water user premises where the fire protection system is supplied from the public water system and where either elevated, non-potable water storage tanks, or fire pumps that take suction from private reservoirs or tanks, are on the user's premises.

In situation 1, when the FDC is used, it is possible that a higher pressure exists in the system than is being supplied from the public water system through the FDC, and a backflow situation can occur. This can result in the fire protection water in the system flowing into the public wa-

Copyright 2013 National Fire Protection Association (NFPA). Licensed, by agreement, for individual use and single download via NFCSS All Access on June 6, 2013 to GATEWAY TECH COLLEGE for designated user 0171780. No other reproduction or transmission in any form permitted without written permission of NFPA. For inquires or to report unauthorized use, contact licensing@nfpa.org. This NFCSS All Access subscription expires on 12/31/2013.

ter supply. Since fire protection systems are not sanitized for human consumption, protection against backflow conditions by means of a backflow preventer is often required. Exhibit 5 illustrates the correct location for the installation of a backflow preventer.

In situation 2, either an elevated tank or a fire pump can pressurize a fire protection system so that a higher pressure exists in the system than in the water supply. Again, this case also creates the potential for a backflow and subsequent contamination of the public water supply.

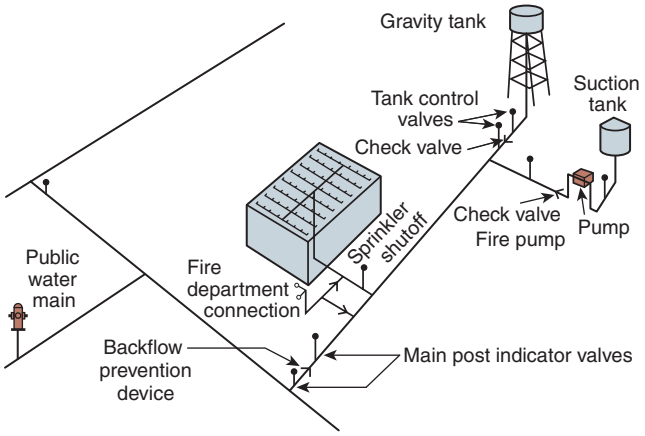

EXHIBIT 5 Typical Layout of a Water Supply System with Backflow Preventer for Automatic Sprinkler Systems. (Source: NFPA 13E, 2010, Figure A.4.2)

5.5

There are many arrangements that satisfy the performance requirement of providing a safe way to turn off water to public water systems. See 6.2.11 for these methods.

Copyright 2013 National Fire Protection Association (NFPA). Licensed, by agreement, for individual use and single download via NFCSS All Access on June 6, 2013 to GATEWAY TECH COLLEGE for designated user 0171780. No other reproduction or transmission in any form permitted without written permission of NFPA. For inquires or to report unauthorized use, contact licensing@nfpa.org. This NFCSS All Access subscription expires on 12/31/2013.

5.8

A proper evaluation should be conducted before selecting a natural body of water to supply a fire protection system. Screens and strainers may remove larger obstructing material but do not remove mud or sediment. Fire protection strainers typically have ⅛ in. (3 mm) mesh size openings in the strainer basket, which are too large to remove fine particulate matter. See Exhibit 6 for an illustration of a typical fire protection strainer. Sprinkler systems that are supplied from natural sources of water must be installed with return bends or goosenecks to prevent the settlement of mud or other sediment in the bottom of the sprinkler drop, which obstructs the sprinkler orifice. See Exhibit 7 for an illustration of a return bend.

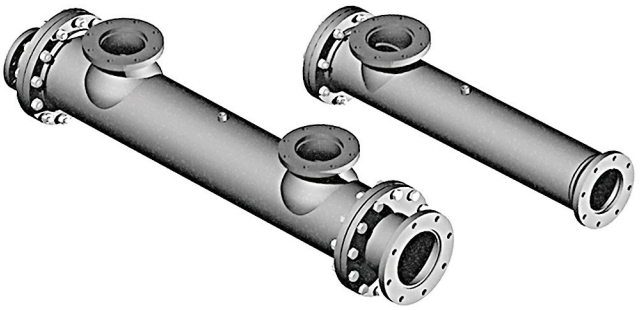

EXHIBIT 6 Fire Protection Strainer.

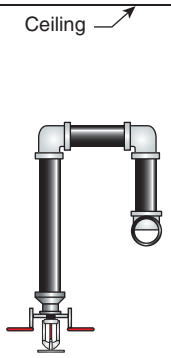

EXHIBIT 7 Return Bend Arrangement. (Courtesy of Stephan Laforest, Summit Sprinkler Design Systems, Inc.)

Copyright 2013 National Fire Protection Association (NFPA). Licensed, by agreement, for individual use and single download via NFCSS All Access on June 6, 2013 to GATEWAY TECH COLLEGE for designated user 0171780. No other reproduction or transmission in any form permitted without written permission of NFPA. For inquires or to report unauthorized use, contact licensing@nfpa.org. This NFCSS All Access subscription expires on 12/31/2013.

5.9.1

The FDC may serve more than one building. The underground piping, as illustrated in Figure A.3.3.11, can be pressurized through the FDC, and, therefore, some guidelines on the design and installation of the FDC are provided in Section 5.9. See Exhibit 8 for an illustration of a freestanding FDC supplying an underground private fire service main.

EXHIBIT 8 Freestanding FDC.

5.9.1.1

The AHJ in this case is typically the local fire department. Since the local fire department is the end user, the fire marshal or the equivalent authority should be consulted for the location and number of FDCs needed.

5.9.1.5

NFPA 24 historically has required fire hydrants that are in a location subject to mechanical damage to have protection. In the 2013 edition of the standard, this concept was expanded to include fire department connections (FDCs) as well. Where FDCs are located near truck docks or other areas where materials may be moved and placed along the exterior wall of the building, it is not uncommon for the fire department connection to be damaged. This damage can often go unnoticed until a fire event occurs and the fire department is trying to connect to the broken FDC.

Copyright 2013 National Fire Protection Association (NFPA). Licensed, by agreement, for individual use and single download via NFCSS All Access on June 6, 2013 to GATEWAY TECH COLLEGE for designated user 0171780. No other reproduction or transmission in any form permitted without written permission of NFPA. For inquires or to report unauthorized use, contact licensing@nfpa.org. This NFCSS All Access subscription expires on 12/31/2013.

5.9.2.4

When selecting a fire department connection coupling, it is important that the thread type used matches that of the local fire department. Ideally, all fire departments would use the same hose threads, but this is not the case in all areas of the United States or in certain countries. Paragraph 5.9.2.4 provides some flexibility for jurisdictions that use threads or connections other than the national standard. See Exhibit 9 for an illustration of a nonthreaded hose connection.

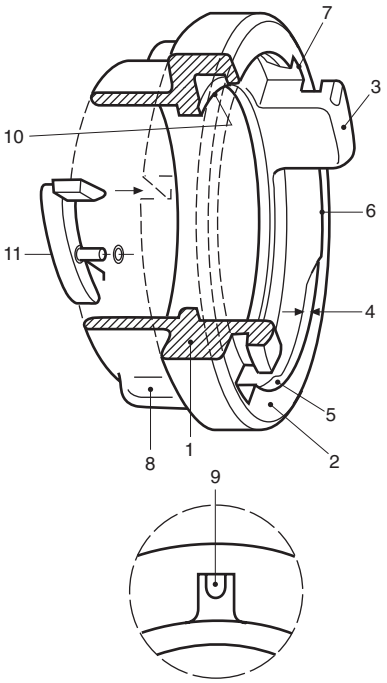

Legend:

1. Circumferential O.D.: The largest outer diameter of connection that protects the connection from damage.
2. Coupling face: The front part of the connection from which dimensions are developed.
3. Internal lug: The two internal lugs with recesses that fit on the ramp under the face of the cam head.
4. Ramp: The inclined plane under the face of the cam head that, when turned clockwise, increases pressure on lip seals.
5. Lug stop: The stop at the end of the ramp that the internal lug comes against.
6. Lug recess: Recessed area where opposite internal lugs enter the ramp.
7. Cleaning port: Area on end of connection face where dirt is pushed in by mating lug.
8. External wrenching lug: The external ribs or lugs on back diameter of connection head.
9. External wrenching lug indicator: The identification on rib or lug that, when lined up together, indicates the connection is fully engaged.
10. Tail place recess: The recess counterbore on the interface of the cam head that the tail piece rides in.
11. Lock: To keep the connection from becoming unintentionally disengaged.

EXHIBIT 9 Diagram of a Nonthreaded Hose Connection. (Source: NFPA 1963, 2009, Figure A.6.1)

Copyright 2013 National Fire Protection Association (NFPA). Licensed, by agreement, for individual use and single download via NFCSS All Access on June 6, 2013 to GATEWAY TECH COLLEGE for designated user 0171780. No other reproduction or transmission in any form permitted without written permission of NFPA. For inquires or to report unauthorized use, contact licensing@nfpa.org. This NFCSS All Access subscription expires on 12/31/2013.

5.9.3.2

Due to the presence of the check valve in the FDC, a shutoff valve is not needed. Installing a shutoff valve where it is not needed could increase the likelihood that the valve will be closed (rendering the FDC unusable) when needed.

5.9.4.1

For freestanding FDCs, the requirement in 5.9.4.1 presents a problem. Usually the check valve in a freestanding FDC is buried, or it might be installed in a valve pit. If installed in a valve pit, the usual method of draining, which is a ball-drip valve, can be used. See Exhibit 10 for a typical freestanding FDC pit arrangement.

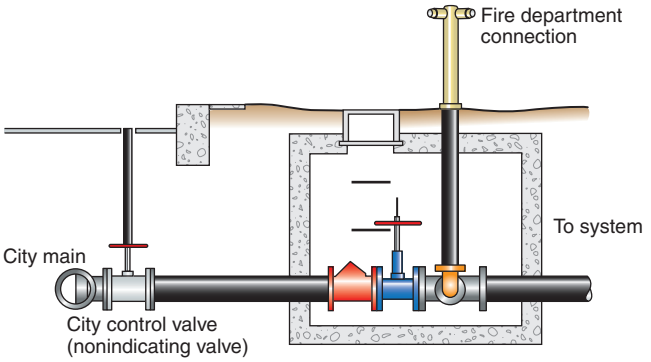

EXHIBIT 10 Pit for Gate Valve, Check Valve, and Fire Department Connection. (Courtesy of Stephan Laforest, Summit Sprinkler Design Systems, Inc.)

5.9.5.1

Careful consideration should be given to the location of FDCs that supply a standpipe system or combined sprinkler/standpipe system. NFPA 14 requires that an FDC be located within 100 ft (30.5 m) of a hydrant. When designing a private fire service main, the designer should consider this requirement when determining the relative location of FDCs and the hydrants intended to supply them.

5.9.5.2

A clearance of 4 ft (1.2 m) is recommended to be maintained around all FDCs in order to permit fire fighters to connect and use FDCs. Protective bollards should also not be located within the recommended 4 ft (1.2 m) radius. See Exhibit 11 for a recommended FDC arrangement.

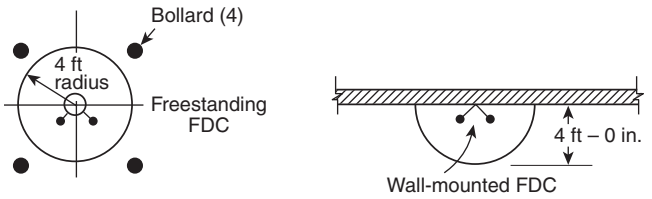

EXHIBIT 11 Recommended Arrangement for an FDC.

6.1.1

All valves controlling fire protection systems must be listed indicating valves. As mentioned in the commentary to 3.3.15.2, a shut valve is the leading cause of system failure. The status of an indicating valve (open or shut) can be determined quickly and easily by visual observation of the indicator.

Copyright 2013 National Fire Protection Association (NFPA). Licensed, by agreement, for individual use and single download via NFCSS All Access on June 6, 2013 to GATEWAY TECH COLLEGE for designated user 0171780. No other reproduction or transmission in any form permitted without written permission of NFPA. For inquires or to report unauthorized use, contact licensing@nfpa.org. This NFCSS All Access subscription expires on 12/31/2013.

6.1.2

The requirement in 6.1.2 is intended to reduce the possibility of water hammer or pressure surge in the system when water is flowing. A water hammer condition sounds like knocking in the pipes and is caused by quickly stopping the flow of water, which results in a sharp increase in pressure. Water hammer can briefly raise the pressure in the system beyond the pressure rating of the system components, which may result in damage or leaks.

6.1.4

Although the valves specified in 6.1.3 and 6.1.4 are permitted to be nonindicating valves, attachments are needed to provide an indication of their status. A post indicator valve (PIV) indicates its "open" or "shut" status through a window in the body of the post. See Exhibit 12 for a typical PIV.

EXHIBIT 12 Post Indicator Valve (PIV).

6.1.5

Although a nonindicating valve with a roadway box is permitted by 6.1.5, this design should be avoided, since it offers no easy means of inspection or indication of the valve status. Additionally, access to these valves can be blocked by vehicles, or the box can get paved over or filled with sand. In areas subject to freezing, the roadway box can fill with water and freeze, rendering it inoperable.

6.2.1

The requirement for listed indicating valves has been eliminated in the 2013 edition of NFPA 24 to allow tapping sleeve and nonindicating valve assemblies to qualify as meeting the intent of 6.2.1.

Copyright 2013 National Fire Protection Association (NFPA). Licensed, by agreement, for individual use and single download via NFCSS All Access on June 6, 2013 to GATEWAY TECH COLLEGE for designated user 0171780. No other reproduction or transmission in any form permitted without written permission of NFPA. For inquires or to report unauthorized use, contact licensing@nfpa.org. This NFCSS All Access subscription expires on 12/31/2013.

6.2.2

In the 2010 edition of NFPA 13, annex material was added to clarify that the "no shutoff valve requirement" applied to the fire department connection piping. See Figures A.8.17.2.4.4(a) and A.8.17.2.4.4(b) in the 2010 edition of NFPA 13. Some AHJs felt that this new requirement in NFPA 13 meant that there could be no shutoff valve downstream of the fire department connection throughout the entire system. The language added to NFPA 24 above clarifies that shutoff valves can be provided downstream of the FDC, simply not between the FDC and the connection to system piping.

6.2.5

The installation of two valves on each side of a check valve allows the check valve to be isolated for internal inspection, maintenance, or repair while the second water source remains in service.

6.3.2

Ideally, the PIV should be installed in a location where it can be surrounded by a 4 ft (1.2 m) radius for proper access and to allow for the rotation of the handle. Bollards for mechanical protection should fall outside of the 4 ft (1.2 m) radius.

6.4.2

The term *readily accessible* has been removed from this section and replaced with the word accessible. Valve pits must be designed to be *accessible* for ITM activities at all times. The term *readily accessible* was often misconstrued to mean that the valve pit could be made accessible when needed for an ITM task to be completed. If the owner or inspector needed to do some work to the valve pit to make it accessible, then it is not inherently accessible, so the term *readily accessible* did not add any value to this section.

6.6.1

The 2013 edition of NFPA 24 has been modified to include specific language to address the maximum number of connections allowed before a sectional valve is required. It was common practice to include these valves at increments of four to six connections; therefore, the technical committee established six connections as the maximum number. A connection can be a hydrant or a fire protection lead-in to a building. The purpose of a sectional control valve is to ensure the ability to isolate a segment of the underground main for maintenance or repair while impacting as few systems as possible. For locations with an underground loop that is provided with sectional valves, a common practice when sizing the underground pipe is to assume the shorter leg of the loop is out of service. This ensures that the system is capable of supplying the fire protection demand even when a portion of the underground loop is out of service. Exhibit 13 is an example of a private fire service main that has been divided into segments by valves A, B, C, E, and F.

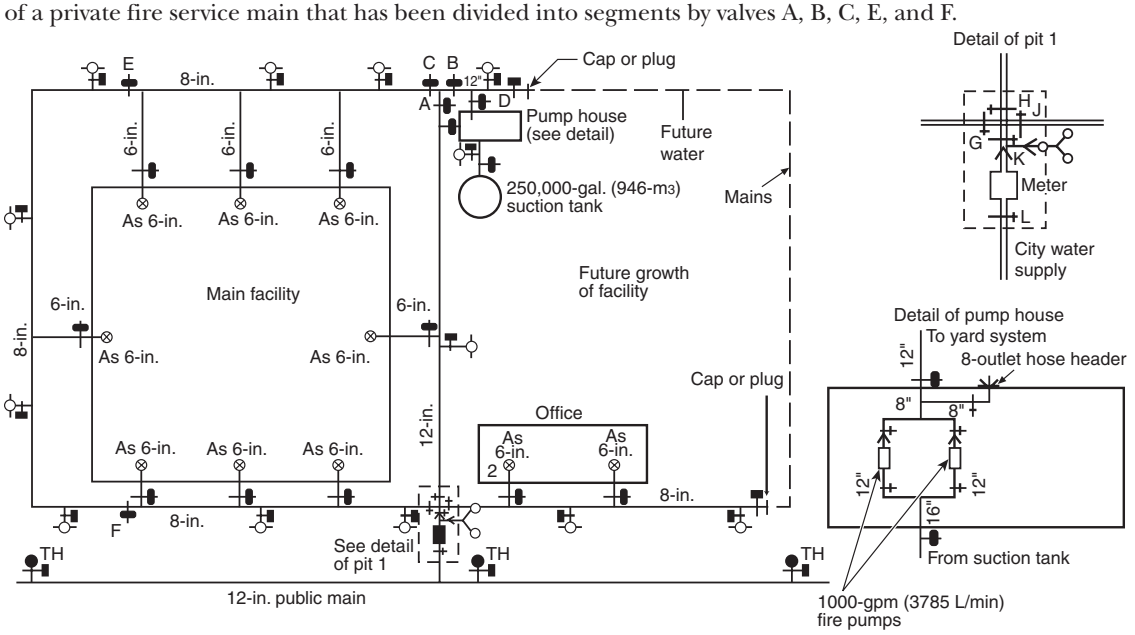

EXHIBIT 13 Water Piping for Fire Protection of an Industrial Site. (Source: *Fire Protection Handbook®*, NFPA, 2003, Figure 10.3.30)

Copyright 2013 National Fire Protection Association (NFPA). Licensed, by agreement, for individual use and single download via NFCSS All Access on June 6, 2013 to GATEWAY TECH COLLEGE for designated user 0171780. No other reproduction or transmission in any form permitted without written permission of NFPA. For inquires or to report unauthorized use, contact licensing@nfpa.org. This NFCSS All Access subscription expires on 12/31/2013.

6.7.1

The graphical symbol for the valve function that follow is from NFPA 170 and can be used to fulfill this sign requirement.

Automatic Sprinkler Control Valve

7.1.1.1.1

Historically, there was no requirement mandating a maximum distance that the valve could be located from the hydrant. This made it difficult sometimes to locate a roadway box when it might have been covered with dirt, sod, or some other material. This new mandated distance narrows the search area when a valve has been covered.

7.1.1.1.2

In some instances, locating the valve within 20 ft (6.1 m) of the hydrant does not make the most sense, which is why the AHJ can approve an alternate location in excess of 20 ft (6.1 m) from the hydrant. On example would be an isolation valve for a hydrant on a 300 ft (91.4 m) dead end run of pipe. In this instance, the best location for an isolation valve would be close to the tee-off from the main line as it would isolate for both a broken hydrant and broken line without impairing the rest of the system. With the valve 20 ft (6.1 m) from the hydrant, the other 280 ft (85.3 m), which only serves the hydrant, potentially exposes the rest of the system to failure. In these instances, the designer should submit an alternate location to the AHJ for approval.

7.2.1

Section 18.4 and Annex E of NFPA 1, *Fire Code,* provide guidance on the number and location of hydrants. The AHJ may require that specific local issues regarding the location of hydrants must be met.

7.2.3

Hydrants in parking areas or in any area in which they are exposed to potential damage should be protected by bollards on all sides. The bollards should not be closer than 4 ft (1.2 m) to the protected hydrant. When located near a roadway, the hydrant should be placed within 6 ft (1.8 m) of the pavement, unless the AHJ determines another location is more acceptable.

7.3.1

In cold climates, the hydrant barrel is expected to drain within 60 minutes. Where soil conditions do not permit this drainage, or where groundwater is above the hydrant drain, some jurisdictions have allowed the hydrant drain to be plugged and provisions made for pumping out the barrel after each use.

7.3.3

It is recommended that the center of the hose outlet not be more than 36 in. (914.4 mm) above final grade [see Figure A.7.3.1(b)].

8.1.1

It is intended that this equipment be provided only where a trained industrial fire brigade is present. Industrial fire brigades should be trained in accordance with NFPA 600, *Standard on Industrial Fire Brigades.*

Copyright 2013 National Fire Protection Association (NFPA). Licensed, by agreement, for individual use and single download via NFCSS All Access on June 6, 2013 to GATEWAY TECH COLLEGE for designated user 0171780. No other reproduction or transmission in any form permitted without written permission of NFPA. For inquires or to report unauthorized use, contact licensing@nfpa.org. This NFCSS All Access subscription expires on 12/31/2013.

9.1

Some standards may specify higher flows for master streams. Monitor nozzles are available that can provide a master stream flow of 250 gpm to 2000 gpm (946 L to 7570 L) or more. See Exhibit 14 for typical master stream equipment.

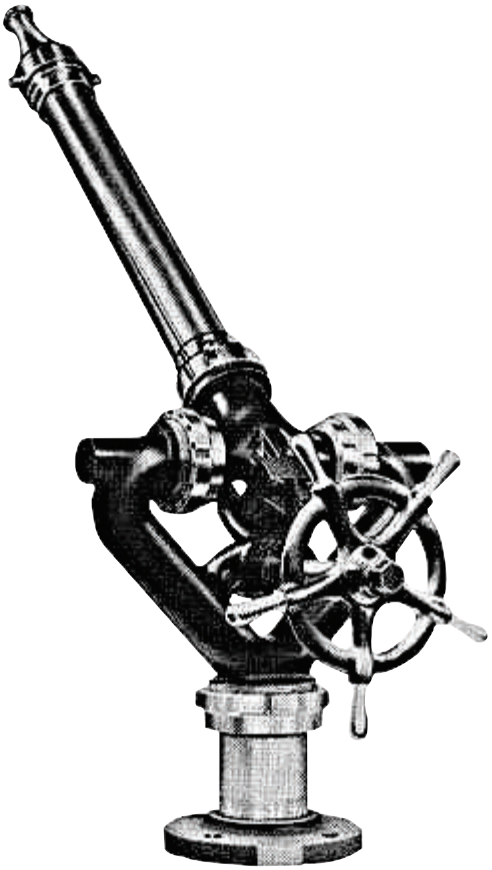

EXHIBIT 14 Master Stream Equipment. (Courtesy of Potter Electric Signal Company, LLC)

10.1.2

Past experience and loss data indicate that a high potential exists for failure of buried steel pipe, even where the pipe is externally coated and wrapped and is internally galvanized. The integrity of the coating, wrapping, and galvanizing can be easily compromised in many underground applications. Accordingly, steel pipe can no longer be installed for general underground service, unless it is specially listed for the purpose. At this time, no such listings are available.

10.1.3

Steel pipe can be used for piping to an FDC because the FDC is an auxiliary, rather than a primary, water supply for the sprinkler system. Both coating and wrapping are required when internally galvanized steel pipe is used underground between an exterior FDC and the check valve where it connects to the system. Coating is also required for clamps, tie rods, and all bolted joint accessories. (See 10.3.6.2 and 10.8.3.5.)

ANSI/AWWA C203-08, *Standard for Coal-Tar Protective Coatings and Linings for Steel Water Pipelines — Enamel and Tape — Hot Applied*, is a standard for coating materials referenced in Table 10.1.1, but other bituminous (coal-tar) coatings are available in the marketplace.

ANSI/AWWA C105-10, *Standard for Polyethylene Encasement for Ductile-Iron Pipe Systems*, another of the standards referenced in Table 10.1.1, provides useful installation guidance where wrap-

Copyright 2013 National Fire Protection Association (NFPA). Licensed, by agreement, for individual use and single download via NFCSS All Access on June 6, 2013 to GATEWAY TECH COLLEGE for designated user 0171780. No other reproduction or transmission in any form permitted without written permission of NFPA. For inquires or to report unauthorized use, contact licensing@nfpa.org. This NFCSS All Access subscription expires on 12/31/2013.

ping is required. The standard basically requires that high density polyethylene tubes or sheets with a minimum nominal thickness of 0.004 in. (0.1 mm), or low density polyethylene tubes or sheets with a minimum nominal thickness of 0.008 in. (0.2 mm), be used for the wrapping.

10.1.5

Underground mains can and should have rated working pressures in excess of 150 psi (10 bar) where the system underground is expected to experience pressures in excess of 150 psi (10 bar). The 2010 edition of NFPA 24 was revised to recognize that an underground main may have working pressures in excess of 150 psi (10 bar). Higher-rated piping may be needed on the discharge side of the pump for the private fire service mains.

10.1.6

Nominal diameters of available, listed, lined ferrous metal pipe range from 3 in. to 24 in. (75 mm to 600 mm). Ductile iron pipe is generally cement mortar–lined in accordance with ANSI/AWWA C104-08, *Standard for Cement–Mortar Lining for Ductile-Iron Pipe and Fittings.* Cement mortar linings were first used with cast-iron pipe in 1922 and help prevent tuberculation of ferrous pipe through the creation of a high pH at the pipe wall, as well as by providing a physical barrier to the water. The minimum thickness of the lining is 1/16 in. (1.6 mm) for pipe sizes 3 in. to 12 in. (75 mm to 300 mm) nominal diameter and is greater for larger-diameter pipe.

Care should be taken in using hydraulic calculations of underground piping, since manufacturers generally do not include the thickness of linings when providing information on the internal diameters of their piping products. Therefore, when calculating underground lined piping, it is imperative that the actual internal diameter, accounting for any lining material, be utilized throughout the calculations.

10.1.6.2

The word internally was added to this section to clarify that the lining being addressed is on the interior of the pipe. Some users of the standard have been incorrectly using the requirement in this section to eliminate external coatings that are required by 10.1.3.

10.2

Section 10.2 was rearranged in the 2013 edition to put the requirements on buried fittings at the beginning of the section since Chapter 10 is dealing with underground or buried equipment.

10.3

Although 10.2.1 and 10.3.1 simply require that buried joints be approved and that buried fittings be of an approved type, acceptable joining methods for listed piping are generally controlled as part of the pipe listing. Both ductile iron and PVC pipe are generally joined by bell and spigot ends in conjunction with rubber gaskets or by listed mechanical joints. A simple rubber gasket joint is termed a *push-on joint.* In the case of a push-on joint, a single rubber ring gasket is fitted into the recess of a bell end of a length of pipe and is compressed by the plain end of the entering pipe, forming a seal. The gasket and the annular recess are specially shaped to lock the gasket in place against displacement. ANSI/AWWA C111-06, *Standard for Rubber-Gasket Joints for Ductile-Iron Pressure Pipe and Fittings,* one of the standards referenced in Table 10.1.1, requires that lubricants used in conjunction with push-on joints be labeled with the trade name or trademark and the pipe manufacturer's name to ensure compatibility with gasket material.

10.4

Buried piping must be located below the frost line to prevent freezing during the winter months. The piping must also be located deep enough to be protected from other surface loads that could cause mechanical damage. Piping located under driveways, roads, and railroad tracks must be buried deeper to prevent undue loads on the sprinkler piping.

10.6.1

When buildings are built over existing underground piping, the piping should be rerouted around the new building for the following reasons, among others:

- Piping located under buildings is extremely difficult to repair, which is one of the reasons that 10.6.1 limits the installation of pipe under buildings. When piping under buildings requires repair, operations in the building must be curtailed, equipment may need to be moved, and the floor must be excavated.

Copyright 2013 National Fire Protection Association (NFPA). Licensed, by agreement, for individual use and single download via NFCSS All Access on June 6, 2013 to GATEWAY TECH COLLEGE for designated user 0171780. No other reproduction or transmission in any form permitted without written permission of NFPA. For inquires or to report unauthorized use, contact licensing@nfpa.org. This NFCSS All Access subscription expires on 12/31/2013.

- Leaks in the buried piping underneath the building can go undetected for long periods, water can surface inside and damage building contents, and leaks can also undermine the building support.
- System control valves need to be located in the center of a building, which is highly undesirable during a fire.

10.6.2(3)

Previous editions of NFPA 24 provided guidance on measures that could be taken to more safely run pipe underneath buildings; however, there was no requirement for specific approval by the AHJ. The revised language in 10.6.1 and 10.6.2 establishes that pipe should not be run under buildings unless the AHJ has specifically approved the piping configuration and the means of limiting the impact of the building sitting above the pipe.

Subsection 10.6.2 outlines some of the measures that can be taken to minimize, but not entirely eliminate, exposure to damage. Where the main passes beneath the foundation wall, arching of the foundation wall over the main should be accomplished, or another means of ensuring system and structural integrity should be provided.

10.6.3

Subsection 10.6.3 permits a riser lead-in main to run underneath the building's footing or to penetrate the foundation wall if the main rises through the floor slab within 10 ft (3 m) of the building exterior wall.

10.6.8

The use of underground fire protection piping for electrical grounding increases the potential for stray ground currents and increased galvanic corrosion, which is why such use is prohibited by 10.6.8. Grounding to piping systems that may have nonconductive piping or joints is especially dangerous, since it may not provide the expected ground. In no case should the underground piping be used as a grounding electrode for electrical systems. Electrical equipment should be grounded in accordance with *NFPA 70®*, *National Electrical Code®*.

10.7

The precautions that must be taken to minimize damage to underground piping, eliminate stresses, and ensure a long service life are outlined in Section 10.7.

In the United States, the federal Occupational Safety and Health Administration (OSHA) has a number of requirements relating to safety issues involved in underground piping installation. These OSHA regulations can be found in 29 CFR 1926, Subpart P, on excavations and 29 CFR 1910.146 on confined spaces.

For trenching operations, sloping, shoring, or shielding of the trench may be required. Soil classification is needed to select the correct options. In the absence of soil classification, sloping of the excavation wall can be performed, with the slope limited to 1½ horizontal to 1 vertical, which is a maximum 34 degrees from horizontal.

Copyright 2013 National Fire Protection Association (NFPA). Licensed, by agreement, for individual use and single download via NFCSS All Access on June 6, 2013 to GATEWAY TECH COLLEGE for designated user 0171780. No other reproduction or transmission in any form permitted without written permission of NFPA. For inquires or to report unauthorized use, contact licensing@nfpa.org. This NFCSS All Access subscription expires on 12/31/2013.

Confined space entry procedures often must be employed when access to control valves located in pits is needed. For this reason, control valves are brought above ground in areas where freezing is not a concern, and special prefabricated heated enclosures (see Exhibit 15) are available to allow aboveground valve installations in areas subject to freezing.

EXHIBIT 15 Heated Enclosure. (Courtesy of AquaSHIELD)

10.7.4

Precautions must be taken to prevent rocks and other foreign materials from entering piping during installation. These materials can be carried into fire protection system piping and cause obstructions and system failure during a fire. The precautions taken during installation are important but do not eliminate the need to flush the piping as part of the acceptance testing. Exhibit 16 shows debris flushed out of underground piping.

EXHIBIT 16 Debris Flushed Out of Underground Piping. (Courtesy of FM Global)

10.8

Section 10.8 addresses the need to restrain pipe movement caused by hydraulic pressure or dynamic thrust forces created by water changing direction as it flows through the pipe. Thrust blocks are provided at piping direction changes (elbow, bend, and tee fittings) to prevent unrestrained pipe joints from separating, and to prevent pipe movement in soft soil.

Copyright 2013 National Fire Protection Association (NFPA). Licensed, by agreement, for individual use and single download via NFCSS All Access on June 6, 2013 to GATEWAY TECH COLLEGE for designated user 0171780. No other reproduction or transmission in any form permitted without written permission of NFPA. For inquires or to report unauthorized use, contact licensing@nfpa.org. This NFCSS All Access subscription expires on 12/31/2013.

10.8.2

Thrust blocks are covered in 10.8.2. Exhibit 17 illustrates a typical thrust block arrangement.

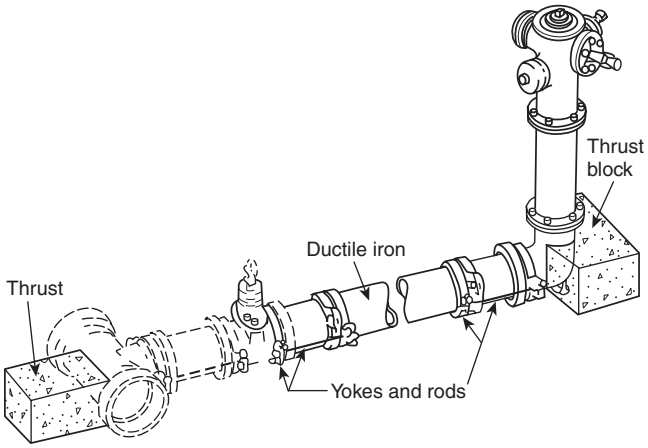

EXHIBIT 17 Thrust Block Arrangement. (Courtesy of Los Angeles Department of Water and Power)

10.8.3(6)

Any one of the restraining systems listed in 10.8.3 is considered an acceptable means of restraining a joint. Flange adapter fittings and other mechanical joints do not necessarily provide joint restraint. For example, flange adapter fittings are listed by Underwriters Laboratories as "fittings, retainer type" in UL 194, *Standard for Gasketed Joints for Ductile-Iron Pipe and Fittings for Fire Protection Service*. UL 194 further categorizes such fittings as either "gasketed joints with self-restraining feature" or "gasketed joints without self-restraining feature." The latter includes gasketed joints consisting of merely a pipe or fitting bell and a spigot end without a feature for joint restraint. Under the provisions of UL 194, all gasketed joints are provided with a pressure test at twice the rated working pressure, with their joints deflected to the maximum angle specified by the manufacturer. Joints for which the manufacturer claims a self-restraining feature are not provided with external restraint during the test. The manufacturer's literature should specify whether external restraint is required. An example of a restrained joint system is shown in Exhibit 18.

Rods and clamps can be used as an alternative to the restrained joint systems shown in Figure A.10.8.3.

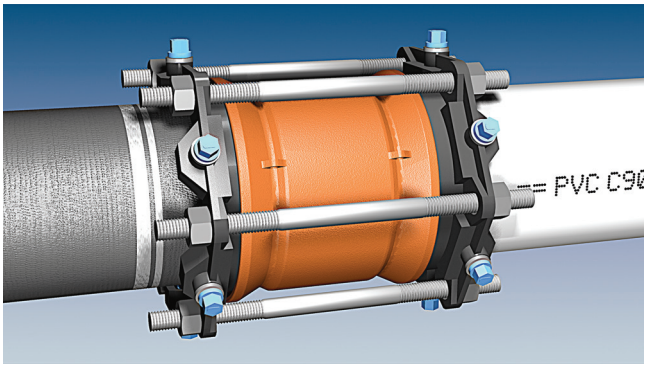

EXHIBIT 18 Restrained Joint System. (Courtesy of EBAA Iron, Inc.)

Copyright 2013 National Fire Protection Association (NFPA). Licensed, by agreement, for individual use and single download via NFCSS All Access on June 6, 2013 to GATEWAY TECH COLLEGE for designated user 0171780. No other reproduction or transmission in any form permitted without written permission of NFPA. For inquires or to report unauthorized use, contact licensing@nfpa.org. This NFCSS All Access subscription expires on 12/31/2013.

10.9.1

Improper backfill is a major cause of underground piping failures. Proper consolidation of backfill can prevent voids that eventually place stress on the piping and joints.

Underground piping should be laid on a firm bed of earth for its entire length, with the earth scooped out at the joints. Clean earth or screened gravel should be tamped under and around the pipe and above the pipe to a level of 1 ft (0.3 m). The excavation should then be backfilled to grade, compacting the fill layers in the trench as they are added. Puddling, which involves the use of water to help consolidate soil around and below the piping, is occasionally used to assist the backfill compaction effort.

10.9.2

Subsection 10.9.2 prohibits the placement of rocks in trenches. Clean fill cushions the pipe and evenly distributes the load to the surrounding earth. The presence of cinders, refuse, and other organic matter can create points of accelerated corrosion that can reduce the life of underground piping.

10.10.2.1.3(3)

In some cases, the fire protection water supply may not be capable of producing the flows listed in Table 10.10.2.1.3. If the flow is not available, a flow equal to or greater than the fire protection system's maximum demand should be used.

Stones, gravel, blocks of wood, bottles, work tools, work clothes, and other objects have been found in piping when flushing procedures were performed. Objects in underground piping that are quite remote from a sprinkler installation — and that would otherwise remain stationary — can sometimes be carried into sprinkler system piping when sprinkler systems operate. Sprinkler systems can draw greater flows than most domestic or process uses. Fire department pumpers taking suction from hydrants for pumping into sprinkler systems and normal fire-fighting operations further increase flow rates and velocities and can dislodge other materials in the piping network, forcing them into sprinkler system piping.

Due to the inherent nature of sprinkler system design in which pipe sizes usually decrease beginning at the point of connection to the underground piping, objects that move from the underground piping into the sprinkler system can become lodged at a point in the system where they may obstruct the passage of water. Exhibit 19 illustrates material captured while flushing an underground main.

Studies by FM Global concluded that the size of objects that move upward in piped water streams can be determined if the density of the object and the velocity of the water stream are known. For example, granite that is 2 in. (51 mm) in diameter will move upward in piping if the water stream velocity is 5.64 ft/sec (1.72 m/sec). The flow rates in Table 10.10.2.1.3 reflect velocities of approximately 10 ft/sec (3.1 m/sec), which is generally agreed upon as a reasonably fast flow capable of removing most obstructing debris.

Copyright 2013 National Fire Protection Association (NFPA). Licensed, by agreement, for individual use and single download via NFCSS All Access on June 6, 2013 to GATEWAY TECH COLLEGE for designated user 0171780. No other reproduction or transmission in any form permitted without written permission of NFPA. For inquires or to report unauthorized use, contact licensing@nfpa.org. This NFCSS All Access subscription expires on 12/31/2013.

EXHIBIT 19 Pipe Scale (Rust) and Work Gloves Found When Flushing an Underground Main. (Courtesy of John Jensen)

10.10.2.2

The trench must be backfilled prior to hydrostatic testing to prevent movement of underground piping. The backfilling can take place between joints if it is desired to observe the joints for leakage and if the backfill depth is sufficient to prevent movement. As an alternative, the joints can also be covered, but the contractor remains responsible for locating and correcting excessive leakage.

A 2-hour hydrostatic test is required at not less than 200 psi (13.8 bar) and at not less than 50 psi (3.5 bar) above the maximum expected static pressure. The piping between an exterior fire department connection and the check valve in the connection's inlet pipe must also be hydrostatically tested. All thrust blocks should be hardened before testing takes place.

Allowable leakage rates during hydrostatic testing are based on the total length and diameter of the underground piping. In the past, the allowable leakage had been based on the number of gaskets or joints, regardless of pipe diameter.

When underground piping is repaired, it should be tested as a new installation is tested, but it is not required that all the underground piping be subjected to the hydrostatic test if it can be isolated. Blind flanges or skillets can be used for this purpose. Procedures must be implemented to ensure that these devices are removed following hydrostatic testing.

10.10.2.2.1

The removal of all air from the system piping when conducting the hydrostatic test is extremely important. Air in the piping causes a fluctuation in the test pressure. Any time the test pressure drops below the minimum specified [200 psi (13.8 bar), or 50 psi (3.5 bar) in excess of the system working pressure], the test must be repeated and the correct pressure held for the 2-hour duration.

Copyright 2013 National Fire Protection Association (NFPA). Licensed, by agreement, for individual use and single download via NFCSS All Access on June 6, 2013 to GATEWAY TECH COLLEGE for designated user 0171780. No other reproduction or transmission in any form permitted without written permission of NFPA. For inquires or to report unauthorized use, contact licensing@nfpa.org. This NFCSS All Access subscription expires on 12/31/2013.

10.10.2.2.3(2)

Note that the gauge is required to be located at the lowest portion of the system. If located at the highest portion of the system, in some cases, an excessively high test pressure would result in the lower portions of the system. These high pressures could cause failure of some system components.

10.10.2.2.4

Backfilling the trench between the pipe joints helps keep the pipe in place while the trench (or the piping) is being filled and pressurized.

10.10.2.2.6

Using equation 10.10.2.2.6(a), if testing 350 ft of a 10 in. main at an average of 203 psi during the duration of the test,

$$L = \frac{(350)(10)\sqrt{203}}{148{,}000}$$

L = 0.3369 gph (from Table 10.10.2.2.6: 0.096 gph loss is permitted per 100 ft of pipe.)

$$0.096 \times 3.5 = 0.336 \text{ gph}$$

When testing 350 ft of 10 in. pipe at an average test pressure of 203 psi, a total of 0.67 gal of water is permitted to be lost.

10.10.2.4.1

Exercising the hydrant in this fashion should be done annually after the hydrant is placed into service. Threaded outlets should be lubricated and checked for burrs or potential cross-threading at this time.

10.10.2.4.2

The hydrant should completely drain within 60 minutes.

10.10.2.4.3

PIVs should be opened completely until pressure is felt in the connecting rod. This pressure is an indication that the rod is still connected to the valve. Additional pressure should be exerted on the handle at this time and then suddenly released to determine if the handle "springs" back. The spring indicates that the valve is fully open and verifies that the gate is still attached to the handle. If the gate were jammed, it would be unlikely for the handle to spring back. If the gate were loose or detached from the handle, the handle would continue to turn with little or no resistance.

Post indicator and gate valves should be turned back one-quarter turn from the fully open position to prevent jamming.

10.10.2.5.2

In addition to the forward flow test, local regulations may require a backflow test at the time of the forward flow test. The backflow test should also be documented and submitted to the building owner along with the contractor's material and test certificate.

Chapter 11

When calculating friction loss through underground piping, the Hazen–Williams formula must be used. This formula is easily converted to table format to simplify the calculation process. The C value used must correspond to those listed in Commentary Table 1.

Copyright 2013 National Fire Protection Association (NFPA). Licensed, by agreement, for individual use and single download via NFCSS All Access on June 6, 2013 to GATEWAY TECH COLLEGE for designated user 0171780. No other reproduction or transmission in any form permitted without written permission of NFPA. For inquires or to report unauthorized use, contact licensing@nfpa.org. This NFCSS All Access subscription expires on 12/31/2013.

COMMENTARY TABLE 1 Hazen–Williams C Values*

Pipe or Tube	*C Value**
Unlined cast iron or ductile iron	100
Black steel (dry systems including preaction)	100
Black steel (wet systems including deluge)	120
Galvanized (all)	120
Plastic (listed) all	150
Cement-lined cast iron or ductile iron	140
Copper tube or stainless steel	150
Asbestos cement	140
Concrete	140

*The authority having jurisdiction is permitted to consider other *C* values.
Source: NFPA 13, 2013, Table 23.4.4.7.1

A.3.2.2
The term *authority having jurisdiction* is that person or office enforcing the standard. In cases where the standard is to be legally enforced, the authority having jurisdiction is usually a fire marshal or building official. It is common for multiple authorities having jurisdiction to review the same project and have responsibility for enforcing this standard and other standards. In many cases where NFPA 24 is utilized, the insuring agency for the facility may have requirements that differ from or exceed the requirements contained in NFPA 24. For all designs and applications, communication with all of the appropriate authorities having jurisdiction is important to determine the proper criteria.

A.3.3.11
Figure A.3.3.11 shows a typical private fire service main arrangement that is fed from a public water supply. As shown in the figure, the piping becomes the property of the building owner at the point where the pipe crosses from public to private land. The transition from public to private has implications for acceptance testing, because public mains and accessories are tested to a different standard and a different hydrostatic pressure. This difference in testing standards can create problems in the field when the private main needs to be tested and isolated from the public main. The two mains must be separated by a valve that holds the higher pressure, which is sometimes difficult, because the isolation valve on the public main may not be rated for the test pressure.

Also, in Figure A.3.3.11, note that a fire pump is supplied by a private fire service main. The requirements in NFPA 24 for pipe, fittings, and valves are frequently used to design and install a water supply that serves a fire pump. NFPA 24 requirements are used for a variety of piping arrangements, including the following:

- Direct connection from a public supply to a fire pump, as illustrated in Figure A.3.3.11
- Piping between a private water tank and a fire pump
- Piping from a fire pump to one or more buildings in a multi-building complex

A.4.1
When designing the piping layout, tees with blind flanges and isolation valves should be considered to accommodate future expansion. An increase in the pipe diameter should be considered in order to permit additional waterflow from future expansions.

Copyright 2013 National Fire Protection Association (NFPA). Licensed, by agreement, for individual use and single download via NFCSS All Access on June 6, 2013 to GATEWAY TECH COLLEGE for designated user 0171780. No other reproduction or transmission in any form permitted without written permission of NFPA. For inquires or to report unauthorized use, contact licensing@nfpa.org. This NFCSS All Access subscription expires on 12/31/2013.

A.5.1.2

In the 2013 edition of NFPA 24, the waterflow adjustments have been moved from the body of the document to Annex A for consistency with NFPA 13. Water supplies should be evaluated for all of the conditions listed in A.5.1.2. The water supply test should be conducted during normal business hours to include the effects of simultaneous business and industrial demand. The possibility of future expansion should be discussed with the AHJ and accounted for in the system demand, since expansion can be expected to create additional demand on the water supply.

A.5.9.5.3(2)

It is recommended that the sign required in 5.9.5.3 include a graphic representation of the type of FDC provided in NFPA 170, *Standard for Fire Safety and Emergency Symbols,* as follows*:*

FDC — Automatic Sprinkler System

FDC — Standpipe System Fire Department

FDC — Combined Automatic Sprinkler/Standpipe System

A.10.1.1

Underground pipe must meet either of the following criteria:

1. It must be listed for fire protection service.
2. It must comply with the American Water Works Association (AWWA) or ASTM International standards specified in Table 10.1.1.

The issue of listing or compliance with AWWA or ASTM had caused some confusion but was resolved in the 2010 edition following the issuance of a formal interpretation in 2007 clarifying that certain types of products, such as cross-linked polyethylene, chlorinated polyvinyl chloride (CPVC), and fiberglass, are acceptable based on listings alone.

Although several of the standards listed in Table 10.1.1 address steel pipe, flanges, welding, and installation, steel pipe is not permitted to be used in underground fire protection service, with the exception of FDCs or unless specially listed for such service. (See 10.1.2 and 10.1.3.)

Although the only plastic pipe included in Table 10.1.1 is PVC pipe manufactured in accordance with ANSI/AWWA C900-07, *Standard for Polyvinyl Chloride (PVC) Pressure Pipe and Fabricated Fittings, 4 in. Through 12 in. (100 mm Through 300 mm), for Water Transmission and Distribution,* listings are available for PVC with nominal diameters up to 30 in. (750 mm). Listings are also available for CPVC in sizes ¾ in. to 3 in. (20 mm to 75 mm) and for fiberglass-wound epoxy pipe in sizes 2 in. through 20 in. (50 mm through 500 mm) nominal diameter.

An often overlooked materials issue is that most nonmetallic underground piping brought up through the floor of a building could be vulnerable to fire exposure or spills of corrosive liquids. Regardless of material type, a section of underground pipe is allowed to extend above the floor level up to a maximum of 24 in. (600 mm). (See 6.3.1.1.1 in NFPA 13.) The requirement in 24.1.6.1 of NFPA 13 provides additional guidance on the transition from underground to aboveground piping and the need to protect the transition piece from damage. Possible methods for protecting the exposed section of underground pipe are to encase it in concrete, provide curbing, or provide a barrier.

A.10.6.3.1

Even where locating risers adjacent to exterior walls is not practical, 10.6.3 nevertheless requires pipe runs to be minimized. NFPA 24 does not require a fire main of 10 ft (3 m) or less located under a building that connects to a system riser to be accessible through trench plates or other

Copyright 2013 National Fire Protection Association (NFPA). Licensed, by agreement, for individual use and single download via NFCSS All Access on June 6, 2013 to GATEWAY TECH COLLEGE for designated user 0171780. No other reproduction or transmission in any form permitted without written permission of NFPA. For inquires or to report unauthorized use, contact licensing@nfpa.org. This NFCSS All Access subscription expires on 12/31/2013.

means of access, but, in accordance with the requirements of 10.6.2, this access is considered good practice. The alternative offered in 10.6.3.1 is provided to allow for the installation of sprinklers when the preferred options in 10.6.1 through 10.6.3 are not practical.

A.10.8.2

The soil bearing strength value to be used for sizing thrust blocks is the horizontal bearing strength, which is shown in Table A.10.8.2(b). Vertical bearing strength values are often determined for purposes of structural support but are not necessarily the same as vertical bearing strength values.

Table A.10.8.2(c) provides a simplified approach to calculating the required bearing area. The tabular areas are based on the simple conditions indicated in the note to the table, and ratios can simply be applied for conditions other than 90-degree bends, 100 psi maximum pressure, and soil horizontal bearing strength of 1000 psi/ft^2, as indicated in the example following the notes to the table.

The following is a sample calculation to determine the size of a thrust block using the formula in A.10.8.2(5), Figure A.10.8.2(b), and Table A.10.8.2(b):

Design parameters: 12 in. ductile iron pipe (A) = 136.8 in.^{2}
45-degree bend (θ)
85 psi water pressure at bend (P)
Soil type = sandy silt
Safety factor (S_f) = 1.5
Block height (h) = 1.5 ft

The cross-sectional area of the pipe is determined by the following formula:

$$A = 36\pi(D')^2$$

where:
D' = outside diameter of the pipe (ft)

Therefore:
$A = 36\pi(1.1)^2$
$A = 136.8$ in.^{2}

Using the formula in A.10.8.2(5):

$$b = \left(\frac{2(1.5)(85)(136.8)\sin(45/2)}{(1.5)(3000)}\right)$$

$$b = \frac{13325.688}{4500}$$

$$b = 2.96 \text{ ft}$$

Note that the result of 2.96 ft is consistent with A.10.8.2(4) in that the block base (b = 2.96 ft) is between 1 to 2 times the height (h = 1.5 ft). This method is the correct method for selecting the size and shape of a thrust block.

Copyright 2013 National Fire Protection Association (NFPA). Licensed, by agreement, for individual use and single download via NFCSS All Access on June 6, 2013 to GATEWAY TECH COLLEGE for designated user 0171780. No other reproduction or transmission in any form permitted without written permission of NFPA. For inquires or to report unauthorized use, contact licensing@nfpa.org. This NFCSS All Access subscription expires on 12/31/2013.

Annex C

In preparation for the flow test, which is performed using the guidelines from NFPA 291, *Recommended Practice for Fire Flow Testing and Marking of Hydrants,* several aspects of the water supply system should be reviewed. To avoid what could be a costly mistake, a designer or an RDP should review civil underground piping plans, if available, and identify the correct main and hydrants to be used during the flow test. If civil plans are unavailable at the time of, or prior to, the performance of the flow test, the local water district should be contacted for details. Underground mains might be supplied from different sources. For example, one main may be supplied by a municipal pumping station, while another is supplied from a municipal water tank; hydrants might be on a dead-end main, or the mains may vary in pipe size. All of these circumstances can produce different flow test results. If the incorrect underground main and hydrants are used for flow test readings, any insufficient flows and pressures might remain undiscovered until late in the project or during final testing.

It is important to note that, in accordance with the requirements of NFPA 13, *Standard for the Installation of Sprinkler Systems,* and NFPA 20, *Standard for the Installation of Stationary Pumps for Fire Protection,* waterflow tests must be performed within 12 months of submitting a working plan. Of course, it is possible that, due to restrictive waterflow conditions in several areas, the authority having jurisdiction (AHJ) may require or allow older, previously recorded flow test data to be used. Alternatively, the AHJ may allow the use of a waterflow analysis provided by the water district or approved consulting agency in lieu of a flow test. It is also a good practice to acquire previous flow test information from the local water district; this practice provides a means of comparing the current results to previous outcomes and assists in determining the accuracy of current results and/or highlights possible deficiencies. If substantial variations are observed, it might be a good indicator that more research into the water supply system is needed. One contributing factor could be the time of the flow test; ensuring that flow test results are taken during peak demand times can avoid shortfalls in system designs.

If the results of the flow test show a static pressure similar to that of the previous test, but show a large decrease in residual pressure and flow, several possible causes should be considered or investigated. A valve in the underground system might be partially closed, or a portion of a municipal grid system might be partially or completely shut down. The underground mains could have extreme degradation (corrosion and sedimentation buildup), depending on the age of the system, or there could be a large obstruction in the piping system. These are just some examples of the possible causes of reduced residual pressure and flow. Regardless of the cause, any problem needs to be resolved before the system designer or the RDP can proceed with the design of the system. Simply performing a flow test does not automatically ensure that accurate flow data is being used during design, and the results of using innacurate data could lead to expensive corrections at or near the end of the project.

The system designer or RDP should take into account the age of the project area and any future development that could affect the water supply over time. If an area is slated for a large industrial development, and initial flow test results are sufficient to meet the system demand requirements of the initial building, a very real possibility exists that supply will fall short of demand as additional structures are added to the water supply demand.

If flow test results show insufficient water supply, the use of a fire pump is a viable solution. Since a fire pump cannot create waterflow, a water source having a positive head is required. The supply can come from a municipal supply main to which an on-site fire supply line is designed and installed in accordance with NFPA 24, *Standard for the Installation of Private Fire Service Mains and Their Appurtenances.* In addition, if on-site fire hydrants are located on the onsite fire supply line, NFPA 1, *Fire Code*, provides fire flow requirements. Another possible water source could be a private fire supply, such as a tank designed and installed in accordance with NFPA 22, *Standard for Water Tanks for Private Fire Protection.*

As has been explained, different scenarios can exist that lead the system designer or the RDP to the conclusion that a specific project requires a fire pump. For example, the city supply might be capable of providing sufficient flow but could lack the pressure required to meet the demands of a standpipe system at the upper floors of a high-rise building; or the pressure, however adequate for ordinary systems, might be insufficient to meet the high-pressure demands of extra hazard occupancies or early suppression fast response (ESFR) sprinkler systems.

Copyright 2013 National Fire Protection Association (NFPA). Licensed, by agreement, for individual use and single download via NFCSS All Access on June 6, 2013 to GATEWAY TECH COLLEGE for designated user 0171780. No other reproduction or transmission in any form permitted without written permission of NFPA. For inquires or to report unauthorized use, contact licensing@nfpa.org. This NFCSS All Access subscription expires on 12/31/2013.

C.4.1.3

The minimum pressure required by many water authorities is 20 psi (1.4 bar). Pressures less than 20 psi (1.4 bar) may create vacuum conditions in the water system piping in areas of the water system that are located at higher elevations relative to the location of the flow. This can cause possible collapse of the piping or introduce groundwater contamination through leak points in the piping. Low pressures such as 20 psi (1.4 bar) can also cause a backflow of non-potable water through check valves, which can contaminate a potable source. While fire apparatus can operate at such low pressures, the minimum net positive suction head (NPSH) of the pump needs to be maintained, or the pump will not perform well, and damage due to cavitation can occur.

C.4.2.1

"A period of ordinary demand" should include testing during normal business hours and during seasons of high usage or low storage levels, such as summertime. Note that water supply test data obtained at times of high use and used to size a fire pump can result in overpressure problems. During periods of low demand, the available pressure can be considerably higher than at periods of high demand. If pressures fluctuate such that excessively high pressures (i.e., pressures that exceed the rated working pressure system components) risk causing system damage, measures must be taken to control these high pressures. Possible options for controlling excessive pressure include use of a break tank or variable speed fire pump. Chapter 4 of NFPA 20 addresses the proper applications of these options. NFPA 20 does allow the use of the fire pump main relief valve as a means of addressing excess fire pump suction pressure.

C.4.3.2

In addition to the considerations specified in C.4.3.2, the local environmental authority may need to be consulted regarding the disposal of chlorinated or non-potable test water.

C.4.3.3

The exact effective point of the flow test will be located where the nonflowing water in the piping supplying the hydrant at which the residual pressures are being measured meets the flowing water in the underground piping. In all cases, as shown in Figure C.4.3.4, this effective point is where the supply piping of the residual pressure hydrant, "R," meets the underground main.

C.4.3.4

The residual hydrant should also be the hydrant closest to the property to be protected. This simplifies the hydraulic calculations needed to "move" the water test effective point from the location of the test to the base of the sprinkler or standpipe riser in the protected property.

C.4.3.6

In order to produce a pressure drop of 25 percent, or the total fire demand, multiple outlets on the flowing hydrant may need to be opened during the test. In some cases, this may require that several hydrants be flowed simultaneously to produce a sufficient pressure drop and/or flow.

C.4.4.2

Each calibrated gauge should be identified by a sticker from the company or person performing the calibration that indicates the date of the last calibration. Gauges can lose their calibration over time; therefore, it is recommended that recalibration be completed a minimum of every 12 months.

C.4.4.3

Some hydrants may be located several hundred feet apart; therefore, portable radios are needed for proper communication. Testing personnel need to communicate so that measurements can be taken at the appropriate time. For example, when hydrants are fully opened, residual pressures should be taken.

Copyright 2013 National Fire Protection Association (NFPA). Licensed, by agreement, for individual use and single download via NFCSS All Access on June 6, 2013 to GATEWAY TECH COLLEGE for designated user 0171780. No other reproduction or transmission in any form permitted without written permission of NFPA. For inquires or to report unauthorized use, contact licensing@nfpa.org. This NFCSS All Access subscription expires on 12/31/2013.

C.4.4.4

A stream straightener helps to improve the accuracy of the pressure reading but does not diffuse the energy of the water stream. In addition to improving the accuracy of test results, there are devices available that incorporate a diffuser that breaks up the energy of the water stream, improves the safety of the test personnel, and helps avoid property damage. Exhibit 20 illustrates the use of a diffuser.

EXHIBIT 20 Flow Diffuser in Use During a Hydrant Flow Test.

C.4.5.4

Before attaching test equipment to any hydrant, the hydrant should be flushed to remove any debris within the hydrant barrel. Debris from the hydrant barrel can damage test gauges or pitot tubes. After flushing, the test equipment can be attached to the hydrant and the air bled off. At this point in the test, data such as date, time of day, weather conditions, and static pressure should be recorded. Exhibit 21 illustrates flushing of the residual hydrant and shows the site for attachment of test equipment.

Exhibit 21 Flushing of Residual Hydrant (left) and Attachment of Test Equipment (right).

Copyright 2013 National Fire Protection Association (NFPA). Licensed, by agreement, for individual use and single download via NFCSS All Access on June 6, 2013 to GATEWAY TECH COLLEGE for designated user 0171780. No other reproduction or transmission in any form permitted without written permission of NFPA. For inquires or to report unauthorized use, contact licensing@nfpa.org. This NFCSS All Access subscription expires on 12/31/2013.

C.4.5.10

Closing a hydrant too quickly can cause damage in the system from pressure surges and can cause sprinkler system alarm valves or flow switches to operate, causing nuisance alarms.

C.4.6.4

The pitot tube should be positioned at the one-half diameter position referenced in 4.6.3 and maintain the centerline of the pitot tube orifice at a right angle to the plane of the hydrant outlet. Exhibit 22 illustrates the pitot tube opening or slot for correct positioning of the pitot tube in the water stream when using a diffuser.

EXHIBIT 22 Diffuser — Slot for Pitot Tube Insertion.

C.4.6.6

Pitot readings of less than 10 psi (0.7 bar) and more than 30 psi (2.0 bar) can affect the accuracy of the readings and should be avoided.

C.4.7.1

Determining the appropriate coefficient for a fire hydrant is a critical step that is often missed in the field. Assigning the wrong coefficient to a hydrant when performing calculations can lead to drastically inaccurate results.

C.4.10.1

To determine the discharge flow, the pitot pressure, along with the outlet diameter and coefficient, must be known. The pitot pressure measured during the flow test in Exhibit 23 is 50 psi (3.5 bar). From Table 4.10.1(a) and Table 4.10.1(b), a pitot pressure of 50 psi (3.5 bar) is 1319 gpm (4992 L/min) theoretical flow. After applying the outlet coefficient of 0.9, the actual flow measured during this flow test is 1187 gpm (4493 L/min).

C.4.10.1.2

Applying the formula in 4.10.1.2, the total flow measured during the test is as previously calculated: 1187 gpm (4493 L/min). The pressure drop to the desired pressure in this case is 55 psi (3.8 bar) [75 psi – 20 psi = 55 psi (5.2 bar – 1.4 bar = 3.8 bar)]. The pressure drop measured during the test was 23 psi (1.6 bar) [75 psi – 52 psi = 23 psi (5.2 bar – 3.6 bar = 1.6 bar)]. The result of this calculation predicts a flow of 1901 gpm (7195.3 L/min) when the residual pressure is drawn down to the minimum recommended 20 psi (1.4 bar). As stated in 4.1.1, the ratings and uniform marking of hydrants should be based on a residual pressure of 20 psi (1.4 bar). Therefore, the rating for the hydrant in this example should be based on a flow of 1901 gpm (7195.3 L/min), not the 1187 gpm (4493 L/min) measured during the test.

Copyright 2013 National Fire Protection Association (NFPA). Licensed, by agreement, for individual use and single download via NFCSS All Access on June 6, 2013 to GATEWAY TECH COLLEGE for designated user 0171780. No other reproduction or transmission in any form permitted without written permission of NFPA. For inquires or to report unauthorized use, contact licensing@nfpa.org. This NFCSS All Access subscription expires on 12/31/2013.

FLOW TEST REPORT

Date: 6/2/10

Inspector: John Doe

Residual hydrant location: Main Street (see map on p. 2)

Flow hydrant location: " "

Static pressure (residual hydrant): 75 psi

Residual pressure (residual hydrant): 52 psi

Pitot pressure (flow hydrant): 50 psi

Nozzle size (flow hydrant): 2.5 in.

From Table 4.10.1(a) of NFPA 291, *Recommended Practice for Fire Flow Testing and Marking of Hydrants*, 2010 edition: 1319 gpm

Nozzle coefficient (flow hydrant): 0.9

1319 × 0.9 = 1187

Available water flow: 1187 gpm at 52 psi

Compute discharge:

$Q_R = Q_F \times h_r^{0.54} / h_f^{0.54}$

$Q_R = 1187 \times (55)^{0.54} / (23)^{0.54}$

$Q_R = 1901$ gpm at 20 psi

EXHIBIT 10 Sample Flow Test Report *(Continues)*.

Copyright 2013 National Fire Protection Association (NFPA). Licensed, by agreement, for individual use and single download via NFCSS All Access on June 6, 2013 to GATEWAY TECH COLLEGE for designated user 0171780. No other reproduction or transmission in any form permitted without written permission of NFPA. For inquires or to report unauthorized use, contact licensing@nfpa.org. This NFCSS All Access subscription expires on 12/31/2013.

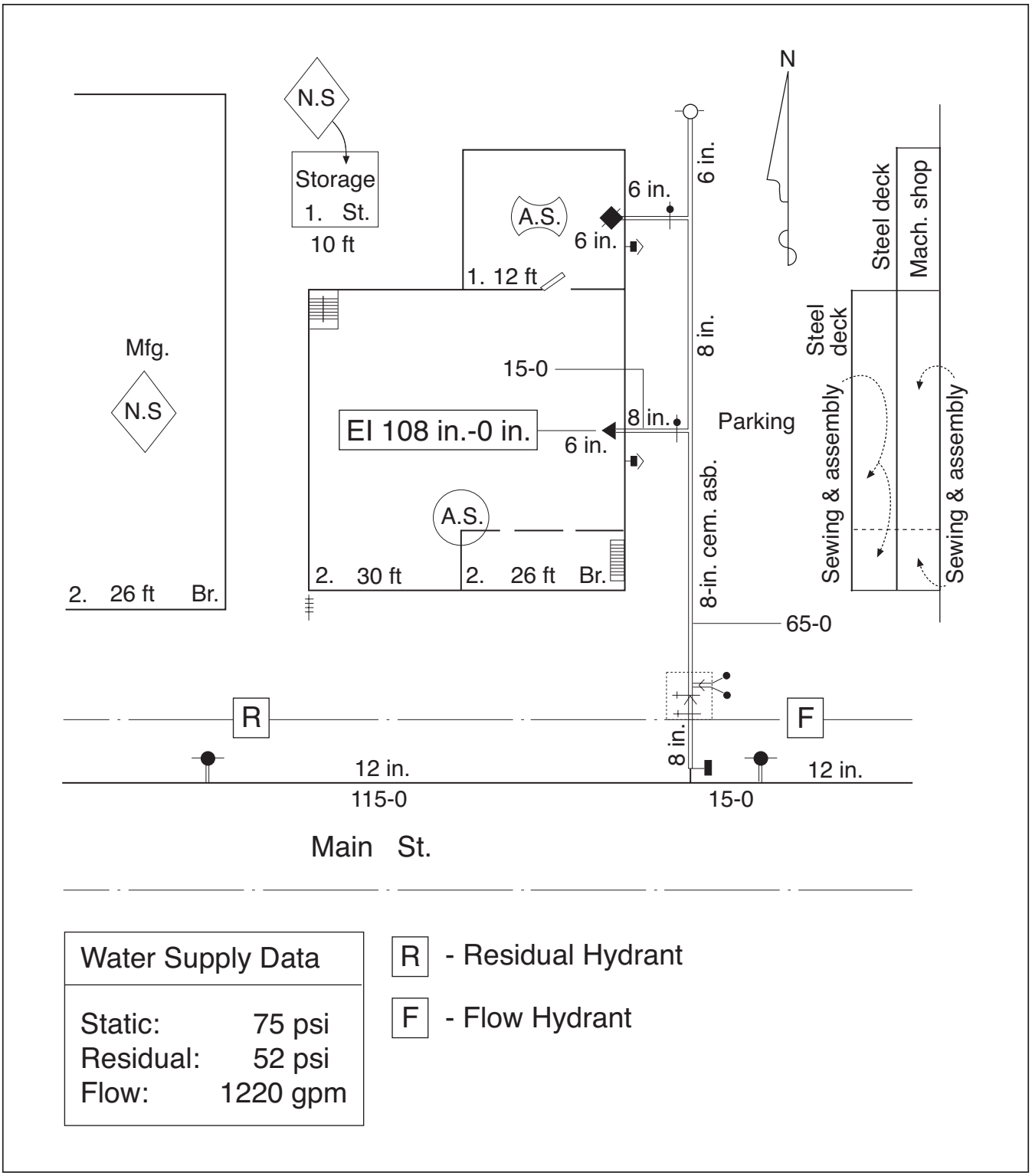

EXHIBIT /0 Sample Flow Test Report *(Continued).*

Copyright 2013 National Fire Protection Association (NFPA). Licensed, by agreement, for individual use and single download via NFCSS All Access on June 6, 2013 to GATEWAY TECH COLLEGE for designated user 0171780. No other reproduction or transmission in any form permitted without written permission of NFPA. For inquires or to report unauthorized use, contact licensing@nfpa.org. This NFCSS All Access subscription expires on 12/31/2013.

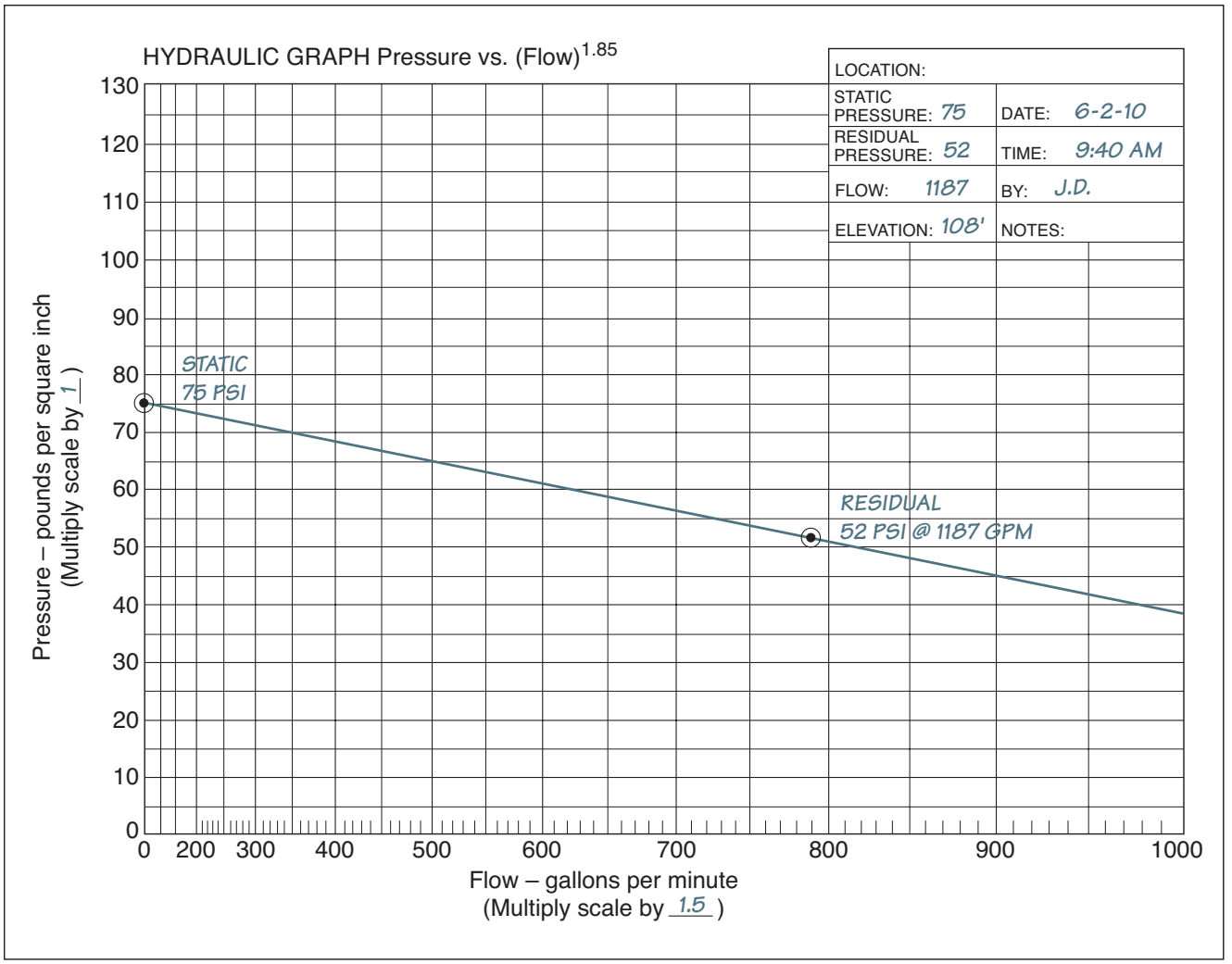

EXHIBIT /0 Sample Flow Test Report *(Continued).*

Copyright 2013 National Fire Protection Association (NFPA). Licensed, by agreement, for individual use and single download via NFCSS All Access on June 6, 2013 to GATEWAY TECH COLLEGE for designated user 0171780. No other reproduction or transmission in any form permitted without written permission of NFPA. For inquires or to report unauthorized use, contact licensing@nfpa.org. This NFCSS All Access subscription expires on 12/31/2013.

C.4.11.5

Due to changes in the water system, the water available for fire protection at a given location may change over time, so the flow test should be repeated. Waterflow test data should not be used for design purposes if the data are more than 1 year old. NFPA 25, *Standard for the Inspection, Testing, and Maintenance of Water-Based Fire Protection Systems*, requires a flow test of underground piping every 5 years to evaluate the internal condition of the system piping. Therefore, all subsequent testing should be documented and retained for comparison to previous results.

D.4

In accordance with Section D.4, the hydrant in Exhibit 23 should be rated as Class AA, since its capacity is greater than 1500 gpm (5680 L/min).

D.5.1.2

In accordance with D.5.1.2, the bonnet and nozzle caps of the hydrant in Exhibit 23 should be painted light blue to indicate that the hydrant is rated as a Class AA hydrant.